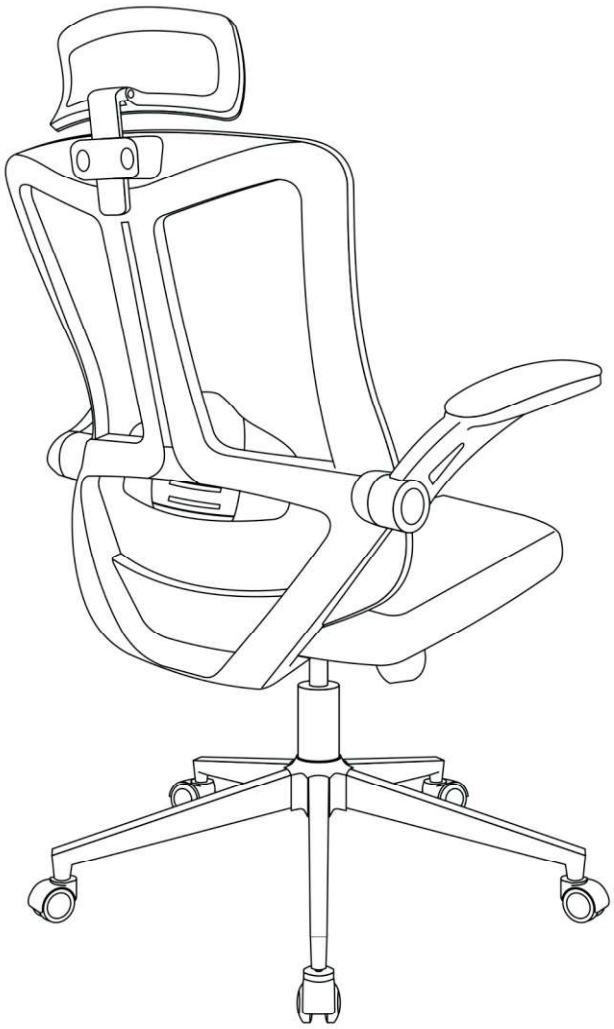

Ergonomic Office Chair

PARTS

① (x1)	② (x1)	③ (x2)
Back 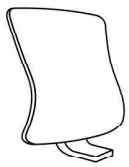	Seat 	Armrest 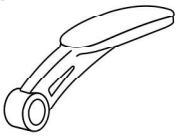
④ (x1)	⑤ (x1)	⑥ (x1)
Chassis 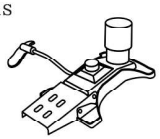	Cylinder 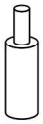	Chair Base 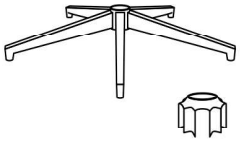
⑦ (x5)	⑯ (x1)	
wheels 	Headrest 	

		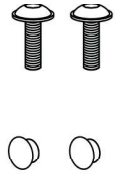	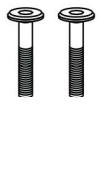	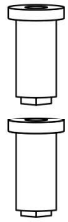	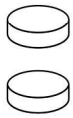	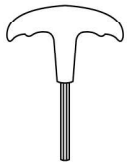
⑧ **Chassis M6*25*4PCS**	⑨ Behind the Chassis M6*40*4PCS	⑮ **Headrest M6*35*2PCS**	⑪ M8*65*2PCS	⑫ 2PCS	⑬ 2PCS	⑭ **Tool**

⑩ spare screw

ASSEMBLY STEPA

1 **Align the wheels with the leg, and put the gas rod on it.**

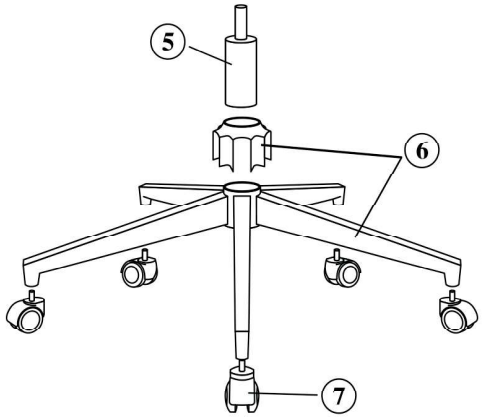

5	x1
6	x1
7	x5

2 **The tension knob must be in front of the seatcushion, otherwise it will lean forward.**

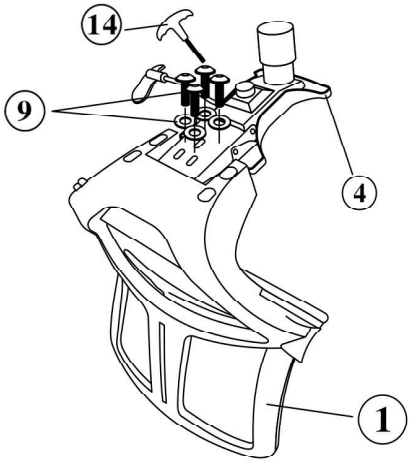

1	x1
4	x1
9	x4
14	x1

3 **Please make sure that all the gaskets be used.**

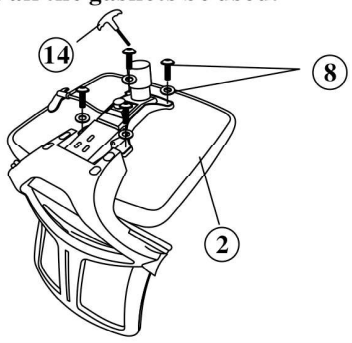

2	x1
8	x4
14	x1

4

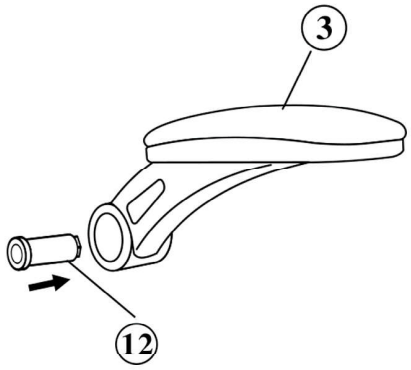

3	x2
12	x2

5

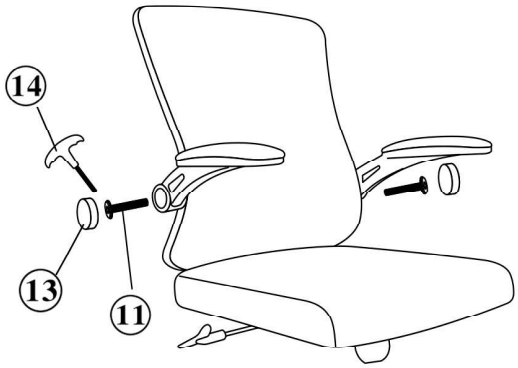

11	x2
13	x2
14	x1

6 **Assemble the headrest and armrests with I screws and put up cover.**

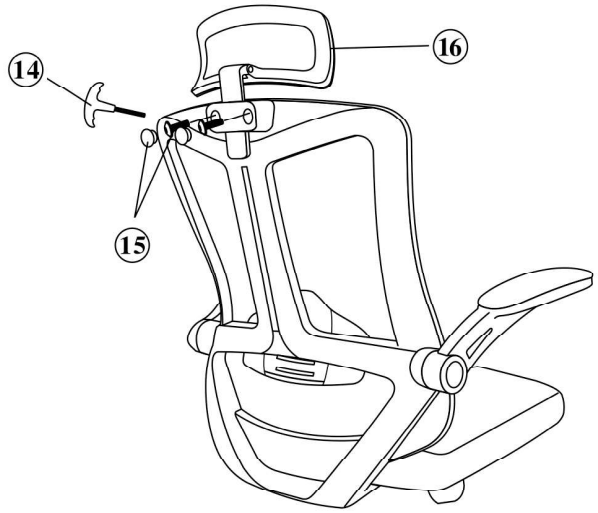

⑭	x1
⑮	x2
⑯	x1

7 **When you sit on it, the gas rod will be tightened automatically under force.**

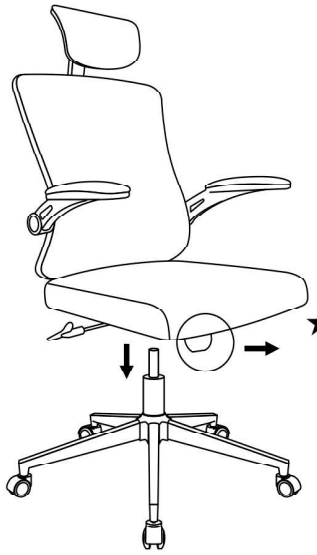

★ **Please make sure the tension kmob is in the front, otherwise it will cause the chair to tilt forward.**

MULTIFUNCTIONAL

Tilt Flexibility Control The chair can lean back easily. Pull thelever outwards to turn on the reclining function,the tilt tension knob of theadjustment mechanism can be adjusted and tightened easily.	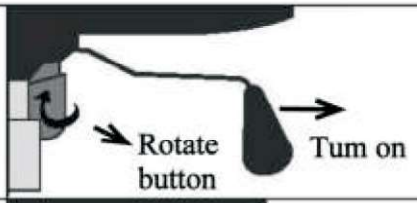
Seat Height Adjustment When you are sitting on it,you canlower the height of the chair by lifting the lever.	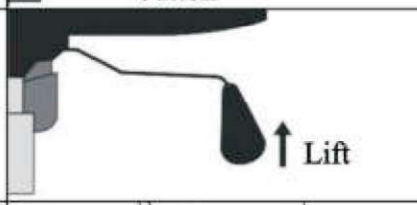
Flip-up Armrest Push it up for under-desk storage andpush it down for supporting your arm.	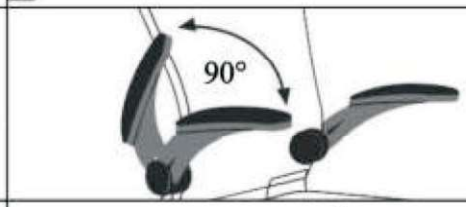
Full-Adjusted Headrest Push the button for raising it up. Adjust it to find the most comfortable angle for your head and neck.	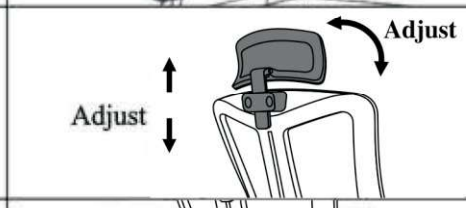
Adjustable Lumbar Support The lumbar support can be adjusted up and down to better support your waist.	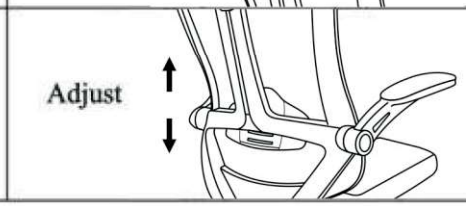

TIPS

1. Put the seat cushion on top of the carton of the swivel chair, and then slightly open the armrest and clamp it on the seat cushion for installation.

2. If the chair cannot be raised or lowered after the assembly,you could sit on it for a few minutes to add force to it.

3. The small iron wire on the wheel does not need to be taken off, it is inserted directly.If the strength is not enough, you can use a hammer to knock it in.

RETURN POLICY

- All returns must be approved by customer service departmentbefore they can be mailed back within 30 days ofreceipt.
- Unauthorized returns, all other returns are non-refundable.
- If the item arrives without damaged or defective, the buyer will berequired to be responsible for all returned shipping costs.
- When we receive all items,please repackage them in the original boxes.
- We are not responsible for any package returned to us that was not ouroriginal shipment.

Our Commitment:

If you have further questions on our product, please feel free to contract us.

Warranty Card

The warranty periods and warranty services referred to above are intended as a guide only and variations may occur. If there are differences between the warranty card and information included with the product and the information shown above, the warranty card and information included with the product shall apply.
The warranty periods apply from the first date of purchase of the product. To obtain warranty service, the original proof of purchase will be required and any serial number affixed to the product must be complete and undamaged.
The warranty covers defects in materials and workmanship. The warranty may not apply to consumable items included with or in the product, which may have a reduced or no warranty period.
The warranty card and warranty information included with the product will state specific exclusions to the warranty (e.g. where a defect is caused by misuse or unauthorised repair of the product) which must be checked before requesting service under the warranty.

CARE & MAINTENANCE

1.Do not put hot items on or near the furniture. Keep away from sources of ignition.
2.Children should not climb or jump on the furniture.
3.Do not clean the furniture with harsh cleansers or polish. Stains may be removed by using mild soap solution and damp cloth.
4.To obtain the longest life span of your outdoor products, minimizing the extended exposure to direct rain, snow, sunshine is recommended. Whenever possible, cover the products and/ or place under patio umbrellas or awnings
5.Manufacturer and seller expressly disclaim any and all liability for personal injury, property damage or loss, whether direct, indirect or incidental, resulting from the incorrect attachment, improper use, inadequate maintenance, or neglect of this product

Thank for your purchase!