OUTDOOR METAL DOG HOUSE

ASSEMBLY MANUAL

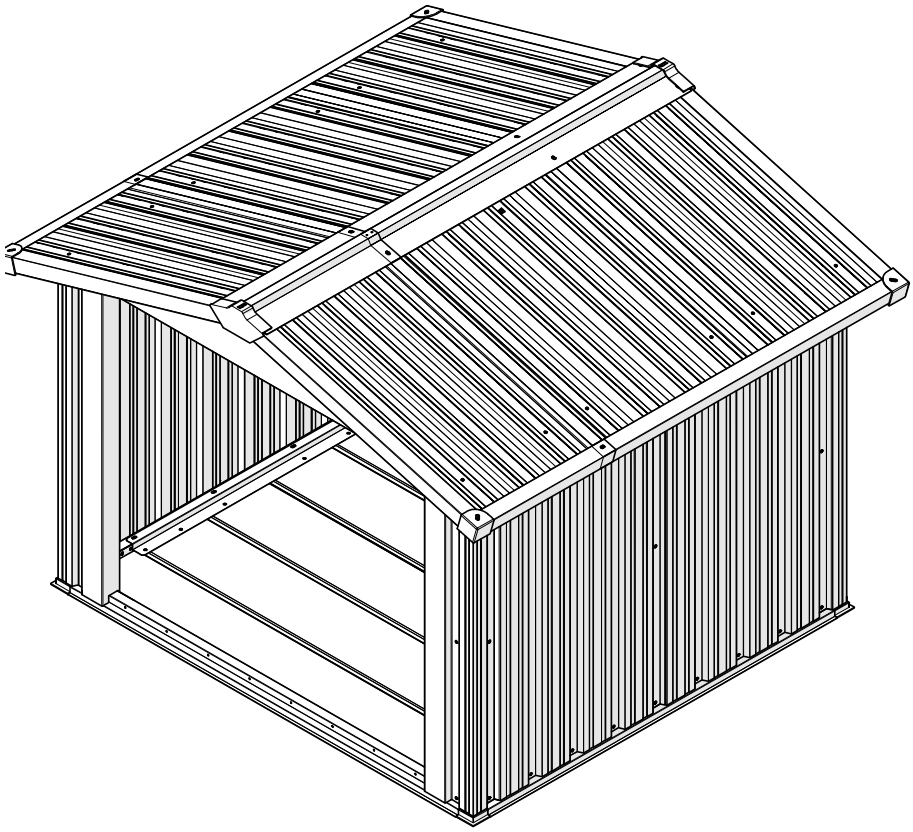



This structure is intended for temporary outdoor storage use only. It is not designed to withstand heavy snow and wind loads and does not come with engineering drawings.
To ensure suitable for your specific weather needs, it is your responsibility to verify their appropriateness for your intended use and local weather conditions, especially in areas prone to severe weather.rainy days.

- Please read and understand the product manual completely before assembly
- Check against the parts list to make sure all parts are received
- Wear proper safety goggles or other protective gears while in assembly
- Do not return the product to dealer. They are not equipped to handle your requests.

INSIDE THE CARTON

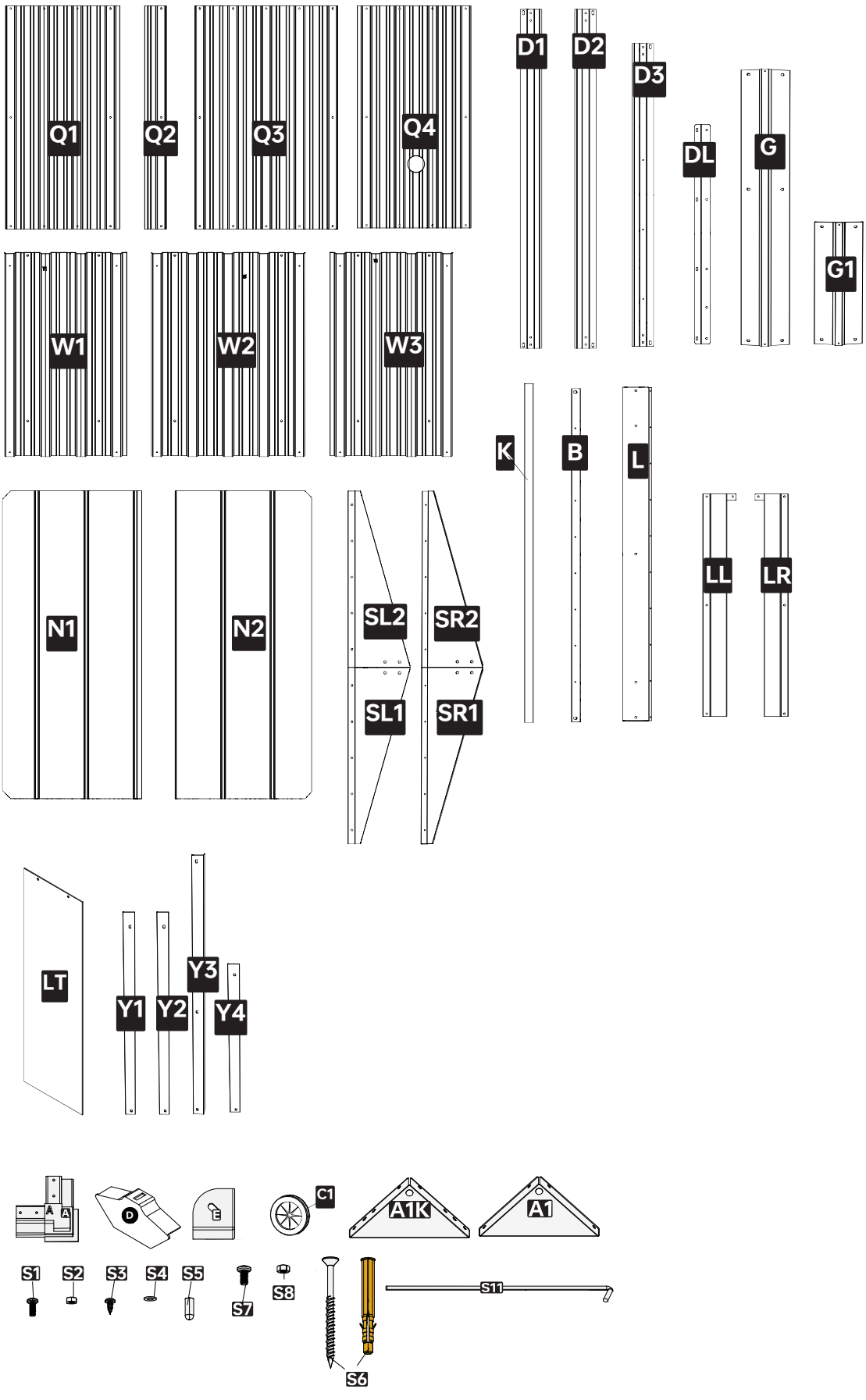

Part	Qty
Q1	2
Q2	4
Q3	4
Q4	1
D1	1
D2	1
D3	2
DL	2
G	1
G1	1
W1	2
W2	2
W3	2
N1	1
N2	1
SL1	1
SL2	1
SR1	1
SR2	1
K	1
B	2
L	2
LL	1
LR	1
LT	4
Y1	2
Y2	2
Y3	2
Y4	2
A	4
D	2
E	4
C1	1
A1K	2
A1	2
S1	18
S2	18
S3	194
S4	136
S5	18
S6	4
S7	17
S8	17
S11	4

01 Getting Started

Thank you for buying our Dog house. Please read the manual thoroughly before assembling the shed.

General Advice and Safety Guidelines

It takes at least two people three hours to finish the assembly.
Assemble the shed when the weather is on your side. Avoid windy and rainy days.
Do not assemble the shed if you are tired, have taken drugs, or under the influence of alcohol.
Always wear work gloves, shoes, and safety goggles when assembling.
Keep children and pets away from the assembly site.
Watch out for overhead power cables.
Follow the instructions step by step.
Dispose of all plastic bags and protective films.
Do not climb or stand on the roof.
Do not lean against or push the unfinished shed.

Tools

Work Gloves, Safety Goggles, Tape Measure, Level, Carpenters Square, Marker Pen, Rubber Mallet, Philips head screw driver or Power tool, M4/M5 Wrench, Ladder, Plier.
Optional: Concrete Drill with M6 Drill Bit.

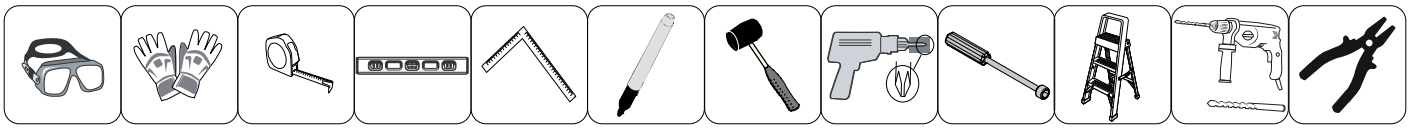

Part Checking

Put parts on a soft and clean surface, such as a blanket. This will prevent the parts from getting scratched or dented by the hard ground.
Compare the part list with the actual parts you received.
If you find any parts missing or damaged, do not assemble the shed. Contact the seller.

ABOUT THE PROTECTIVE FILM

Panels of the shed come with a thin layer of protective film. Remove the film before assembling.

ABOUT STACKED PARTS

There are cases where two parts are stacked firmly and may appear to be a whole part.

Care and Maintenance

Clean the shed once assembly is done.
Use warm water, mild detergent, and a soft sponge or cloth to clean the surface.
Clear snow from the roof top after each snowfall.
Do not store recently used grills, blowtorches, paint, etc in your shed.

02 Assembly Site

LOCATION

This dog house has a roof footprint of 1.03m (3.38ft) in length and 1.15m (3.77ft) in width. The roof dimensions are larger than the base frame dimensions. **This footprint represents the minimum ground space required to set up this shed**.

Additionally, ensure a minimum clearance of 0.91m (3ft) is maintained on all sides of the shed from walls, fences, or other structures.

Make sure there are no hidden pipes, cables, or septic tank in the ground.

TWO FOUNDATION OPTIONS

This shed must be anchored to a level and solid foundation to increase its stability.

In the package there are bolts and parts to accommodate the following foundation options:

1. Anchored to a concrete foundation.
2. Anchored into the ground.

Details about the two foundation options will be discussed in later steps.

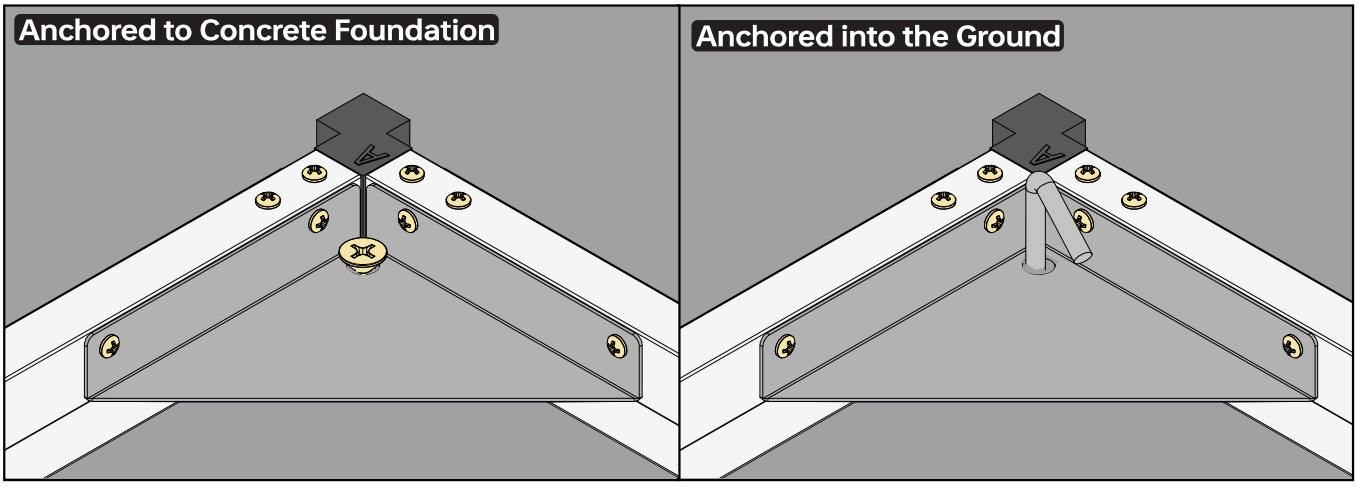

03 Base Frame

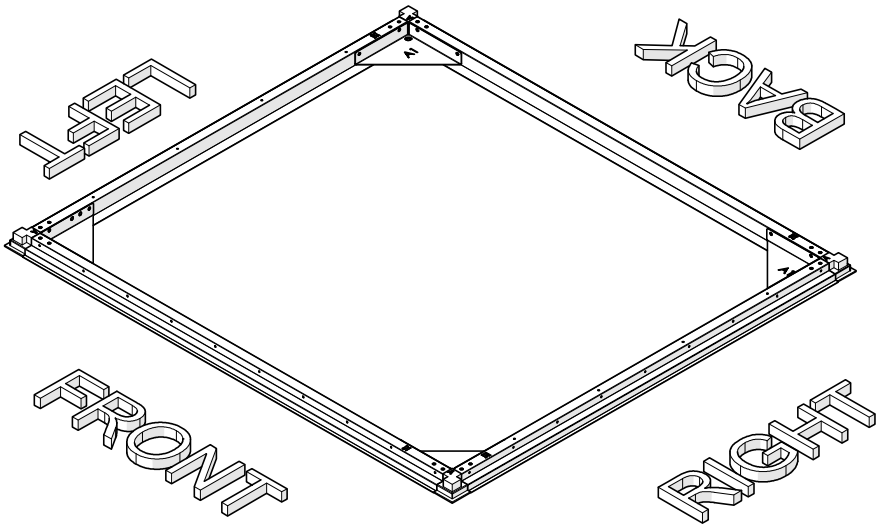

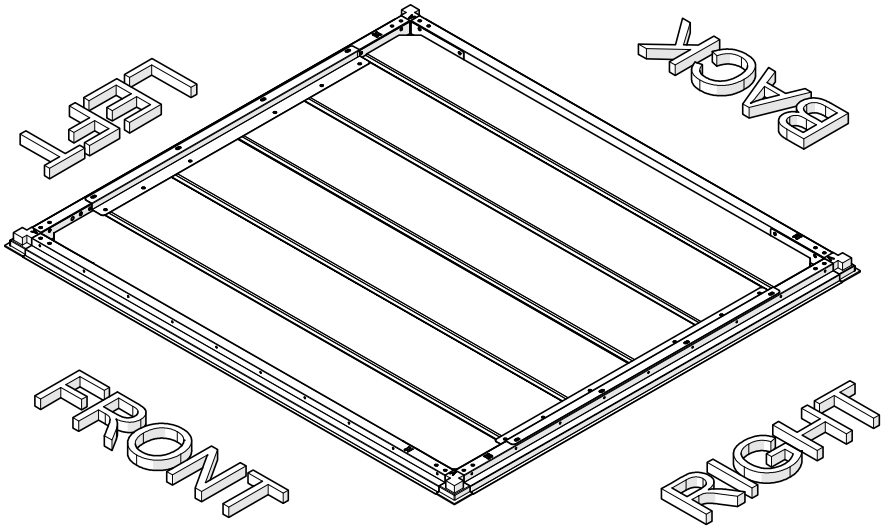

1

Part	Qty
D1	1
D2	1
D3	2
A1	2
A1K	2
A	4
S3	32

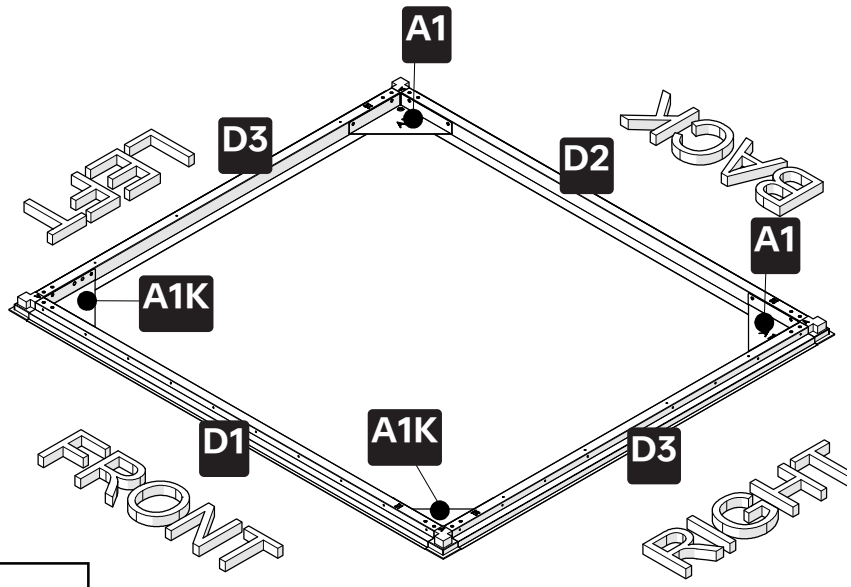

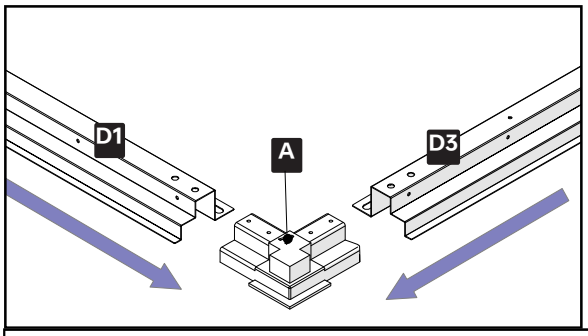

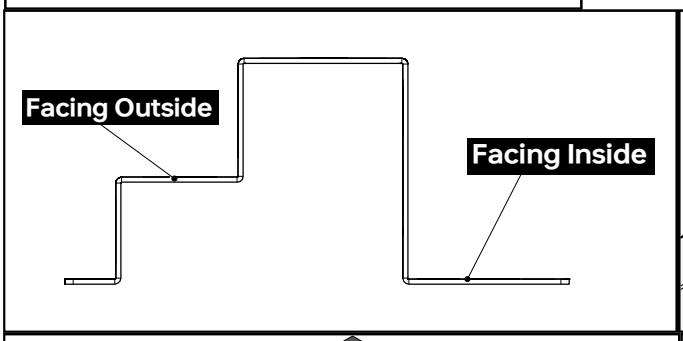

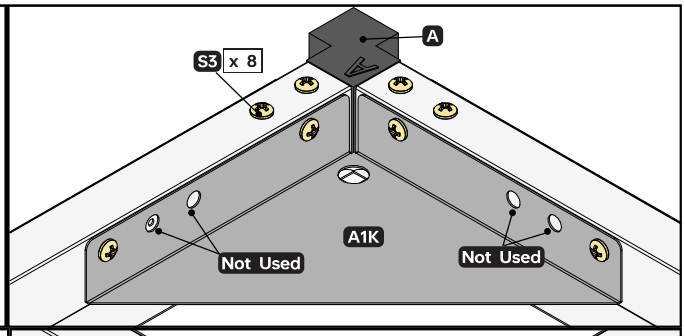

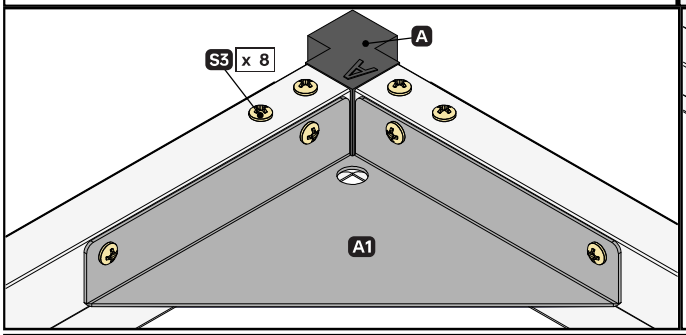

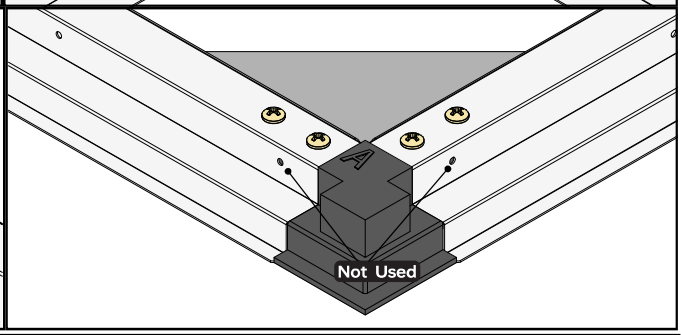

NOTE

FRAME POSITIONING (D1~D3):

Each frame (D1~D3) has a designated exterior side. Ensure this side consistently faces outward during assembly.If you encounter difficulties aligning the frames as illustrated, revisit Step 1 to verify correct initial setup.

ABOUT CORNER BRACE A1 AND A1K

A1K: Install on the back side of the structure. **A1**: Install on the front side of the structure.

Each A1K brace has four screw holes on each side. For this step: Avoid using the two middle screw holes, marked “Not Used” in the diagram.

When securing S3 screws into part A, avoid using the two screw holes that face outward. These will be used in a later assembly step.

2

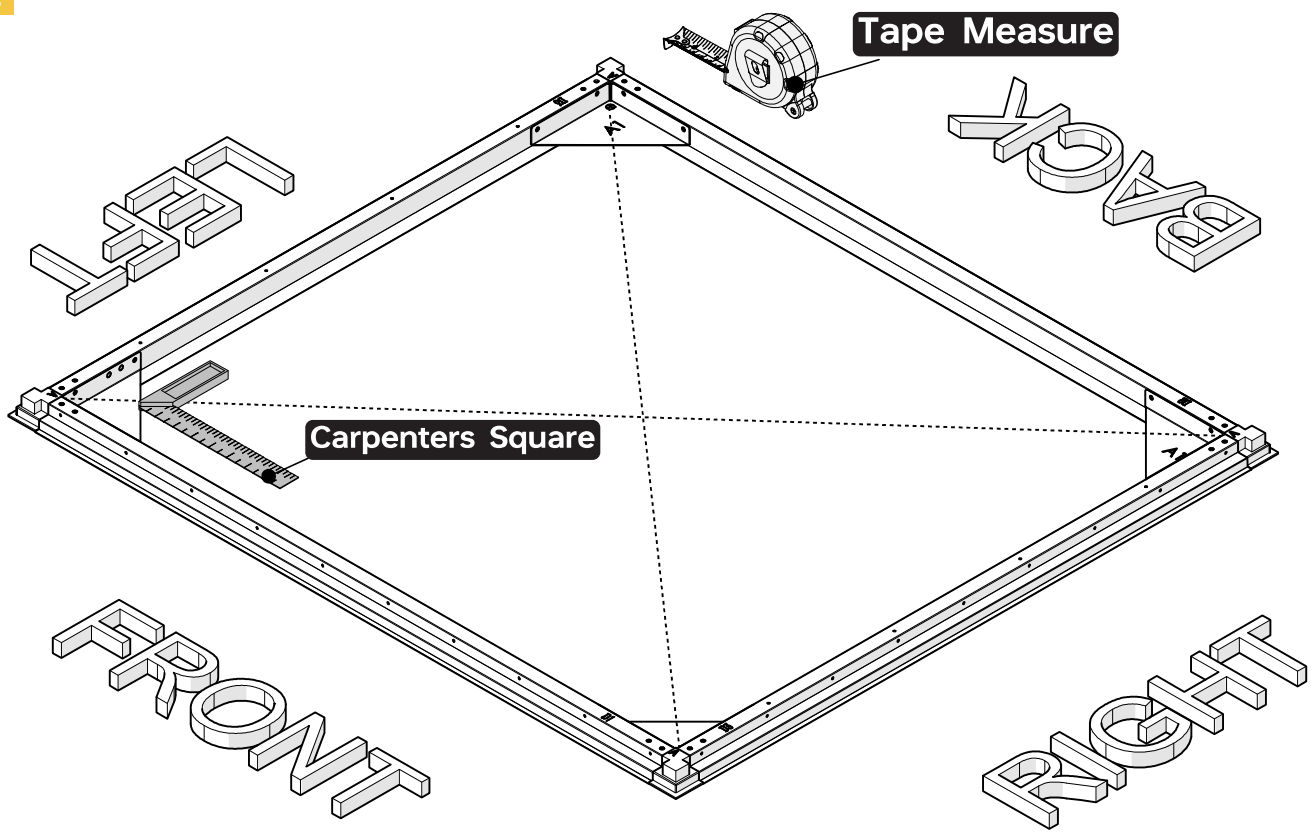

IMPORTANT

AFTER COMPLETING THE ASSEMBLY OF THE BASE FRAMES, PERFORM THE FOLLOWING CHECKS:

Squareness Check: Use a carpenters square to ensure each corner of the frame forms a right angle (90 degrees).

Diagonal Measurement Check: Use a tape measure to verify that the lengths of both diagonal lines across the frame are identical.

If the diagonal measurements differ, adjust the connections between the D1-D3 frames until the lengths are equal.

OPTION 1 ANCHORED INTO GROUND

3

Part	Qty
S6	4

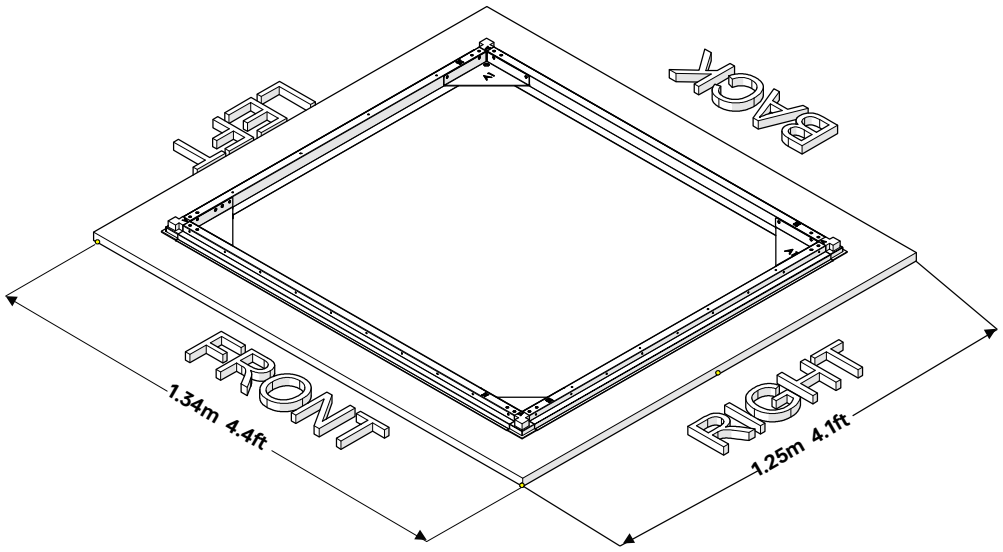

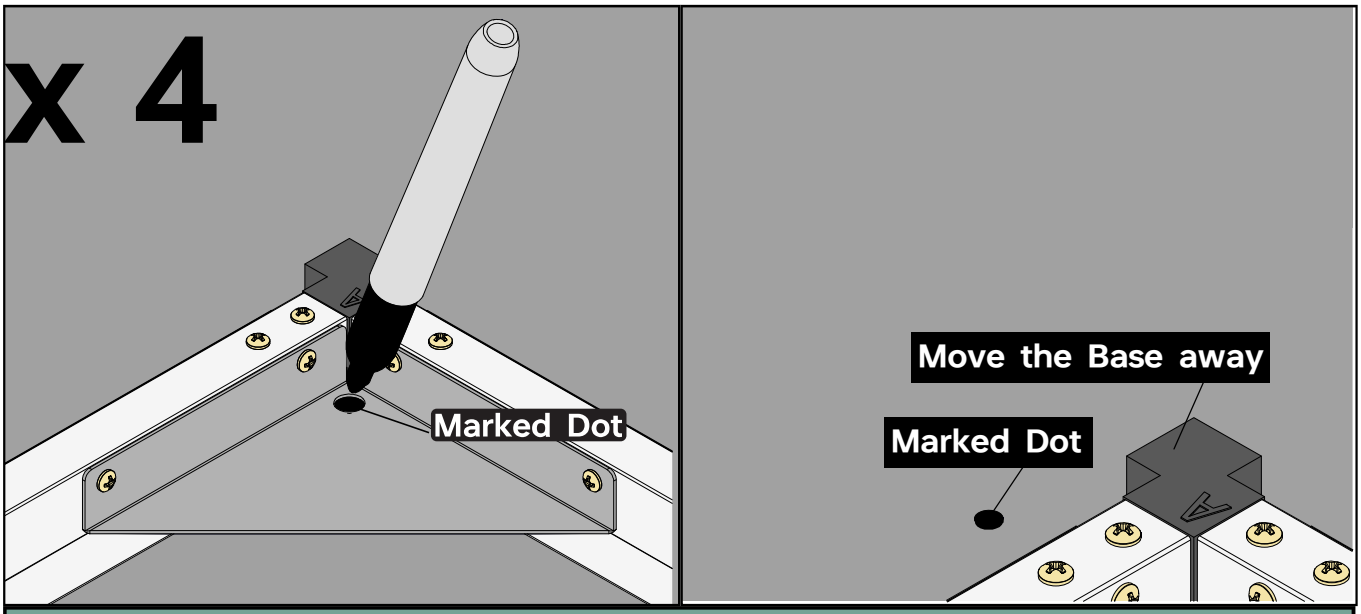

NOTE

Foundation Marking: In each corner of the base frame, use a marker pen to mark a dot through A1/A1K onto the foundation surface. Then, move the base frame away from the marked foundation.

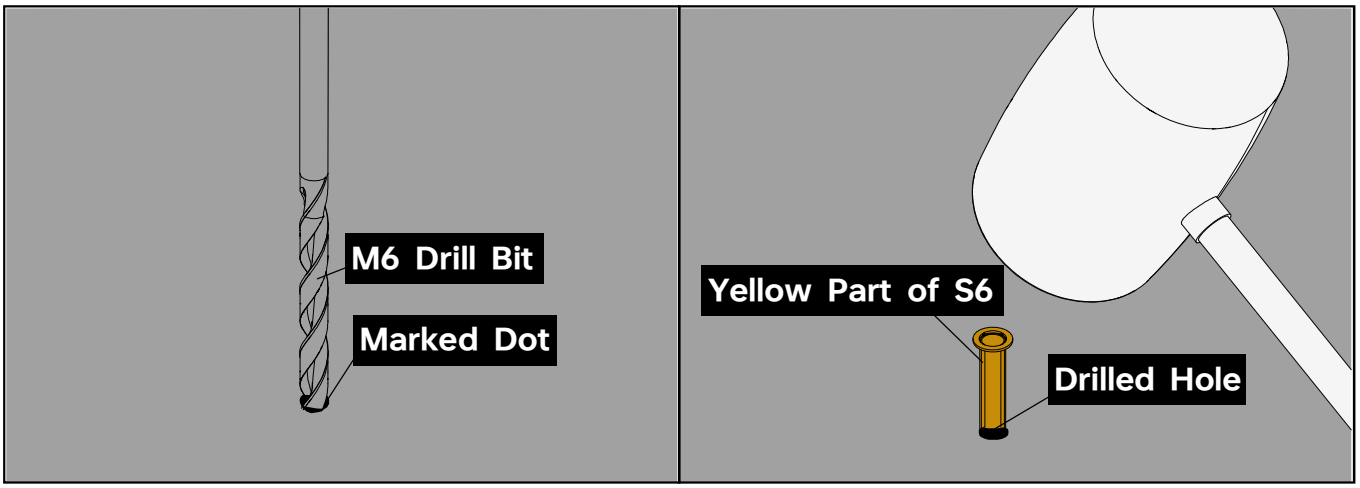

NOTE

FOUNDATION DRILLING: Using a concrete drill with an M6 drill bit, drill a hole at each of the four marked locations on the foundation. Drill to a depth of 8 cm (3.15 inches).
ANCHOR INSTALLATION: Use a rubber mallet to hammer the yellow plastic anchor component of S6 into each drilled hole.
IMPORTANT: Only use the yellow plastic anchor part of S6 in this step. Do not use the screws of S6 at this time.

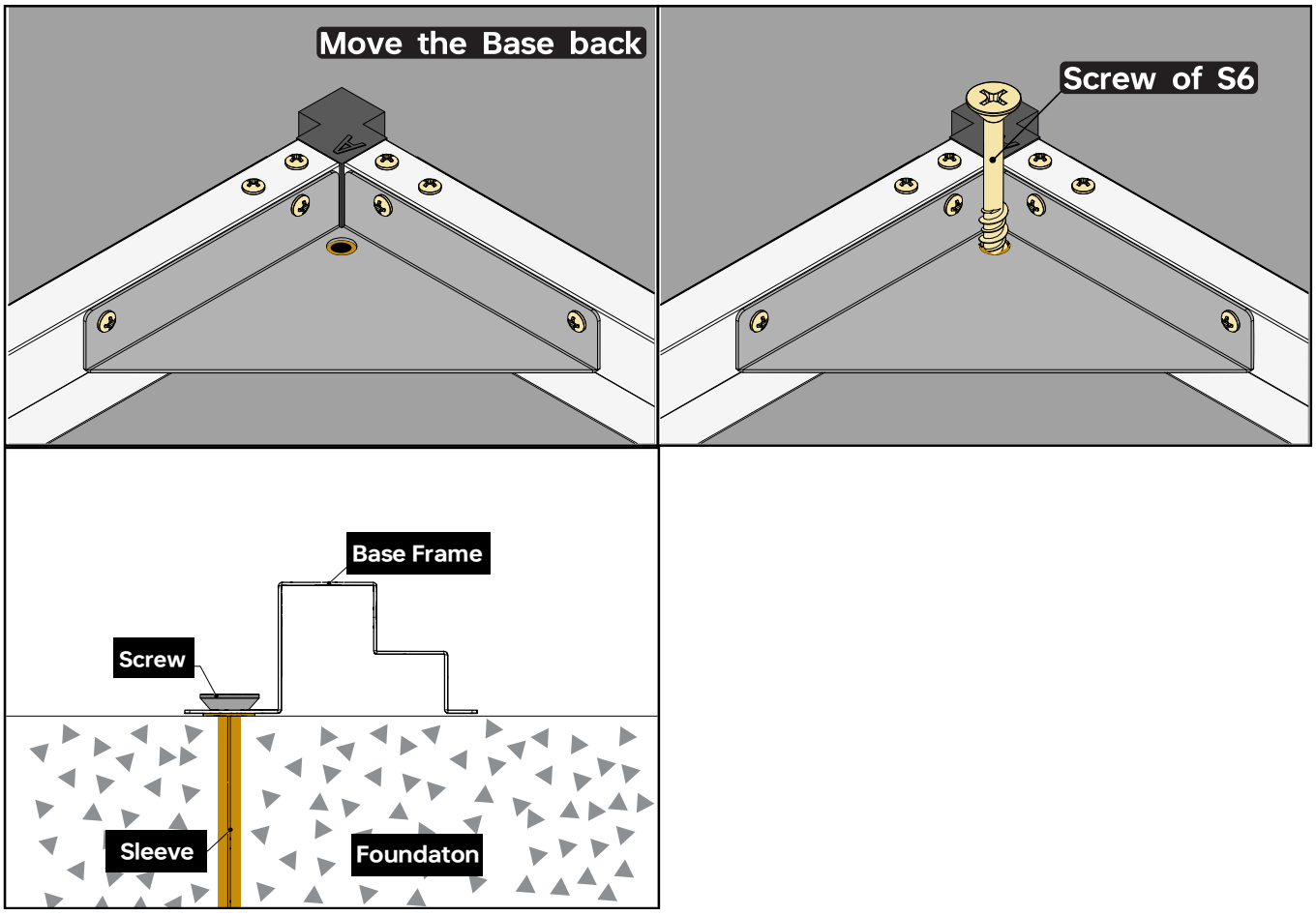

NOTE

Securing the Base: Carefully reposition the assembled base frame onto the foundation, aligning the frame holes with the installed anchors. Now, use the screw of S6 to securely fasten the frame to the foundation.

This completes Option 1.

4 OPTION 2 ANCHORED INTO GROUND

Part	Qty
S11	4

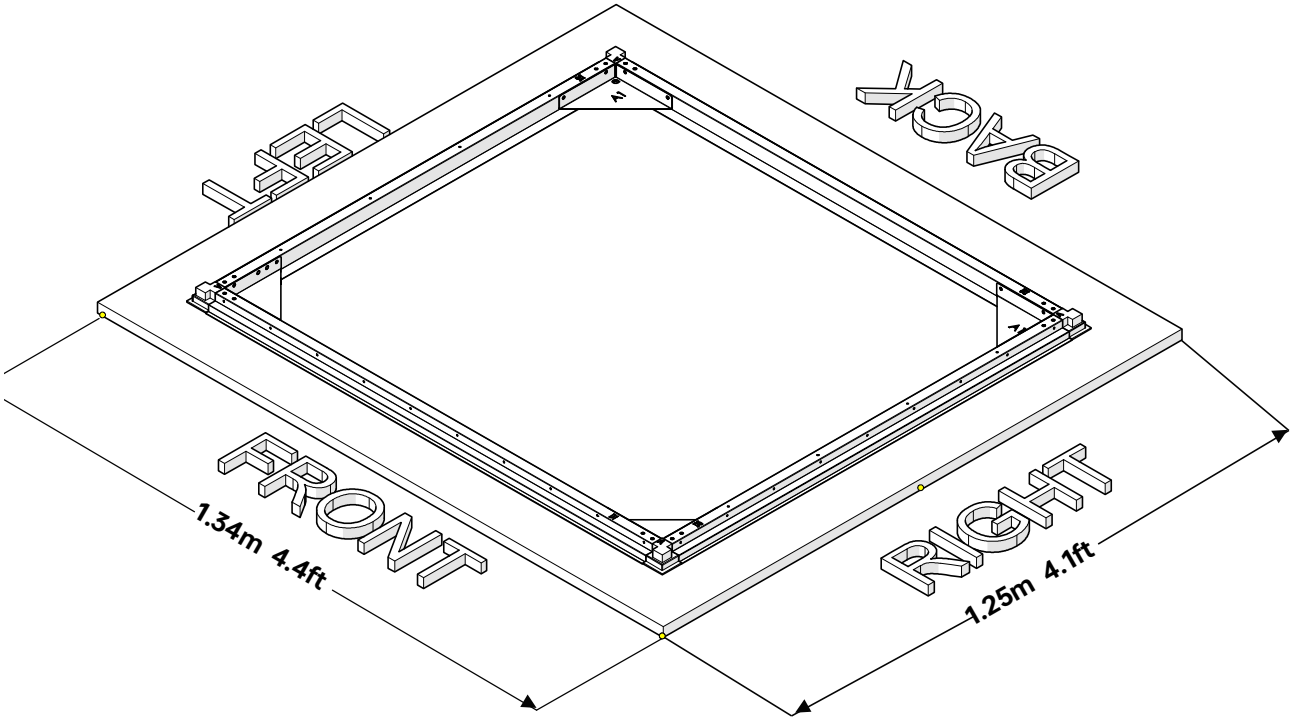

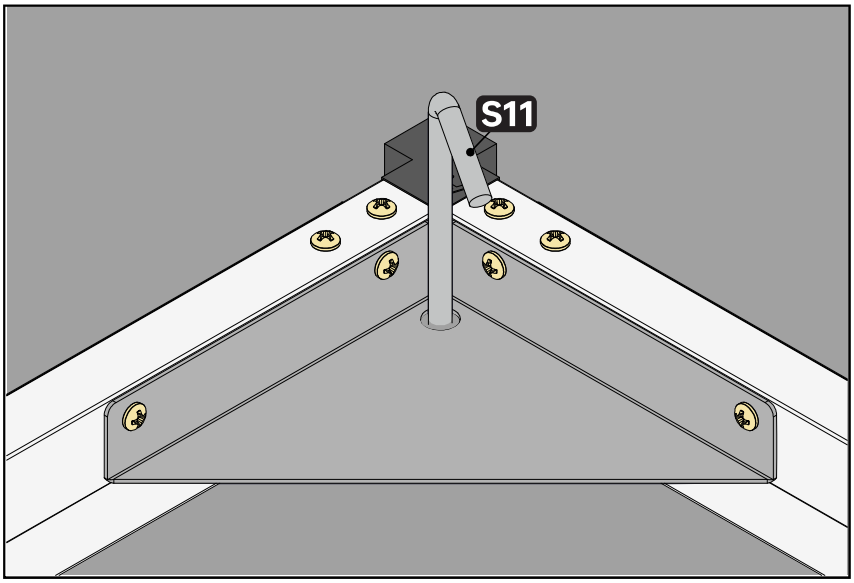

NOTE

Size: The dimensions on the illustrations above represent the minimum ground space required to set up this shed.

For this simplified foundation option, use a mallet to hammer the S11 anchors directly into the ground.

This concludes the Base Assembly chapter. In the following chapters, we will demonstrate the assembly of the remaining shed components, without showing the foundation for clarity.

5

Part	Qty
N1	1
N2	1

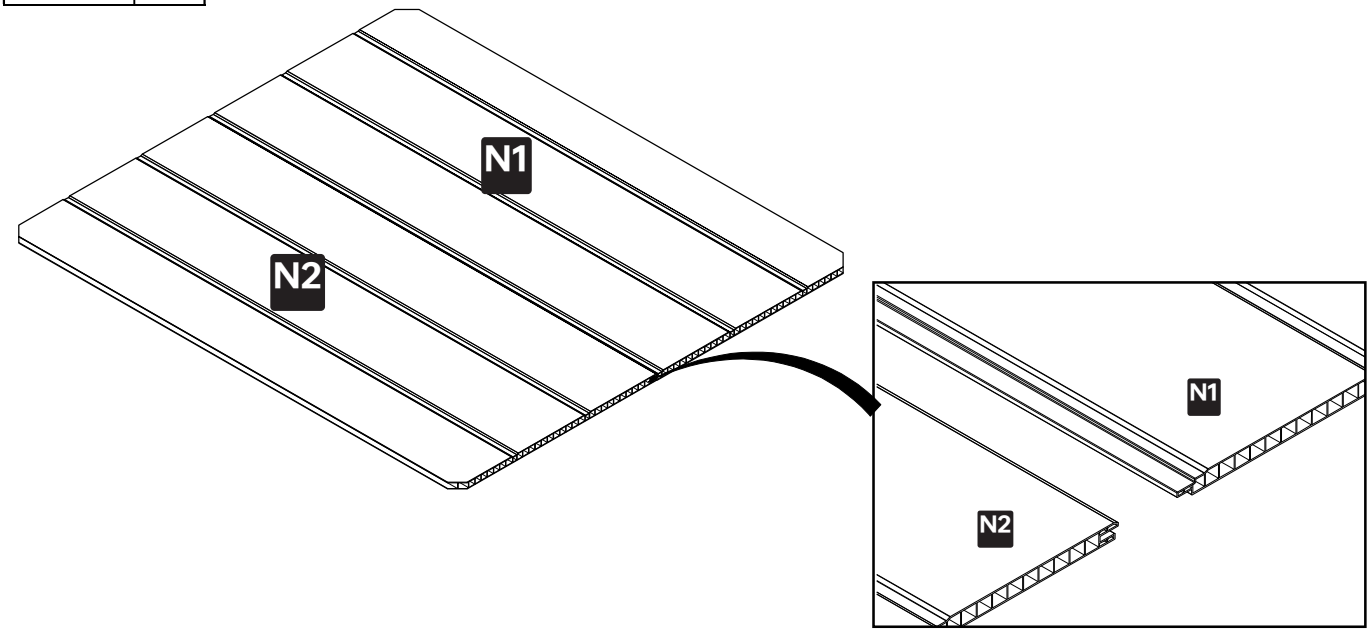

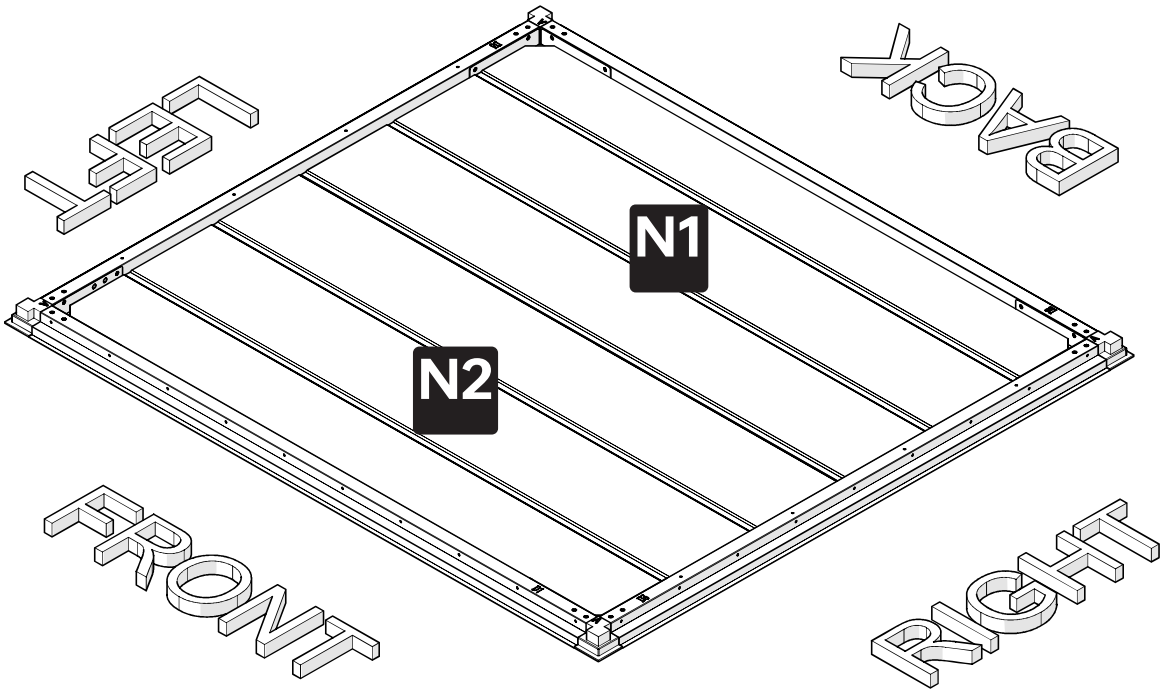

6

Part	Qty
DL	2
S3	20

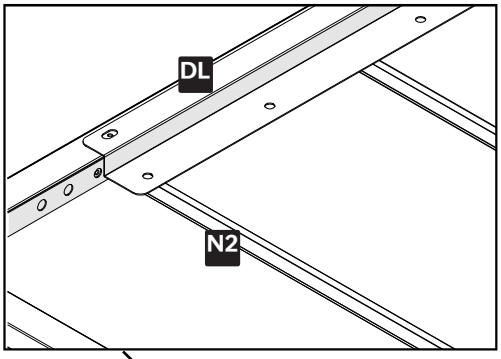

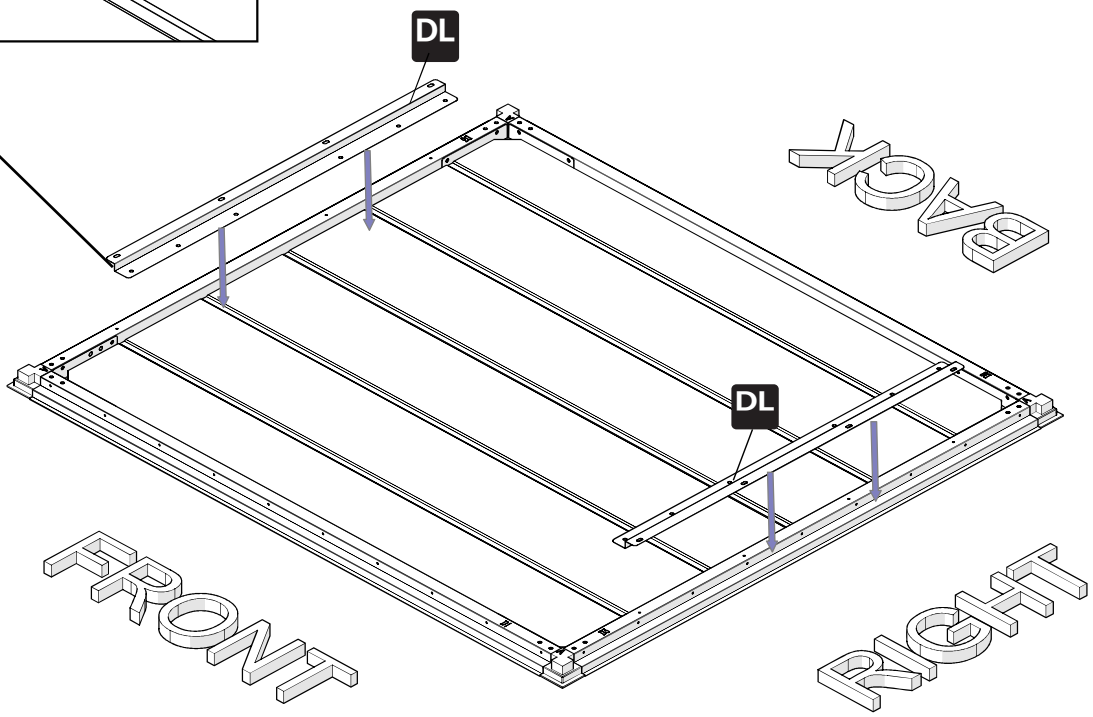

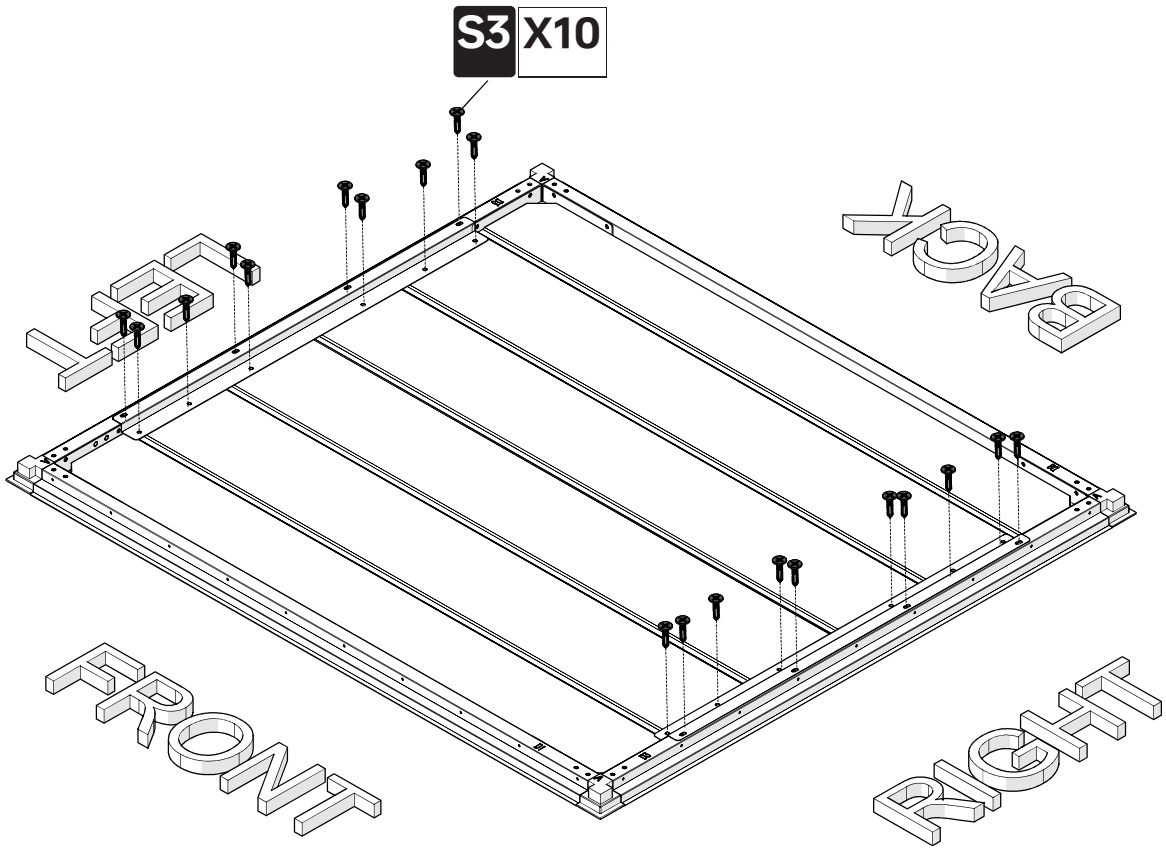

04 Wall

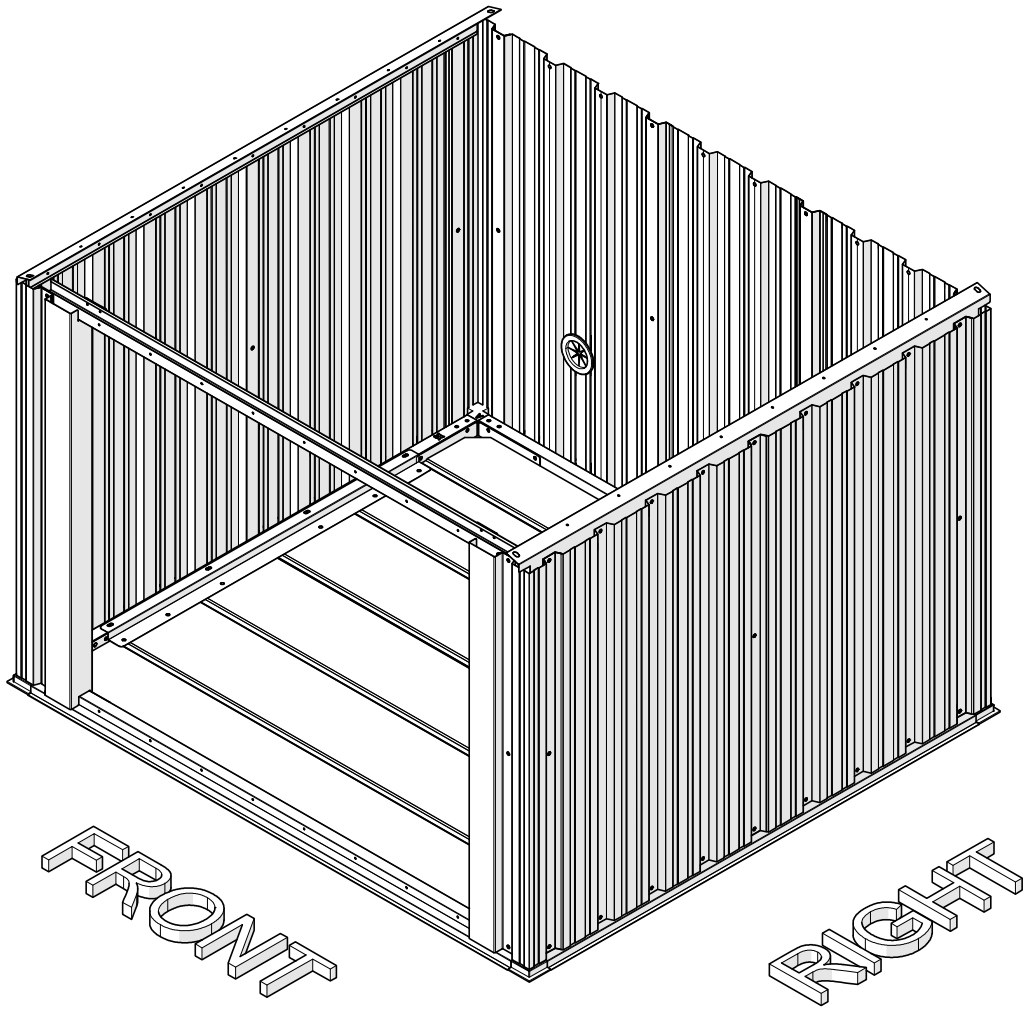

1

Part	Qty
Q2	4
Q3	4
B	2
S3	36
S4	36

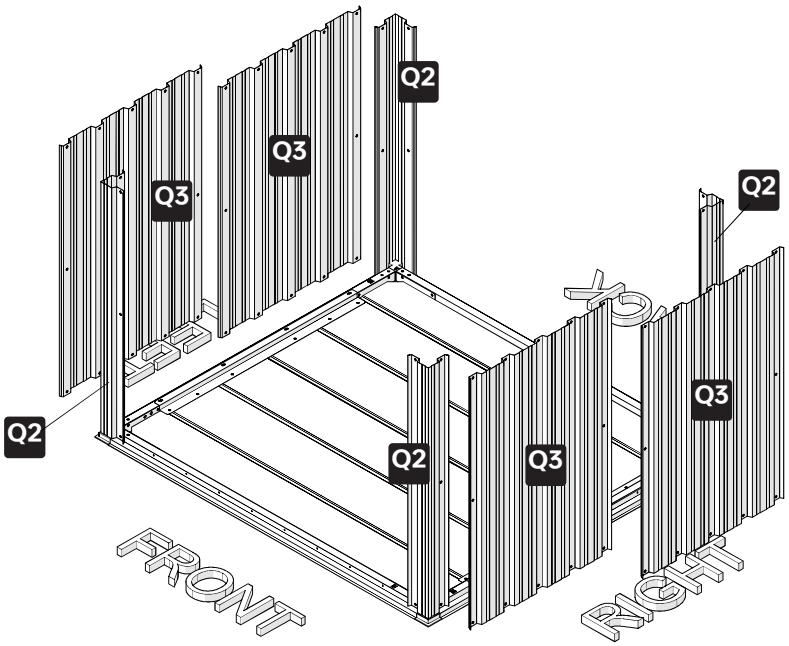

Note

ABOUT THE PLASTIC WASHER S4

Use S4 with S3 to protect panels and rainproof the shed.

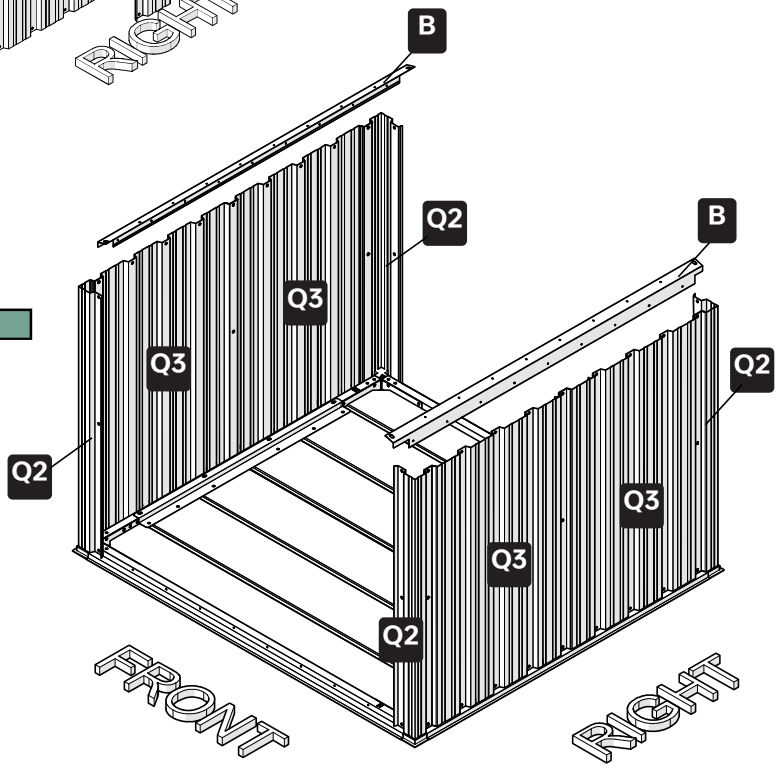

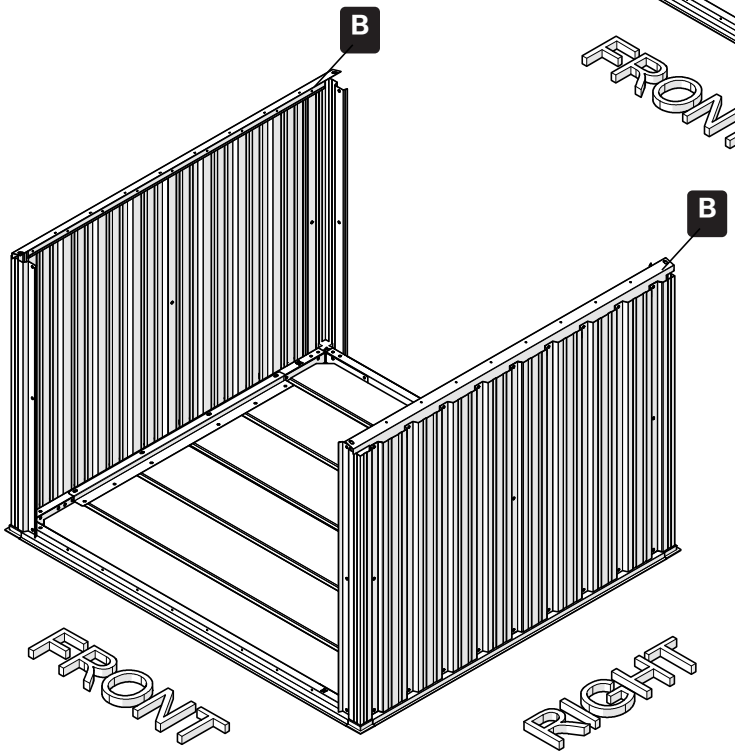

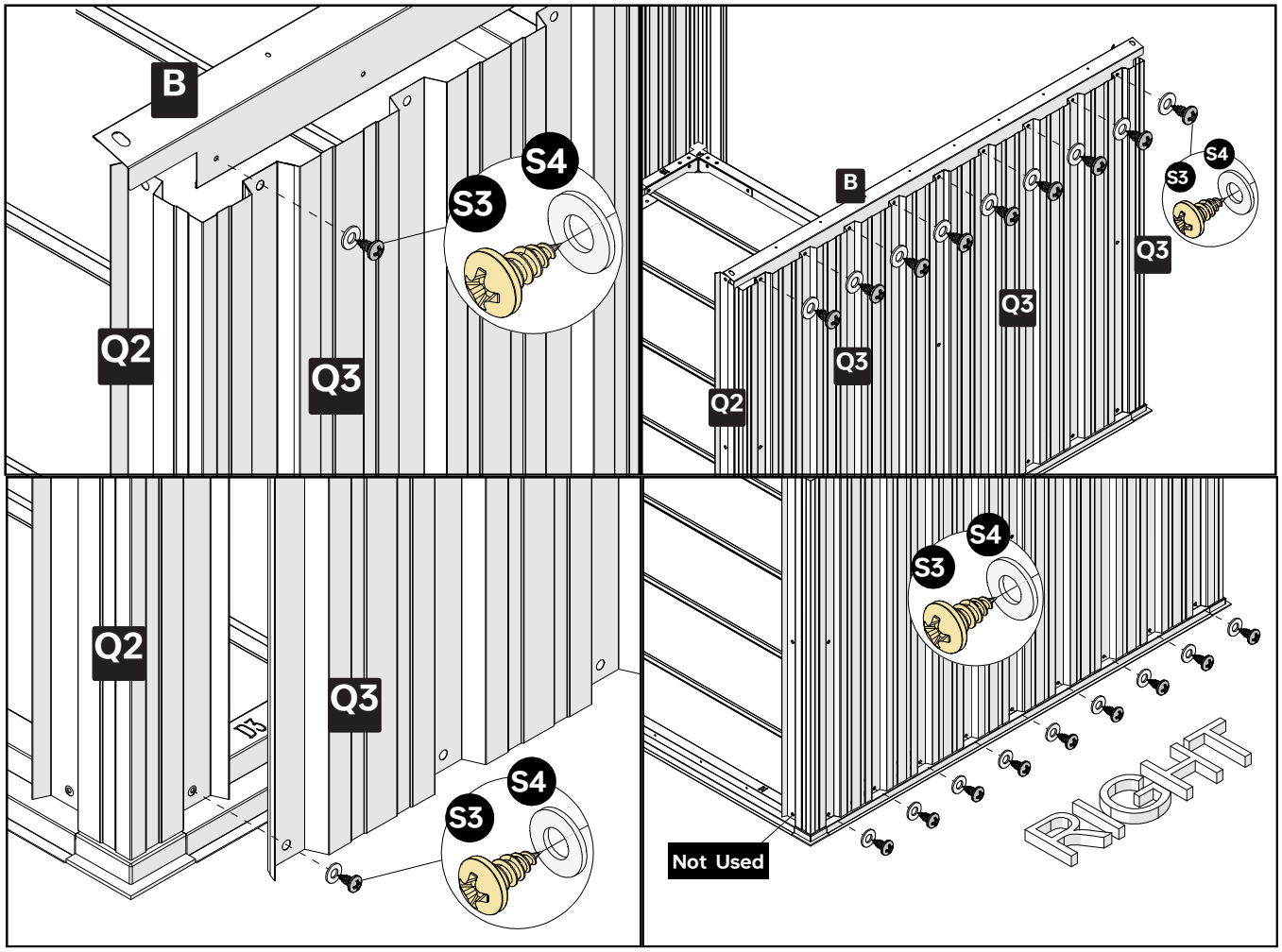

2

Part	Qty
C1	1

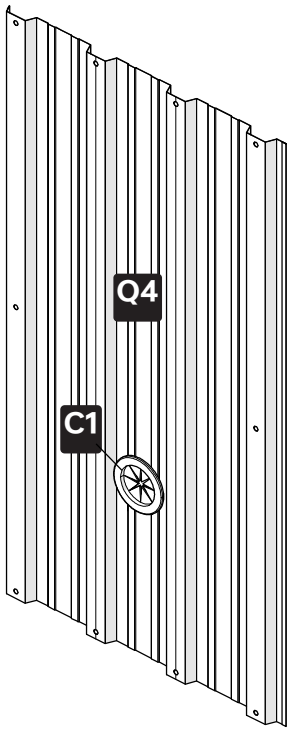

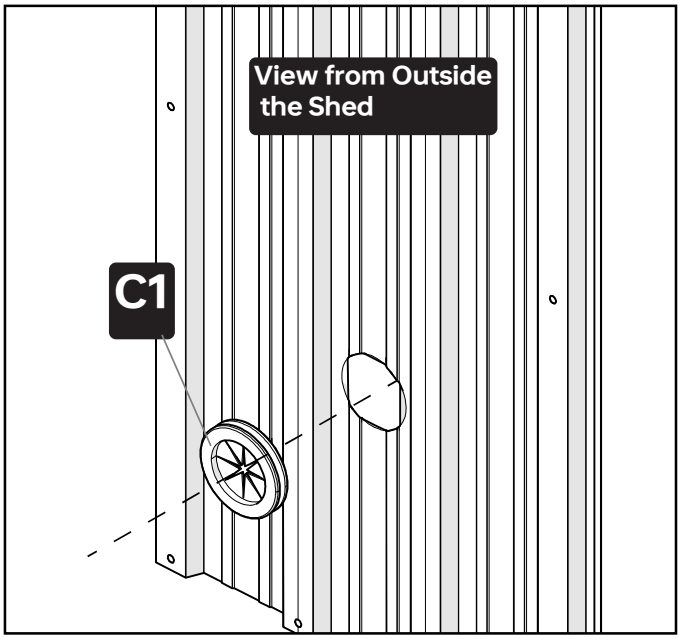

3

Part	Qty
Q1	2
Q4	1
S3	10
S4	10

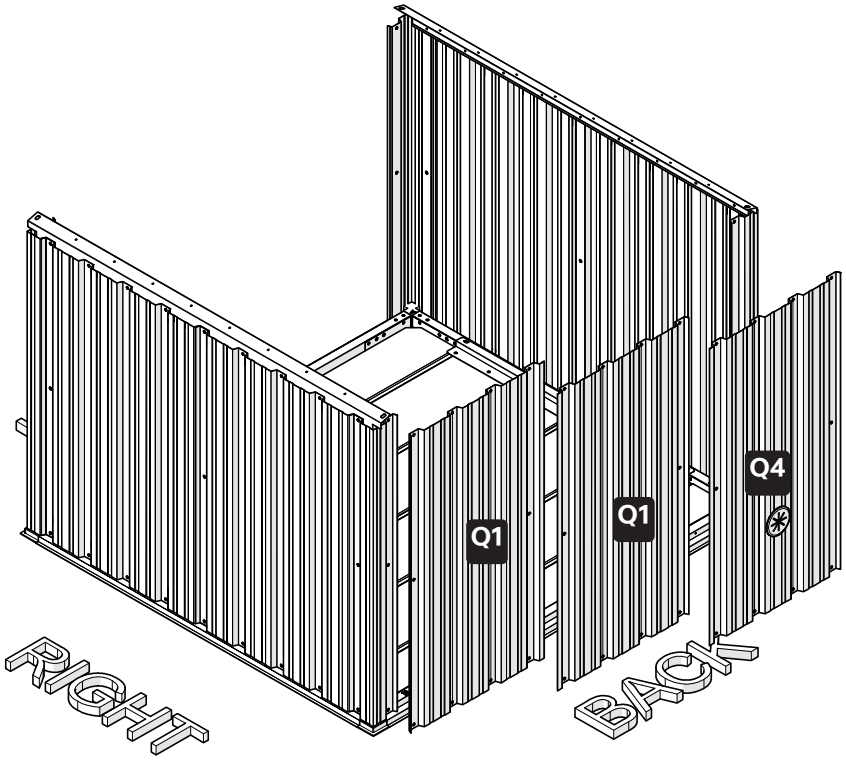

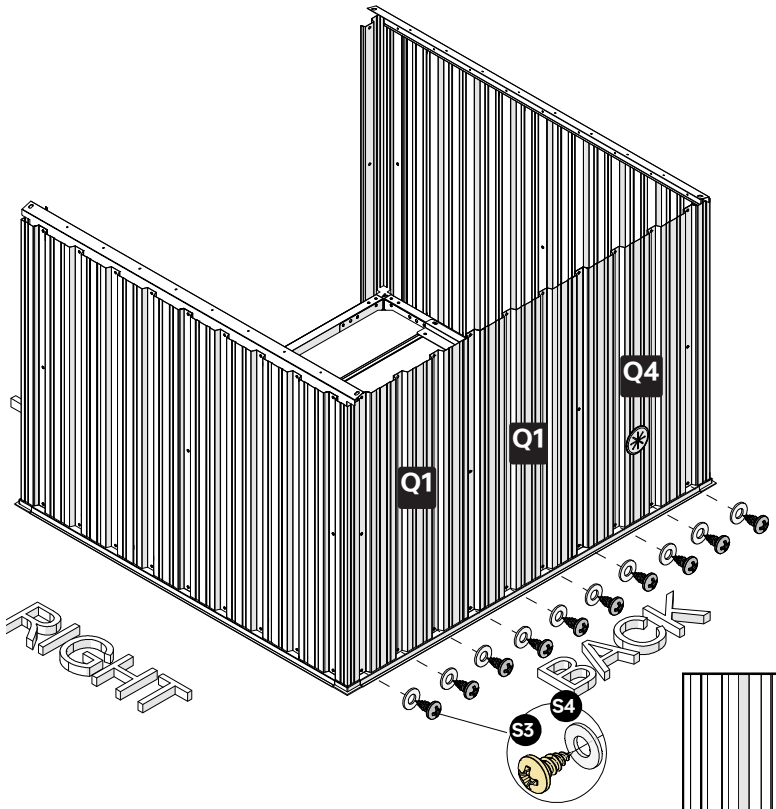

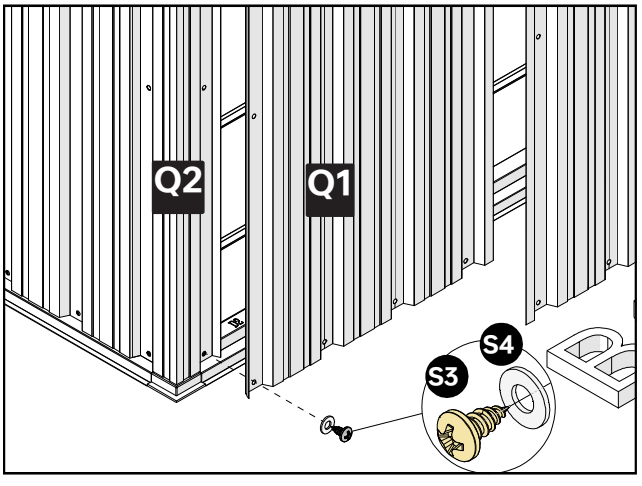

4

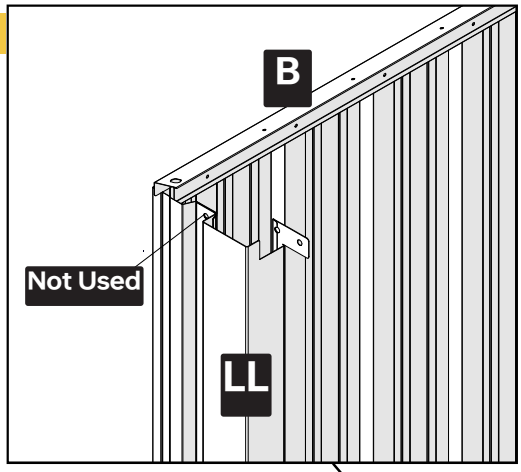

Part	Qty
LL	1
LR	1
S1	6
S2	6
S3	32
S4	32
S5	6

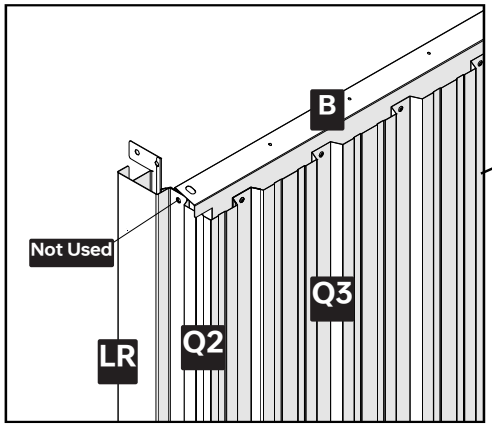

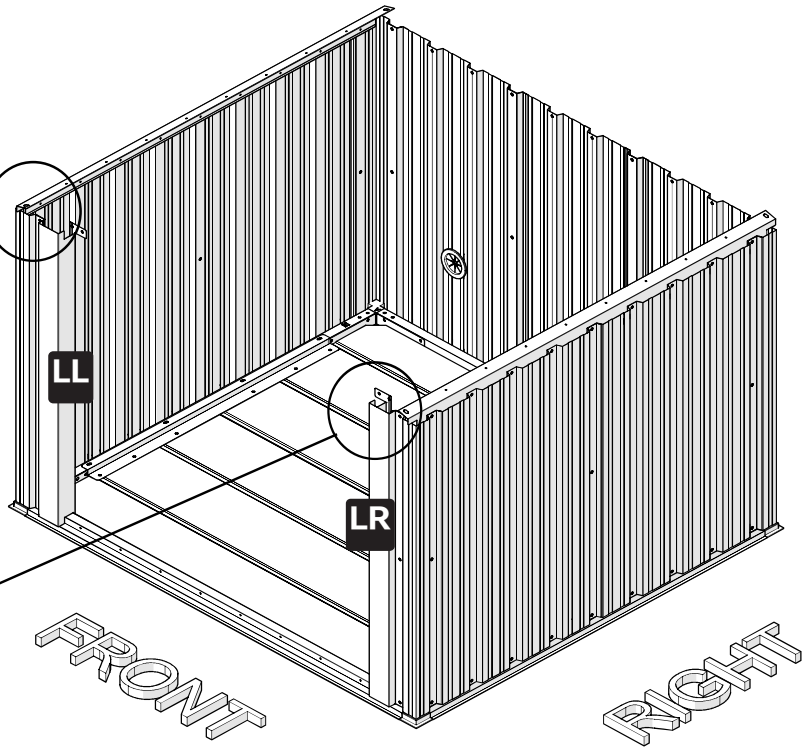

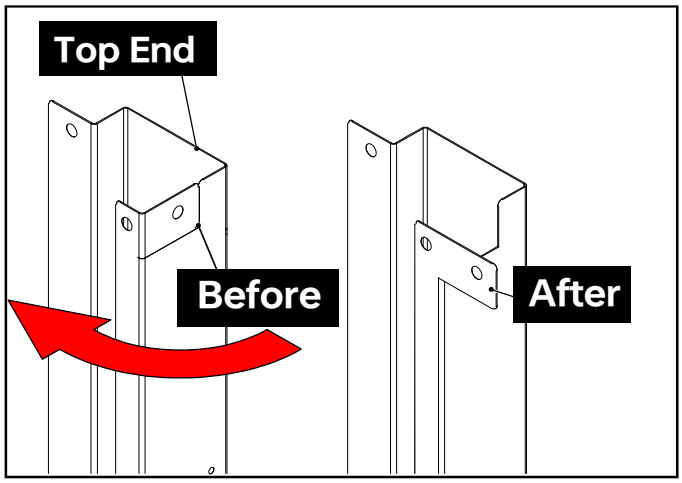

5

Part	Qty
K	1

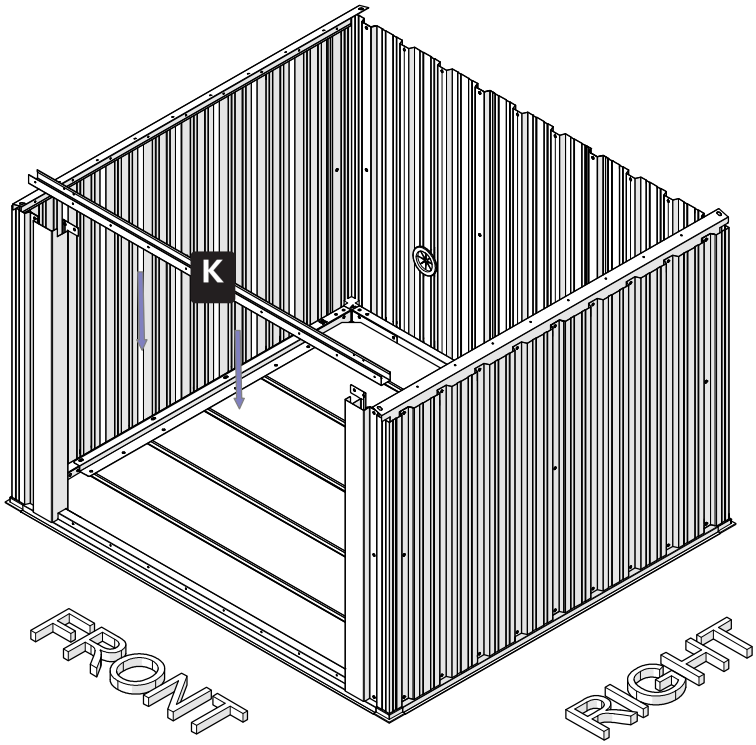

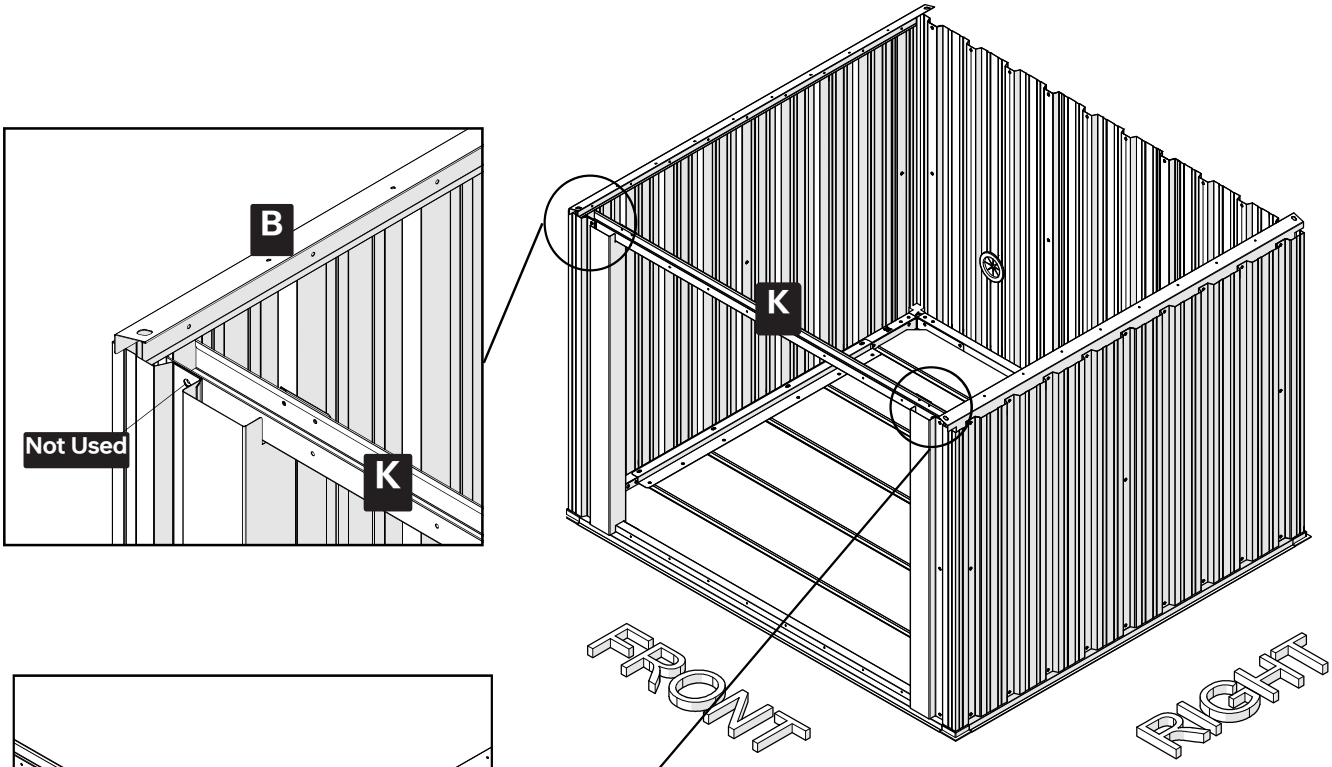

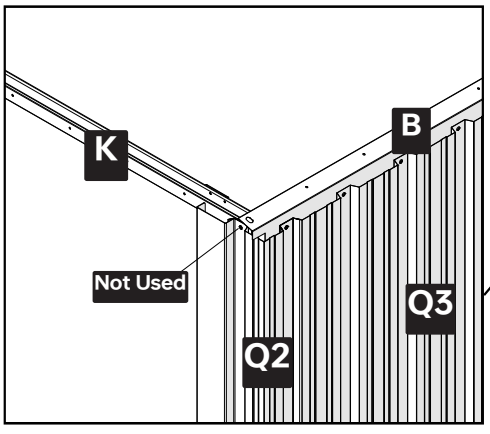

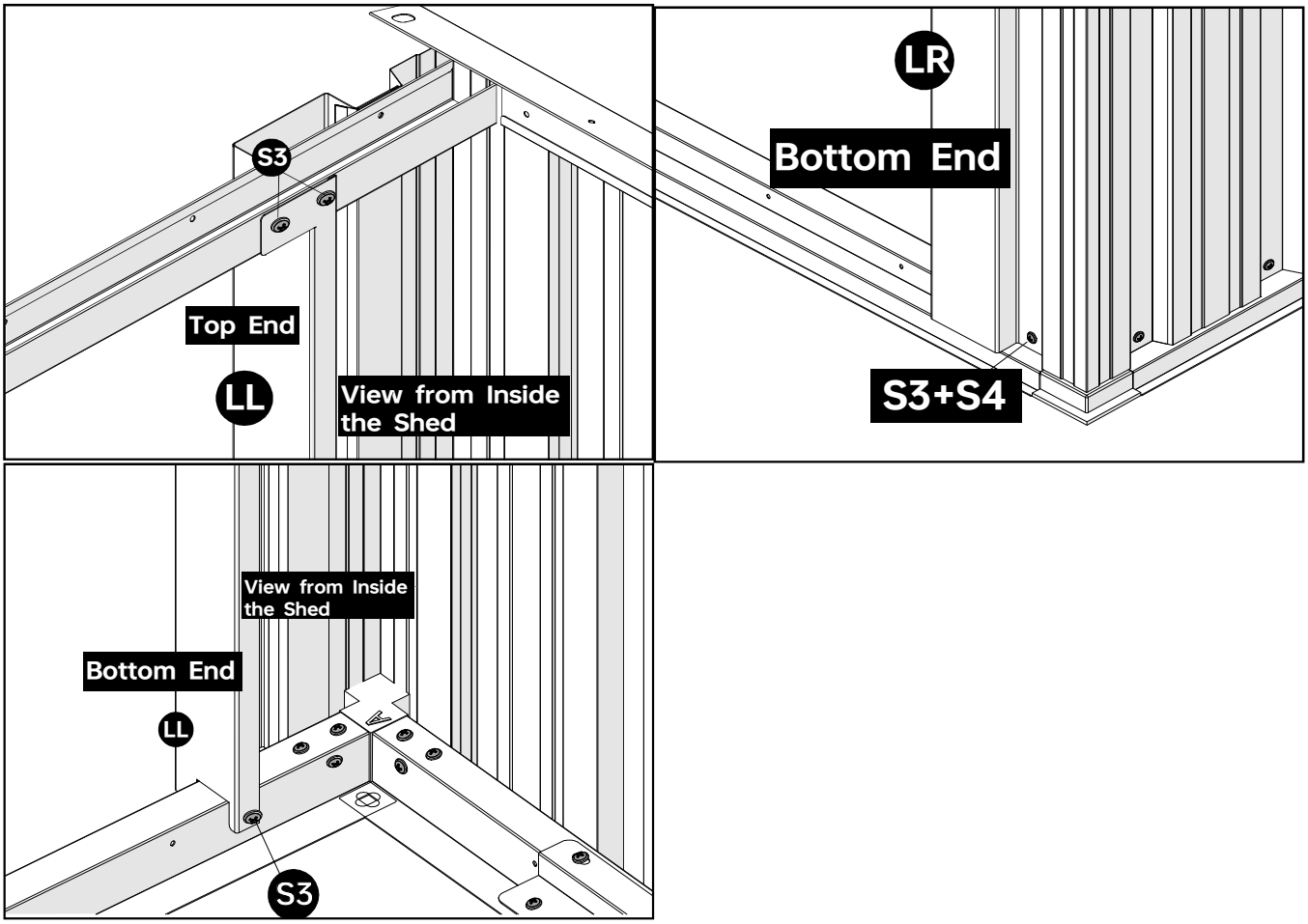

NOTE

ATTACHING LL AND LR

This section details the attachment of part LR to the shed. The same instructions apply to the attachment of part LL. **Note:** Both LL and LR have distinct top and bottom ends; it is crucial to identify and maintain the correct orientation during installation.

Pre-Bending LL and LR: Before attaching LL and LR, pre-bend the top end of each trim piece using pliers or, if possible, by hand. **Safety Recommendation:** Always wear sturdy work gloves when bending metal components.

Attachment Procedure: Enter the shed to access the interior. Locate the three screw holes on each LL and LR.

6

Part	Qty
S1	12
S2	12
S4	12
S5	12

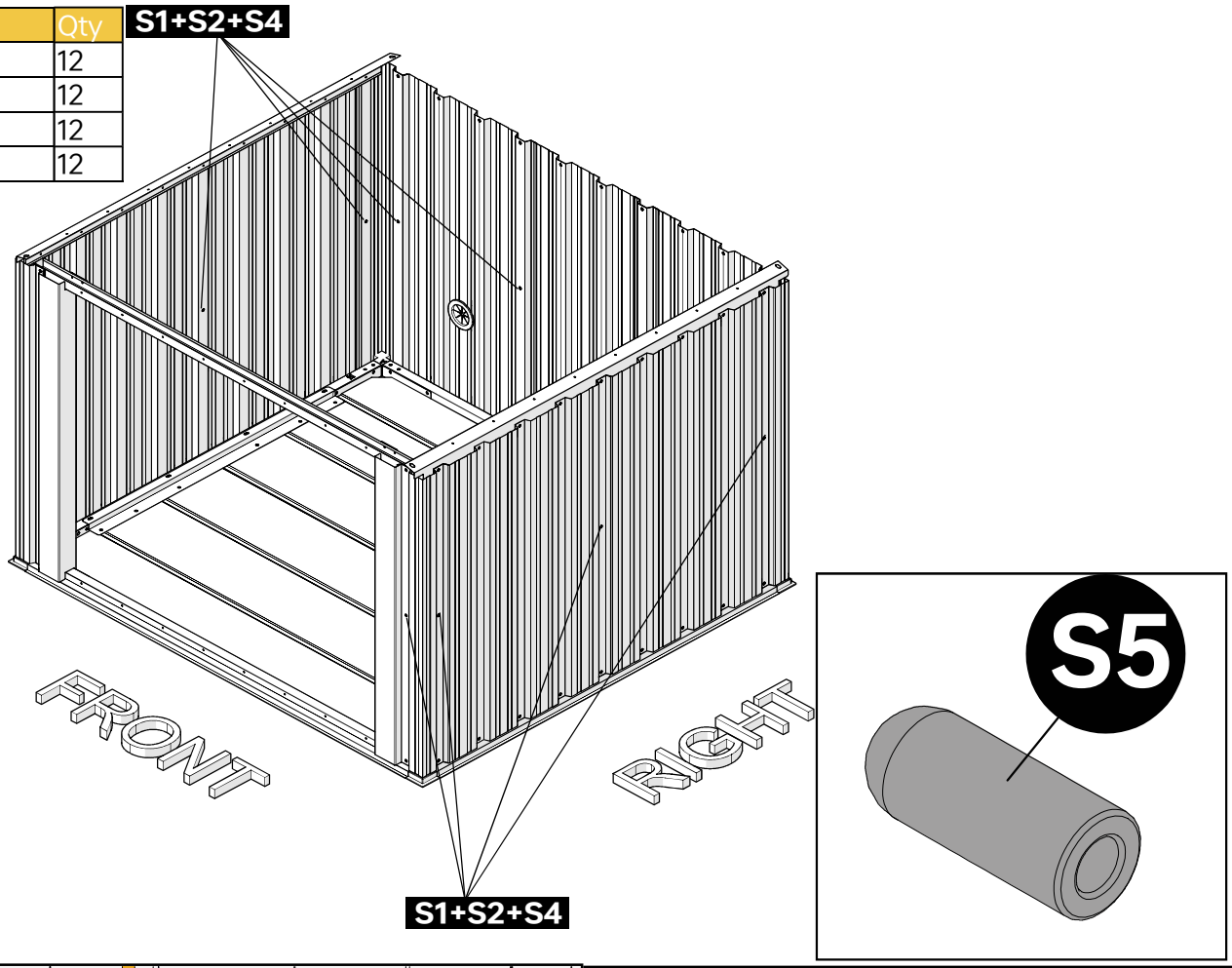

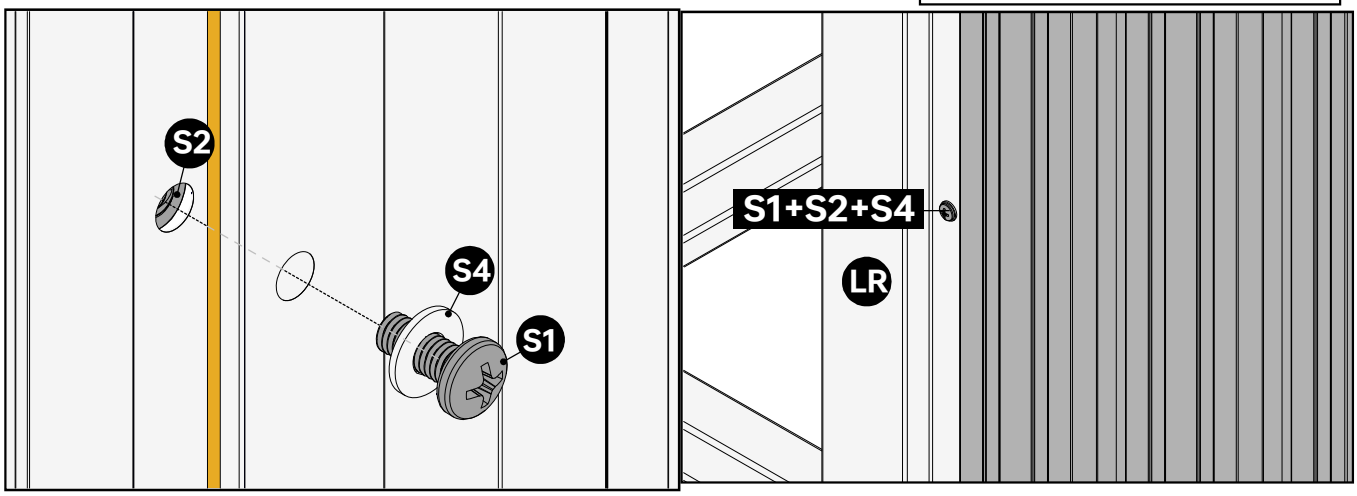

Note

UNUSED SCREW HOLES

Do not use the outermost screw holes; these will be used later.

ABOUT S1, S2, S4, AND S5

Besides the S3+S4 that are used to attach wall panels to the shed frames, two panels are attached together using S1+S2+S4 **in the middle** as shown above.

S5 is a plastic cap designed to fit with S1 and S3. Its primary function is to cover the sharp ends of screws, providing a neat finish. After you have completely assembled your dog house, attach the caps to any exposed screw heads for a cleaner appearance.

05 Roof

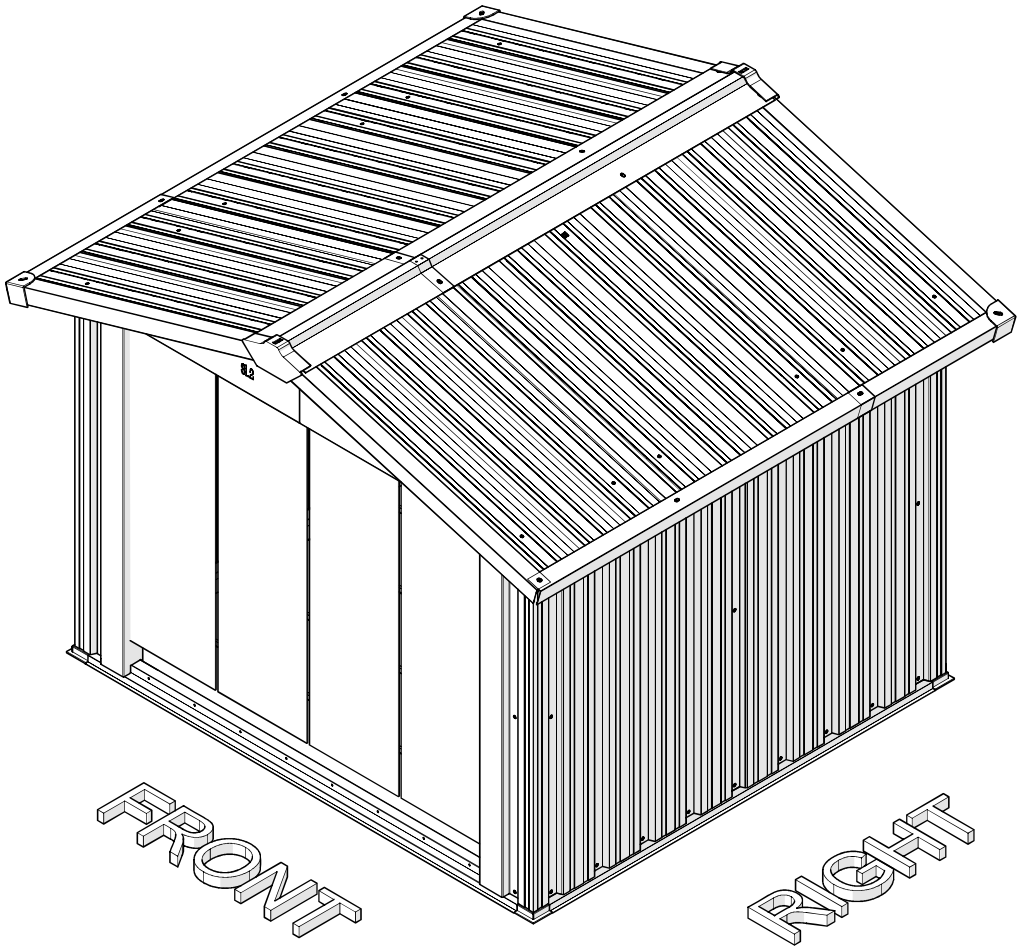

Part	Qty
SR1	1
SR2	1
SL1	1
SL2	1
S3	20
S4	2
S7	2
S8	2

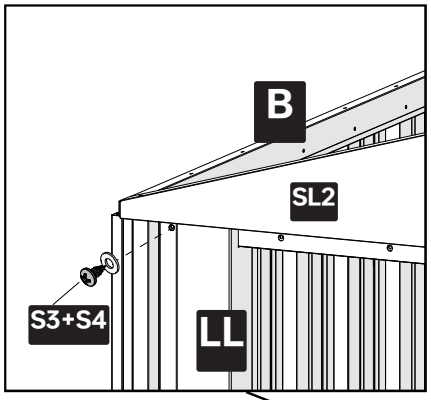

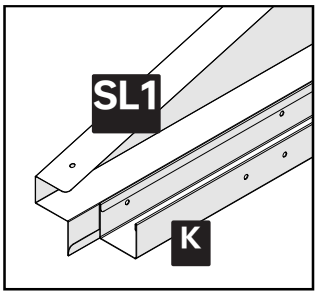

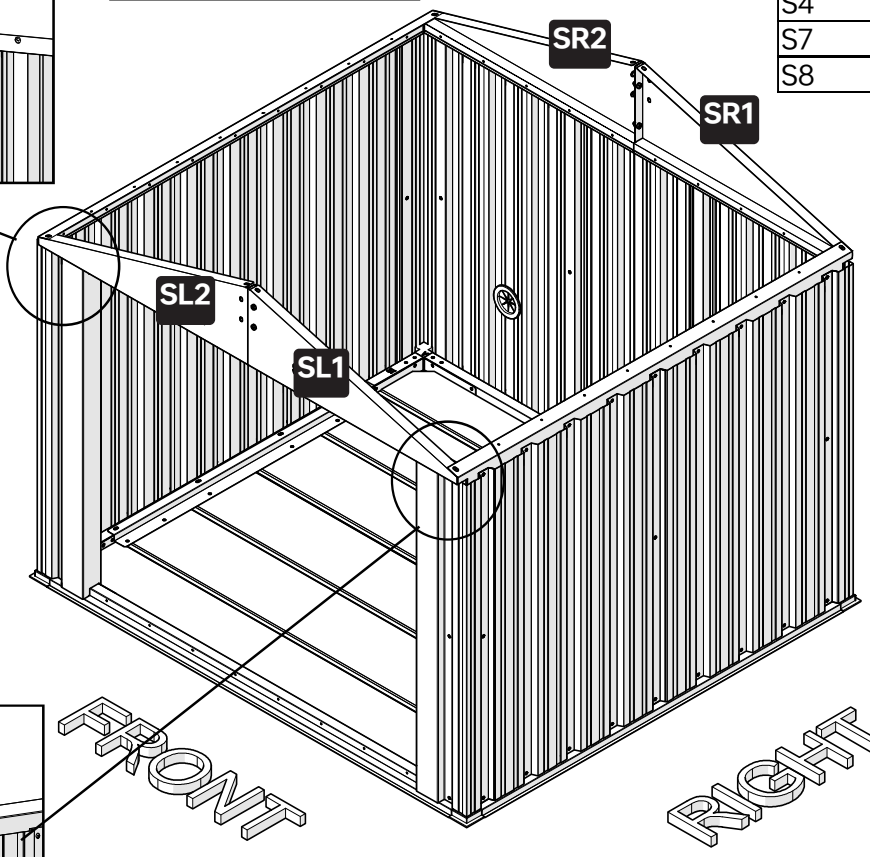

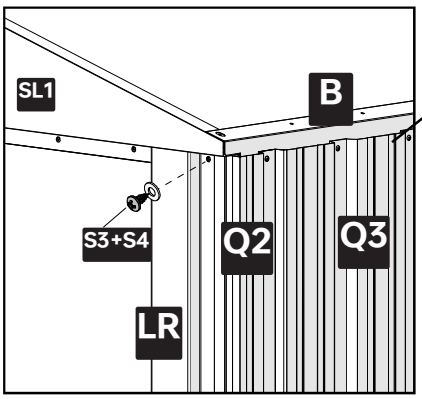

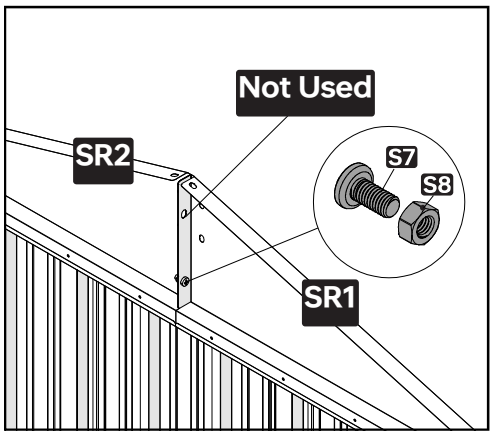

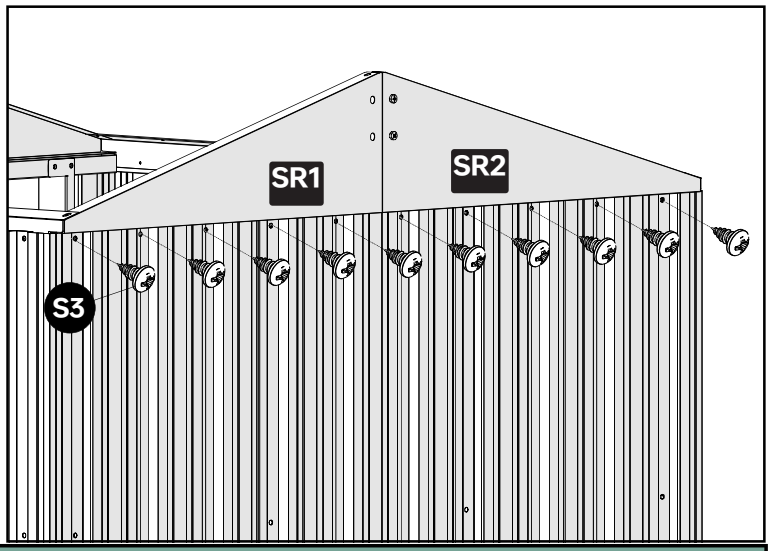

NOTE

Use S3 to secure SL+SR to the fames. No S4 is needed.

2

Part	Qty
L	2
S7	15
S8	15

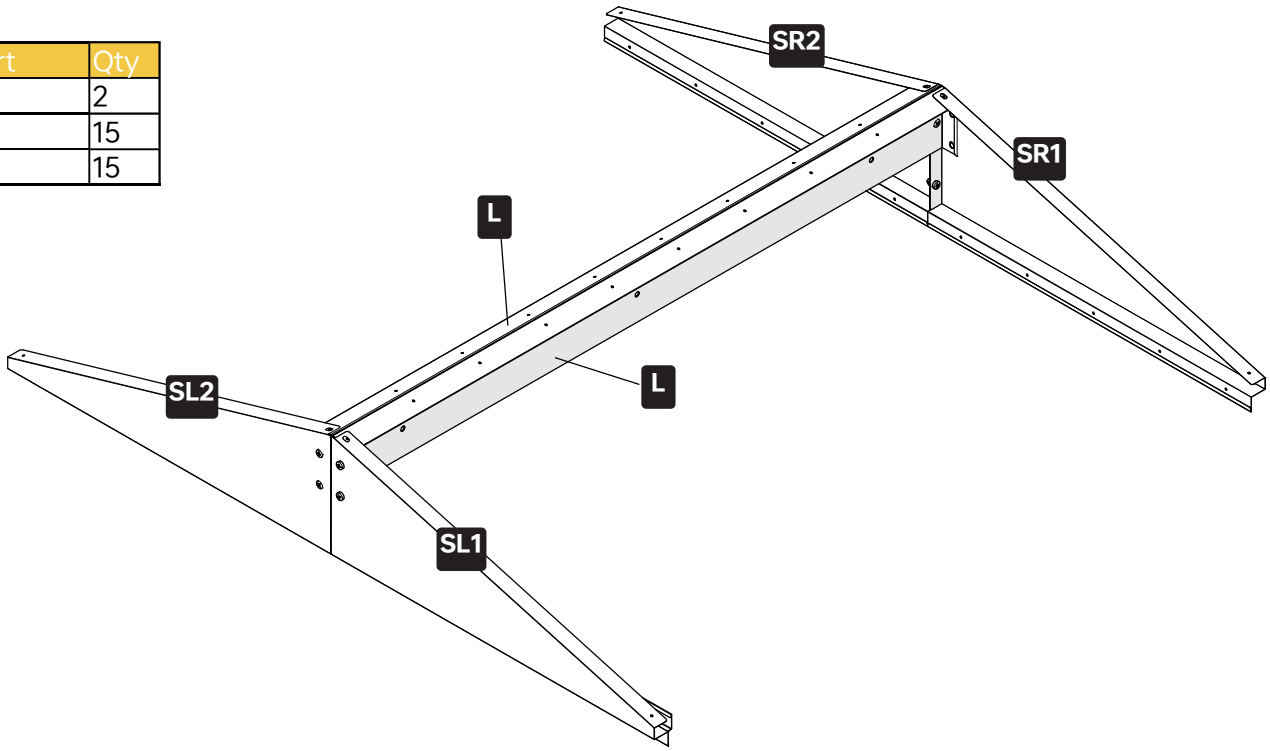

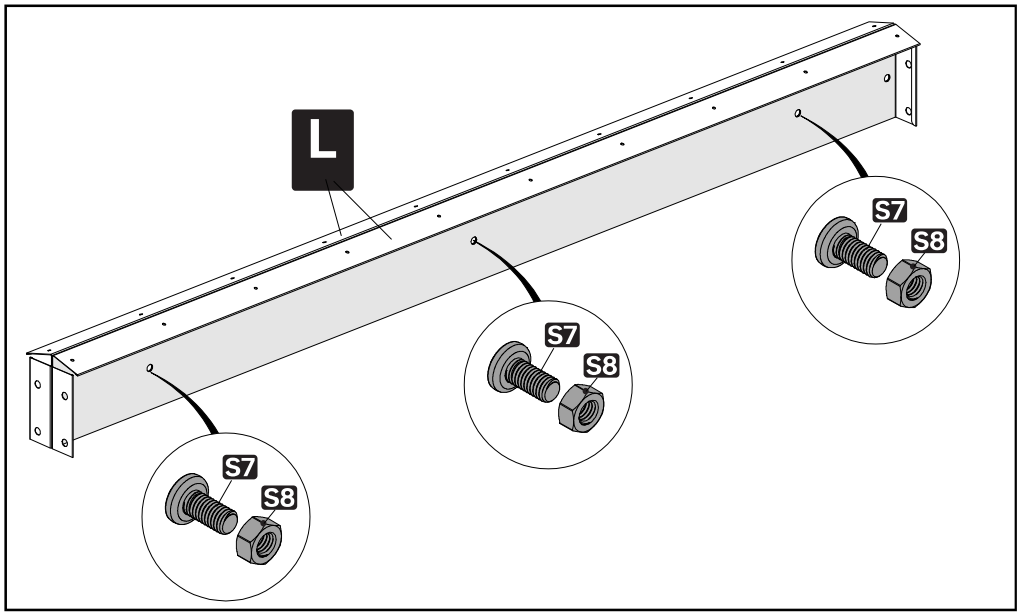

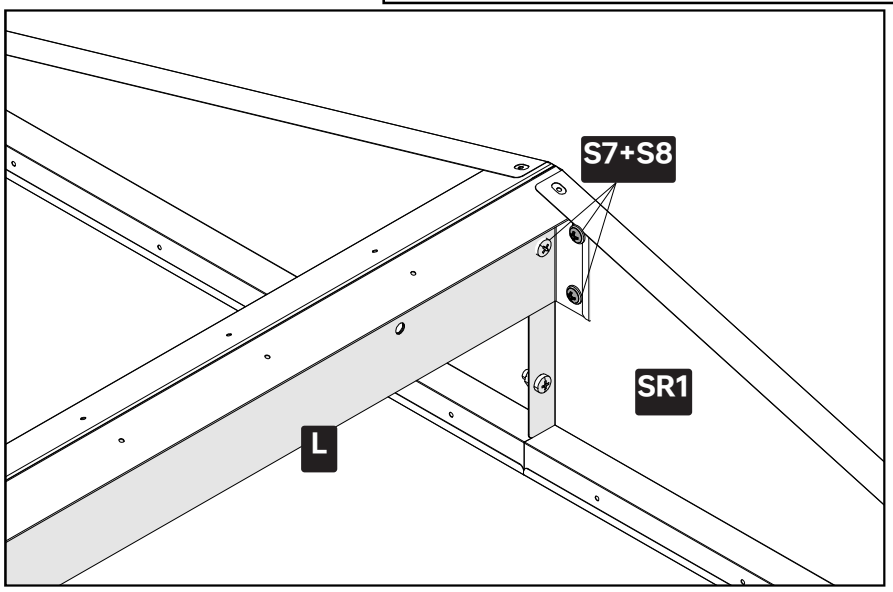

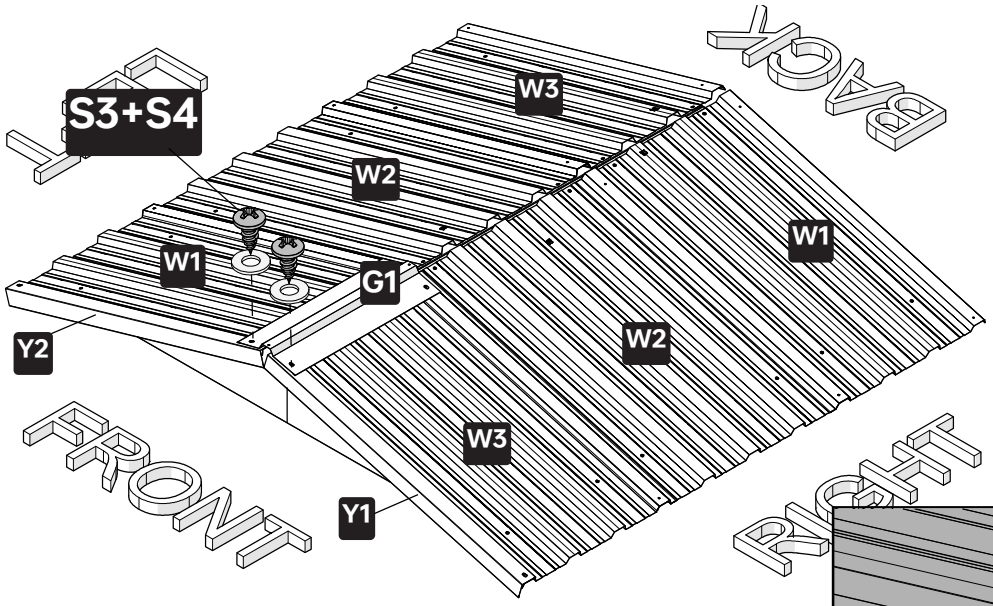

3

Part	Qty
S3	26
S4	26
W1	2
W2	2
W3	2

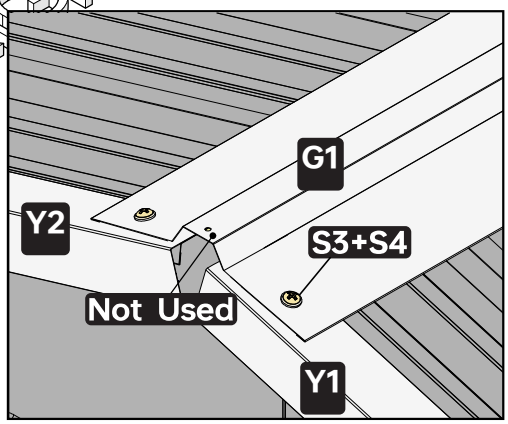

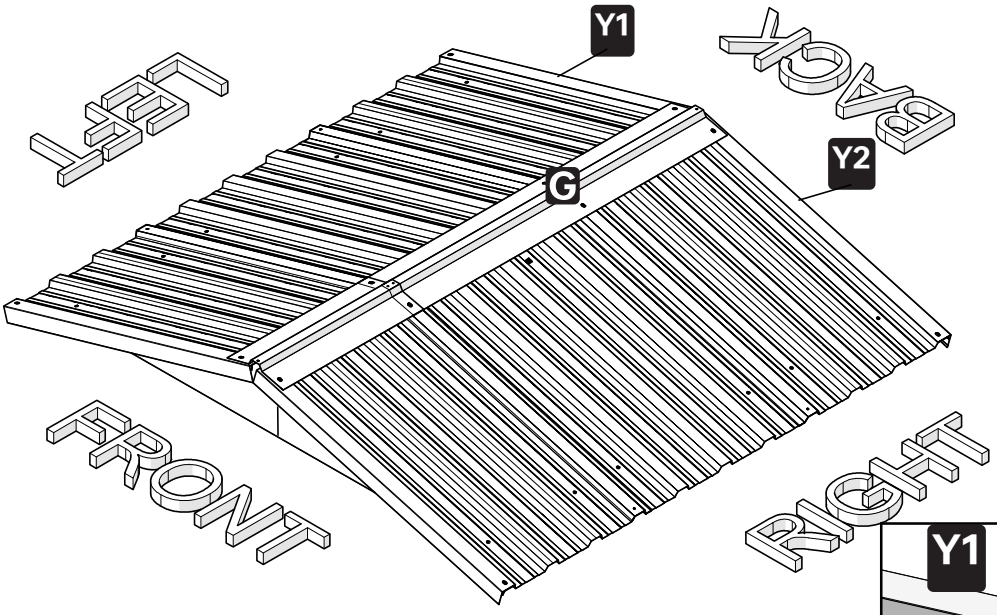

4

Part	Qty
S3	2
S4	2
Y1	1
Y2	1

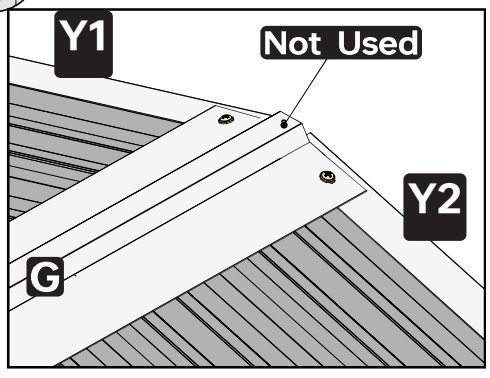

5

Part	Qty
D	2
E	4
S3	8
S4	8
Y3	2
Y4	2

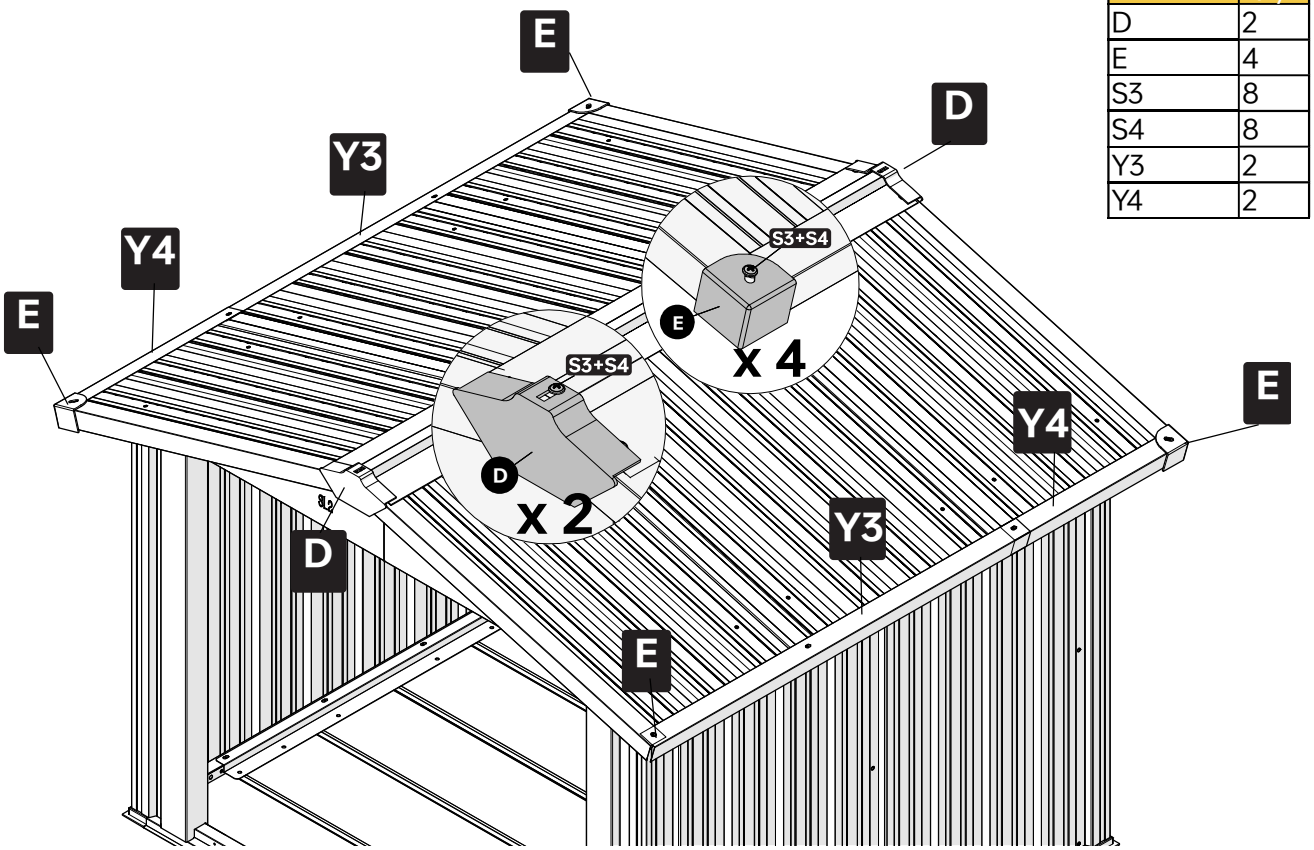

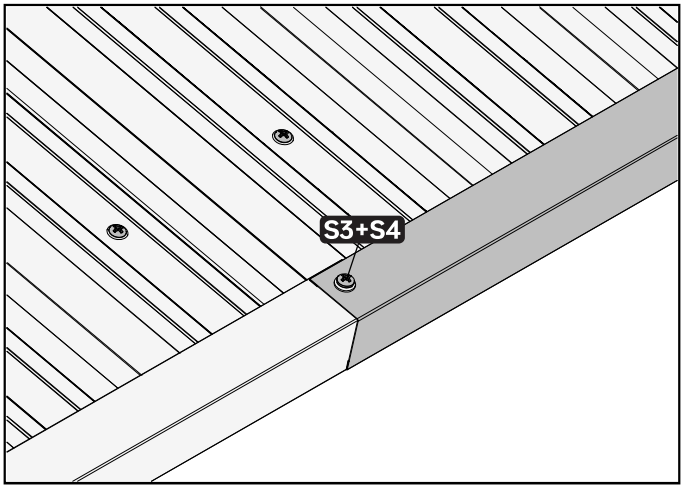

NOTE

Screw Hole Usage: This step utilizes the smaller diameter screw holes located on the roof panels, which were intentionally left unused during prior assembly steps.

Component Placement: The order of placement for components Y1, Y2, Y3, and Y4 is not critical. You can stack these components in any order without affecting the final assembly.

6

Part	Qty
LT	4
S3	8
S4	8

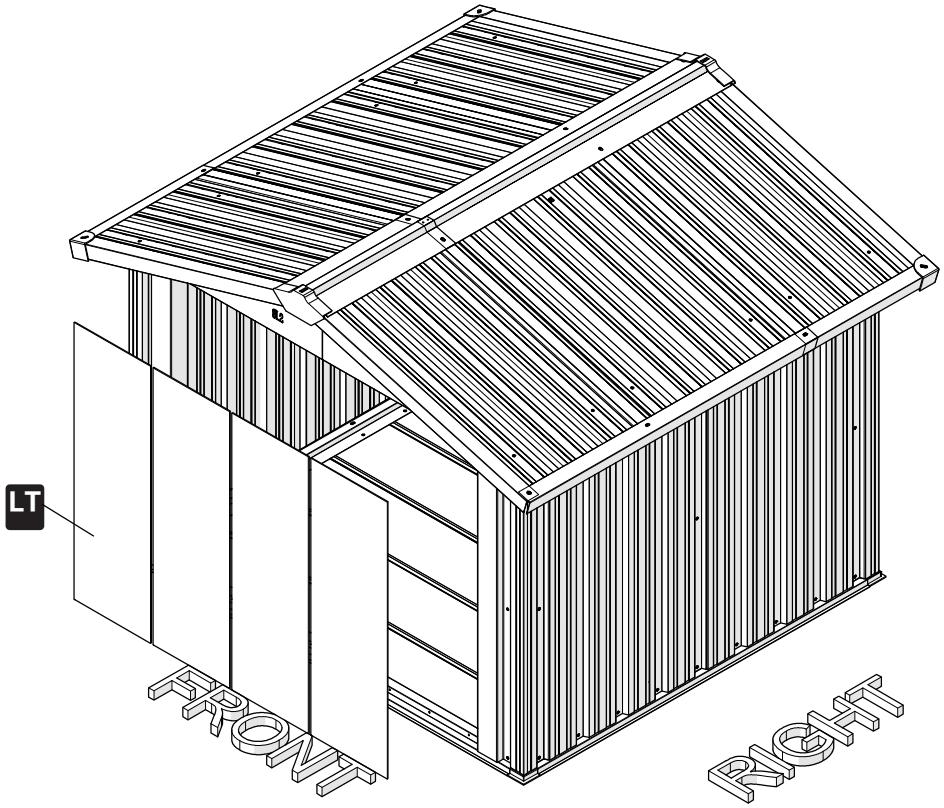

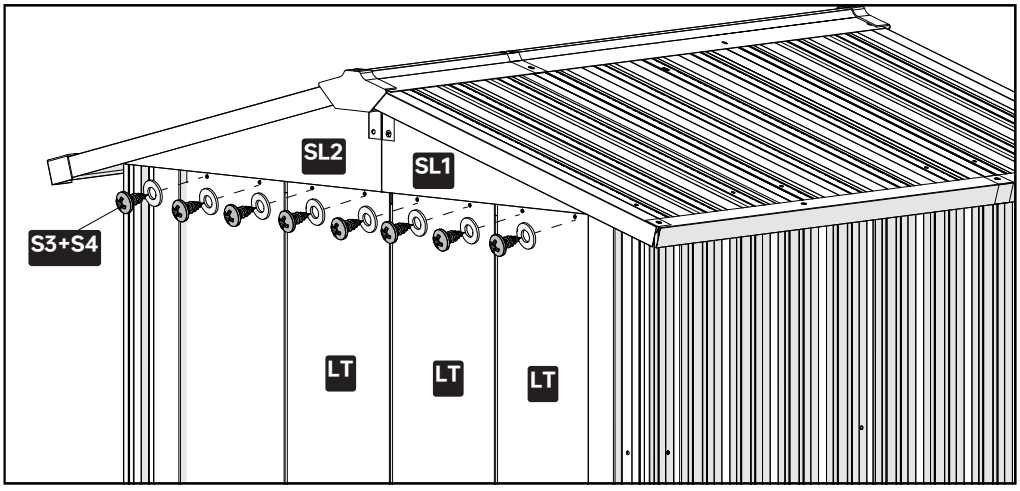

NOTE

LT Usage Instruction

This step involves the optional use of the LT pet door curtain, which was provided as an accessory but not required for the basic assembly of the product.

Component Deployment

The installation of the LT pet door curtain is not mandatory. You may choose to skip its installation if you find the weather too warm, as this will not impact the structural integrity or basic functionality of the assembled product.