INSTALLATION INSTRUCTIONS

FOR YOUR SAFETY WARNING: BE SURE THE ELECTRICITY TO THE WIRES YOU ARE WORKING ON IS SHUT OFF; EITHER THE FUSE IS REMOVED OR THE CIRCUIT BREAKER IS SHUT OFF. GENERAL You don't need special tools to install this fixture. Be sure to follow the steps in the order given. Under no circumstances should a fixture be hung on house electrical wires, nor should a swag type fixture be installed on a ceiling which contains a radiant type heating system. Read instructions carefully. If you are unclear as to how to proceed, consult a qualified electrician.

NOTE: Proper wiring is essential for the safe operation of this fixture.

HANGING THE FIXTURE (Fig. 1)

1. Shut off the power at the circuit breaker and remove the old fixture, including the mounting hardware. Carefully unpack your new fixture and lay out all the parts on a clear area. Take care not to lose any small parts necessary for installation.
2. Place lock washer (C) over end of nipples (E) protruding through crossbar (A) and thread hex nut (D) onto nipples (E) until tight. Take this crossbar assembly and mount to ceiling outlet box screws (B). Tighten screws securely with screwdriver. The side of the cross bar marked "GND" must face out.
4. Use a pair of pliers to open one end link of the chain provided and connects to the fixture loop (J). Close the link. By measuring, determine correct number of links needed for proper hanging height. Using pliers disconnect and discard remaining chain.
5. Lace the fixture wires through the chain. Slip loop collar (I) over the chain, and then do the same with Canopy (H). Open the other end link of chain and hang the fixture on the loop at the ceiling. Close the link. Feed the fixture wires through the loop (G) and the nipples (E) and pull until taut.
6. **CONNECTING THE WIRES (Fig. 2)**
   At this point, connect the electrical wires as follow:
   Connect the smooth wire from the fixture to the black (hot) house wire. Connect the ribbed wire from the fixture to the white (neutral) house wire. Make sure all wire nuts are secured. You may wrap the connections with electrical tape. If your outlet has a ground wire (green or bare copper). Connect fixture's ground wire to it. Otherwise, connect fixture's ground wire directly to the crossbar using the green screw provided. Tuck the wire connections neatly into the ceiling junction box.
7. Finally screw the loop collar (I) to the loop (G) and secure the canopy (H) to the ceiling.
8. Install the bulb (T bulb Medium base, not included.) in accordance with the fixture's specification.
   DO NOT EXCEED THE MAXIMUM WATTAGE RATING!

Your installation is now complete. Return power to the junction box and test the fixture

Fig.1

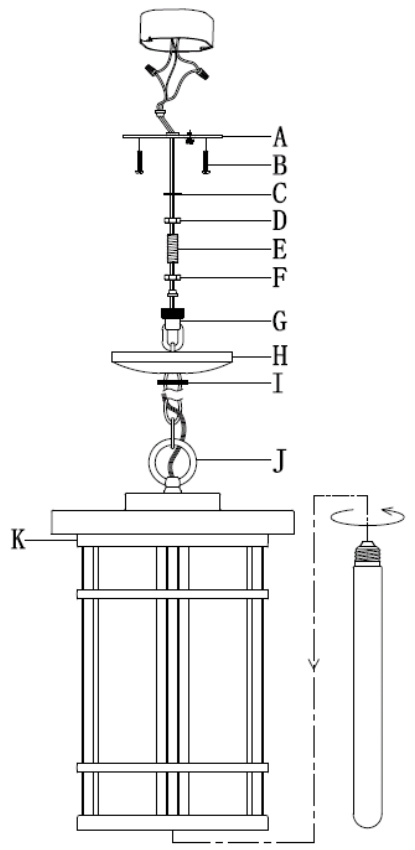
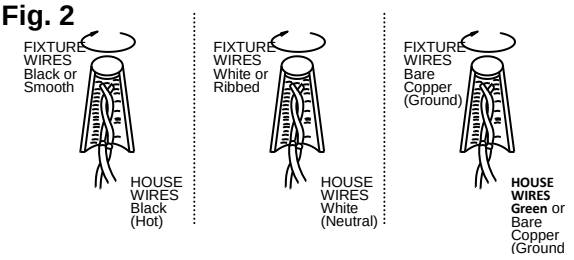
Fig. 2