shoe cabinet

Product ID. QVLXU

Scan for Support
support@garvee.com

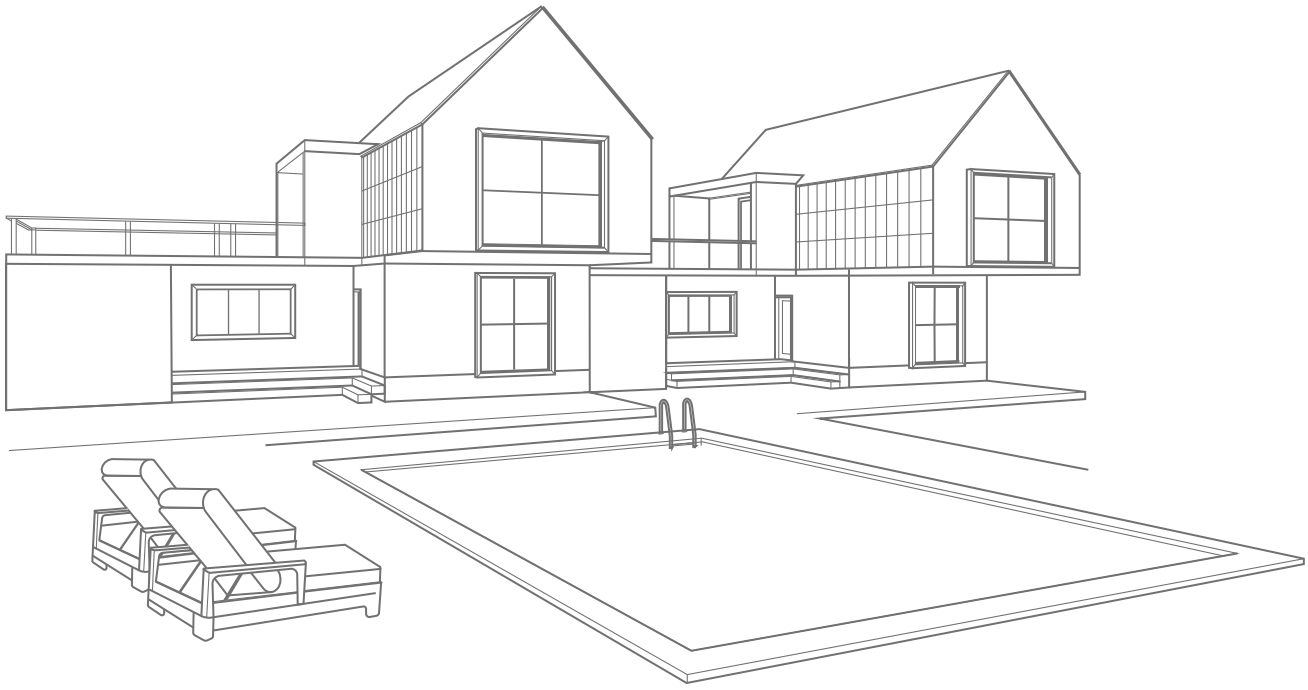

Distributed by
GARVEE.com

Assembly Instruction

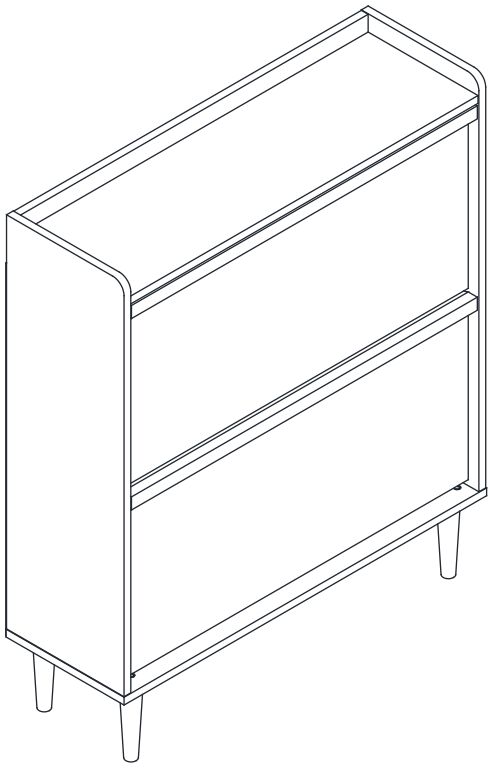

Team Assembly Recommended

Trouble shooting:

Missing / Wrong / Broken parts and installation issues

↓

Send email with your question pic, order NO. and screenshot of order details to:
support@garvee.com

↓

Respond within 24 hours

↓

Issue resolved

Tips!

1.Check all the components & screws are intact before assembling .
2.If you notice any pieces are missing or damaged please do not assemble and contact us immediately .
3.**Please send an email with you order number and issues,we will respond within 24 hours.**
Customer Service Team: support@garvee.com

IMPORTANT SAFETY INFORMATION

Please carefully read the following instructions and caution warnings before assembling the product.

Following this guide will ensure that you install, use and maintain the product properly.

Please keep this installation and user manual/instructions for future reference in case you need to disassemble the product.

Never allow children to climb onto the product. Ensure that you have special safety measures when children are around on their own.

Be sure to check that all parts of the product are intact after you open the package.

Do not assemble if you notice serious damage such as cracks or bends.

During installation, please use work gloves for hand safety.

Please assemble the unit on carpeted floor or the flat cardboard box to avoid scratching the surface or your floor while assembling on the floor.

To assemble, please use the complimentary installation tools (Phillips screwdriver). Pay more attention to the direction of components at each steps.

It is recommended that two people work together to assemble the product.

RETURN POLICY

Please contact us directly within 30 days after receiving.

Ensure the product is in a good condition with the original box and all original certificates of purchase, manuals, and accessories attached.

HOW TO MAINTAIN YOUR PRODUCT

Check the screws of the product are not loose from regular use.

Do not use sharp instruments, rubbing alcohol, corrosive chemicals, or abrasive cleaners to clean the item.

Please check that you have all the parts listed below

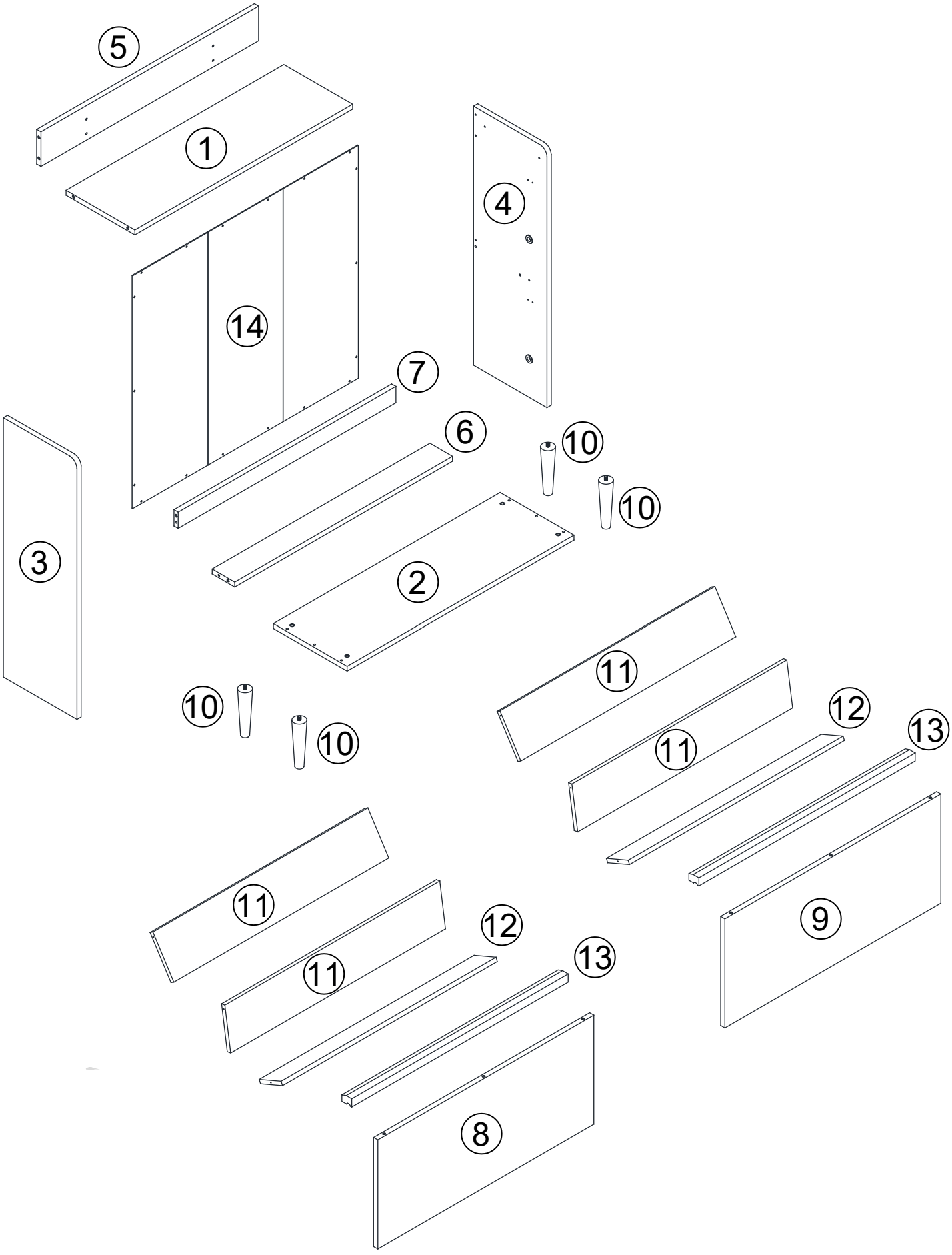

Please check that you have all the parts listed below

Ⓐ x 18pcs 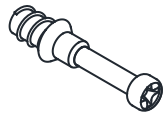 M6*32mm	Ⓑ x 18pcs  Ø15*9mm	Ⓒ x 22pcs  Ø25mm	Ⓓ x 6pcs  Ø6*30mm
Ⓔ x 6pcs 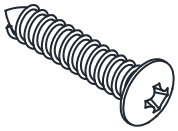 M5*40mm	Ⓖ x 38pcs 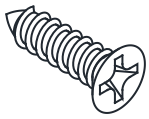 M4*15mm	Ⓗ x 12pcs 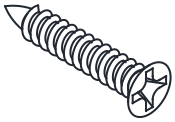 M3*20mm	Ⓙ x 8pcs  Ø10*1.5mm
Ⓚ x 2pcs 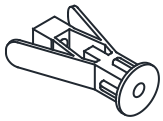	Ⓛ x 2pcs  M4*50mm		
Ⓟ x 2pcs 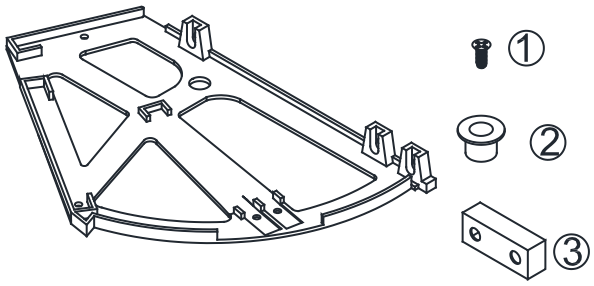		Ⓠ x 2pcs 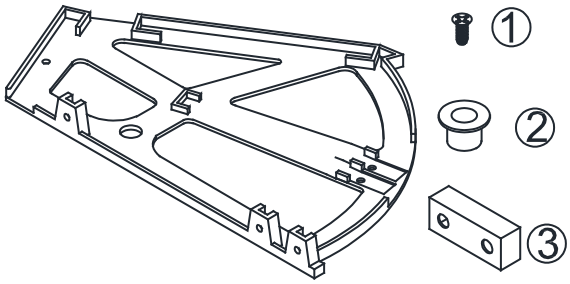	

1

Ⓗ x 8pcs

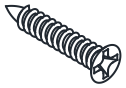

M3*20mm

Ⓟ x 4pcs

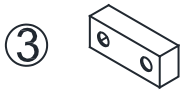

Ⓙ x 8pcs



Noted the length of screw(H) is 20mm

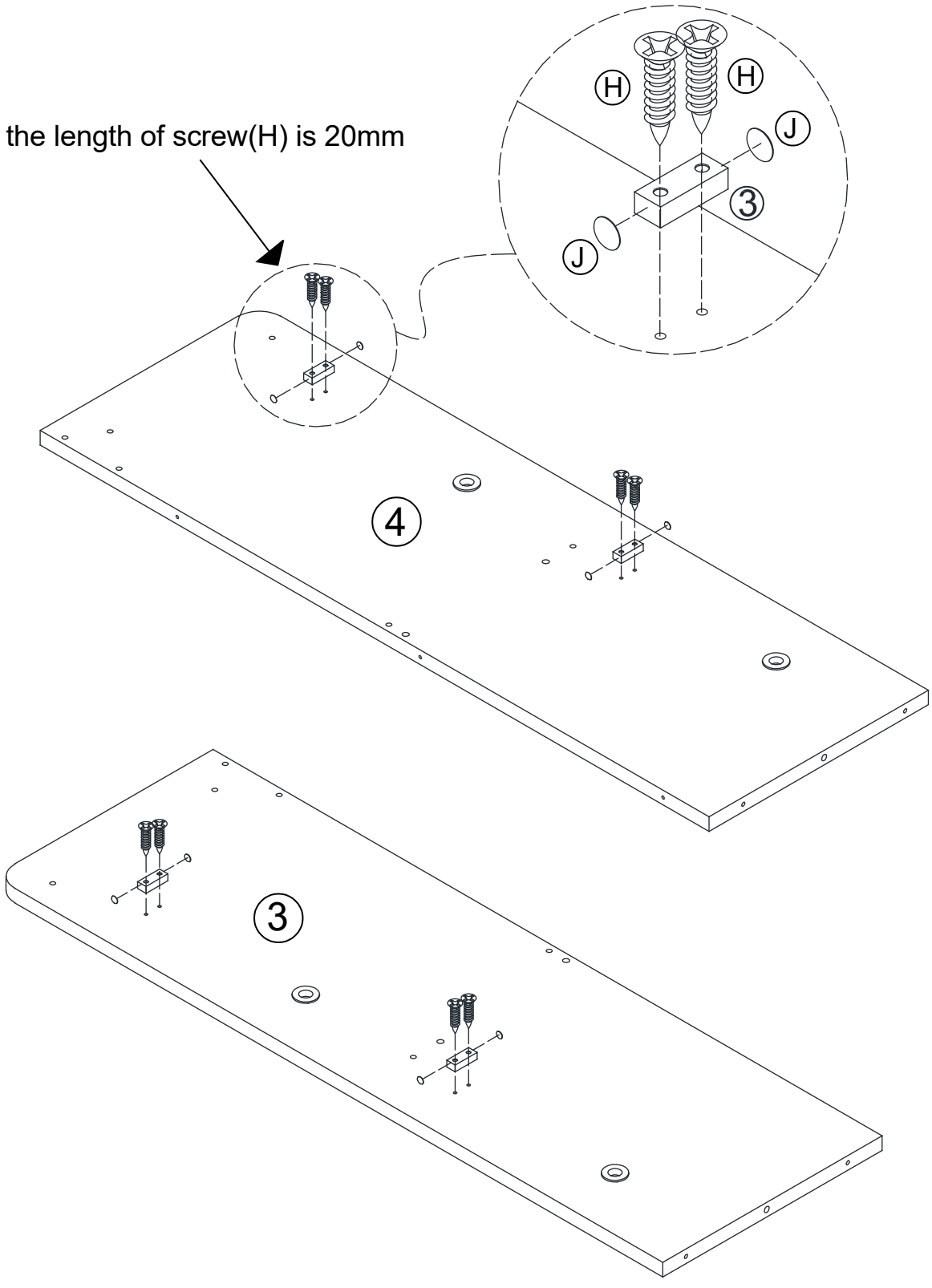

2

Ⓐ x 12pcs

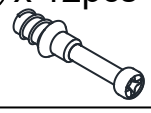

Ⓓ x 6pcs



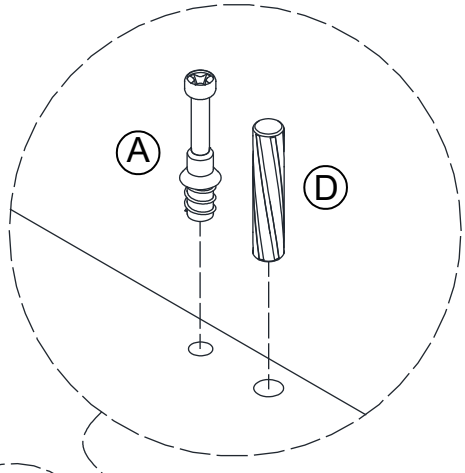

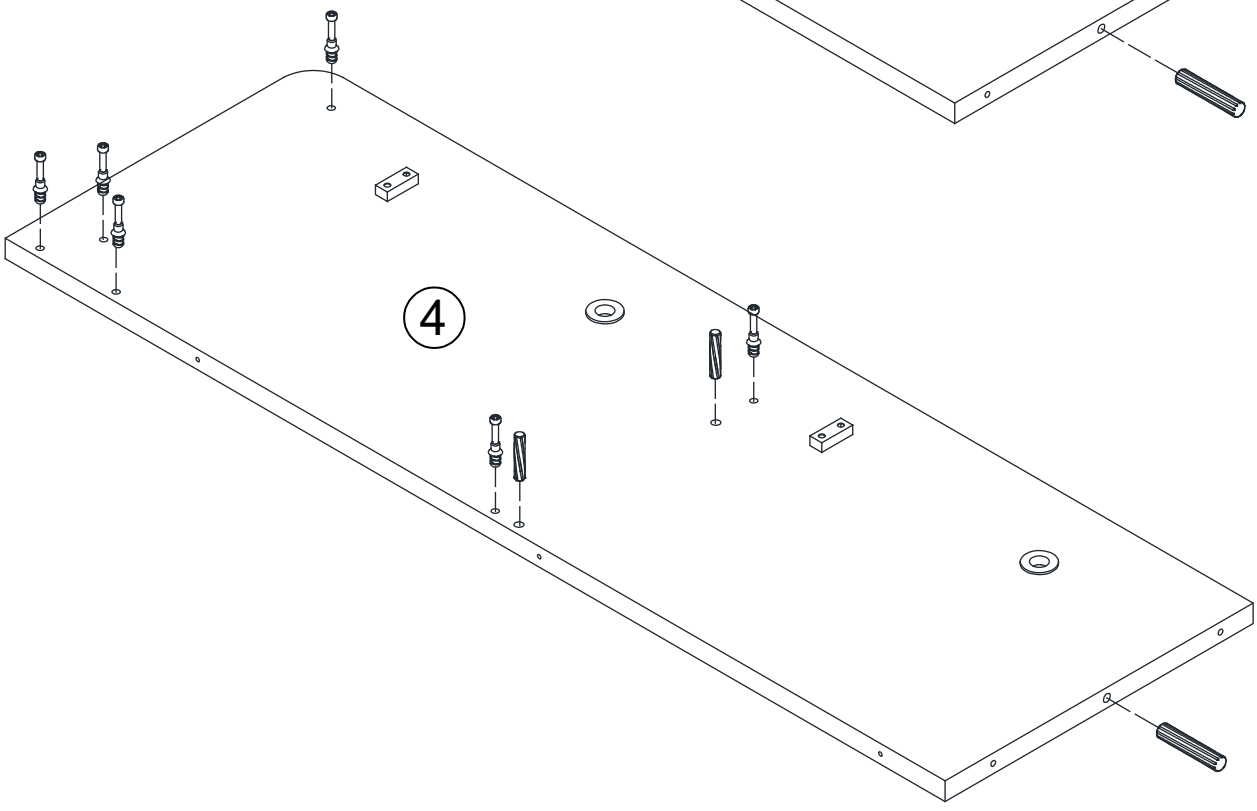

3

Ⓔ x 2pcs



M5*40mm

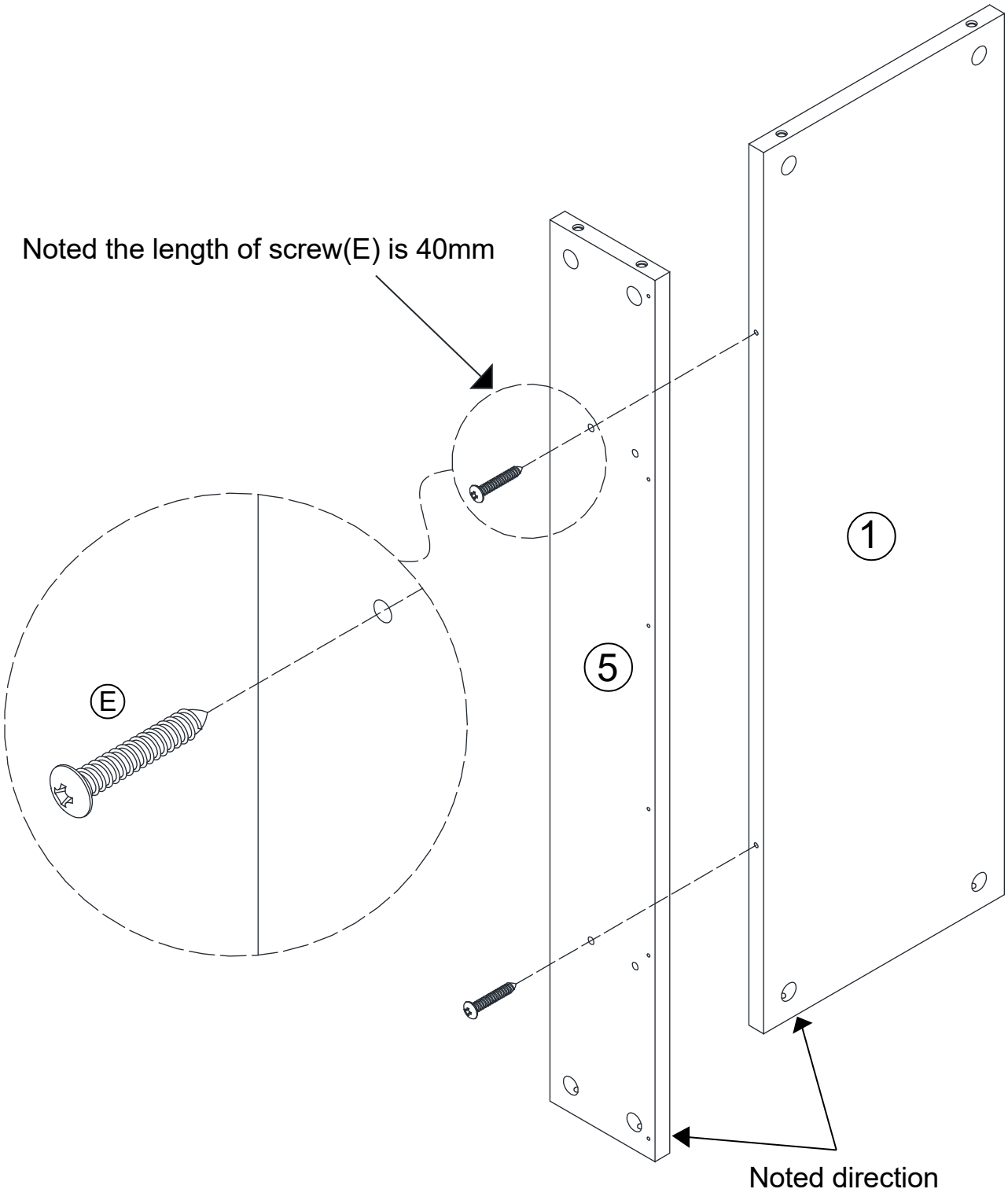

4

Ⓑ x 4pcs



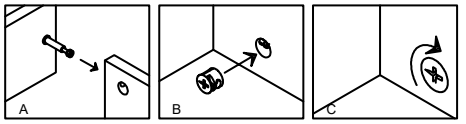

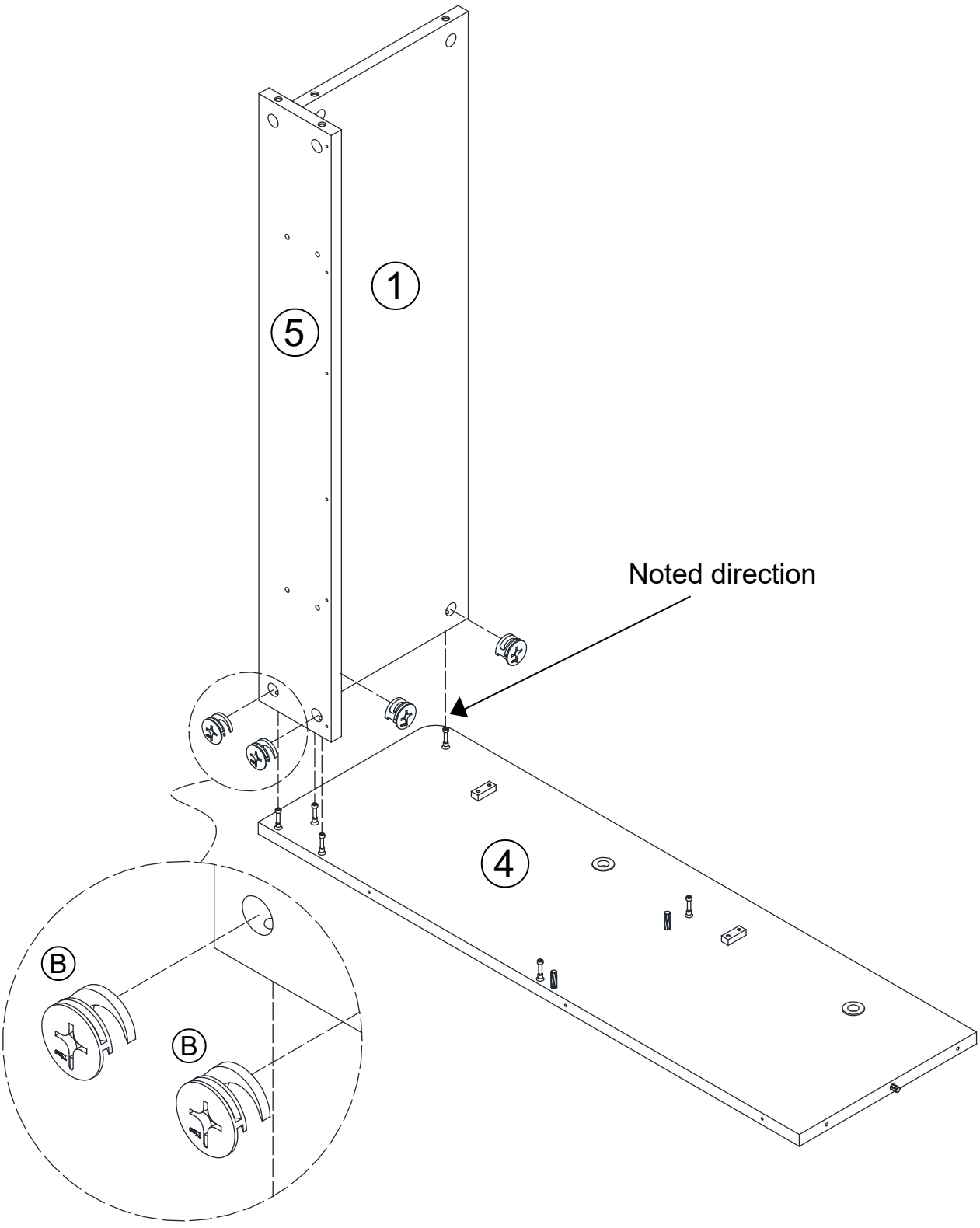

5

Ⓑ x 2pcs



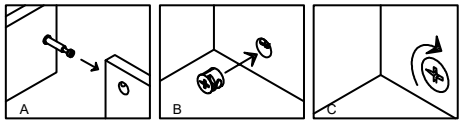

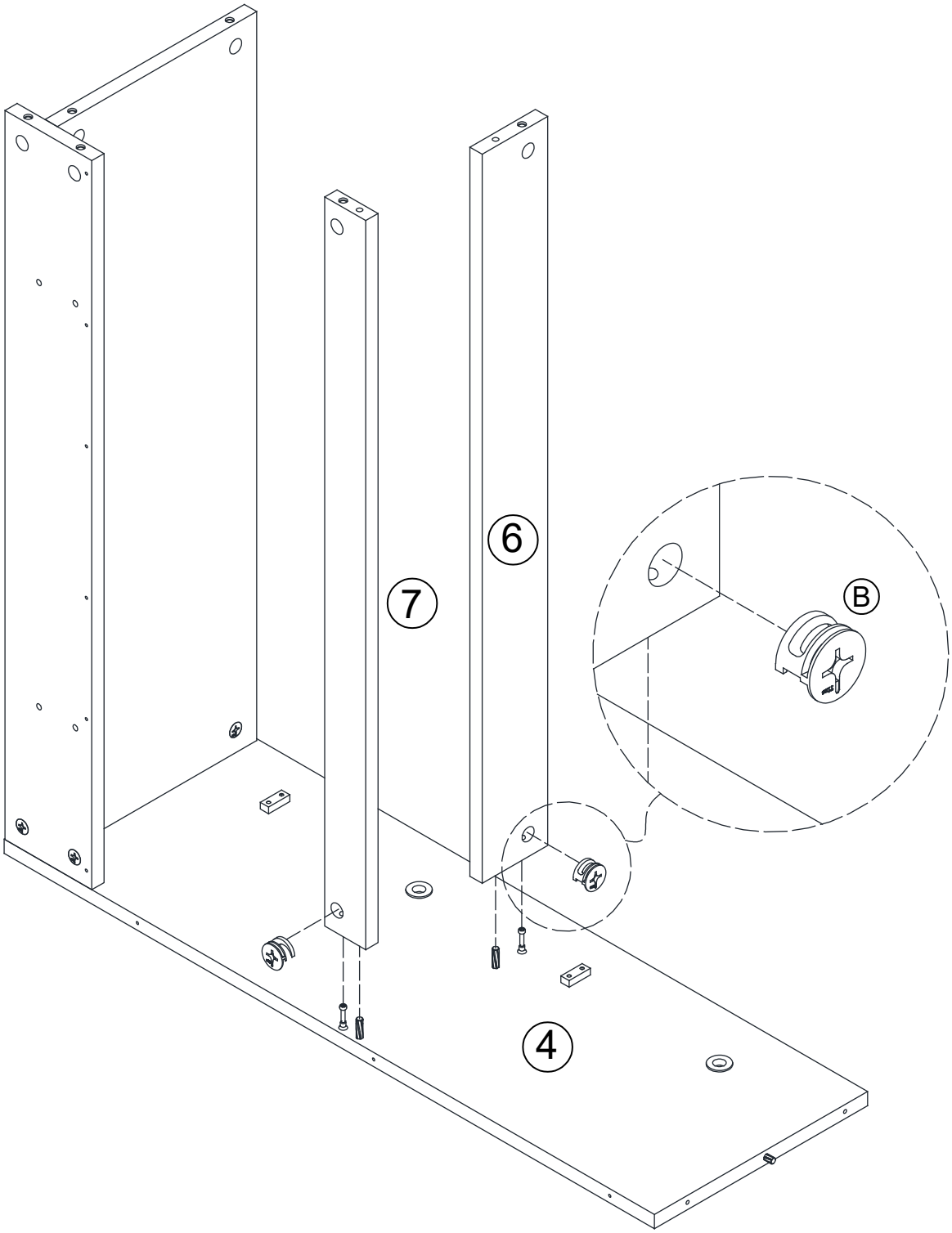

6

Ⓑ x 6pcs



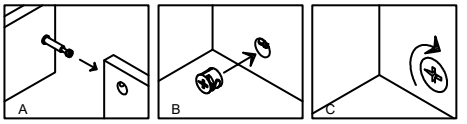

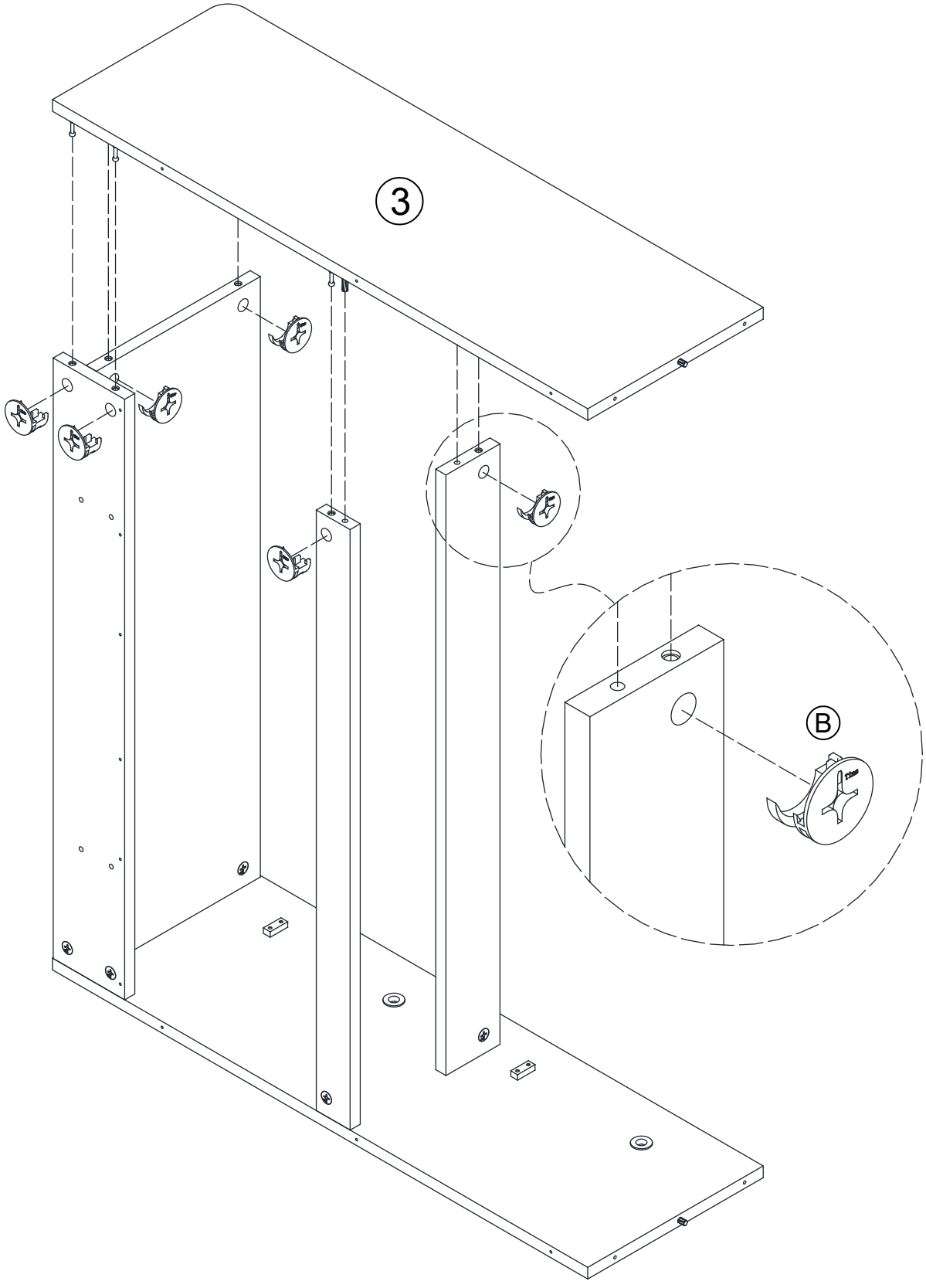

7

Ⓔ x 4pcs

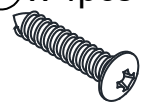

M5*40mm

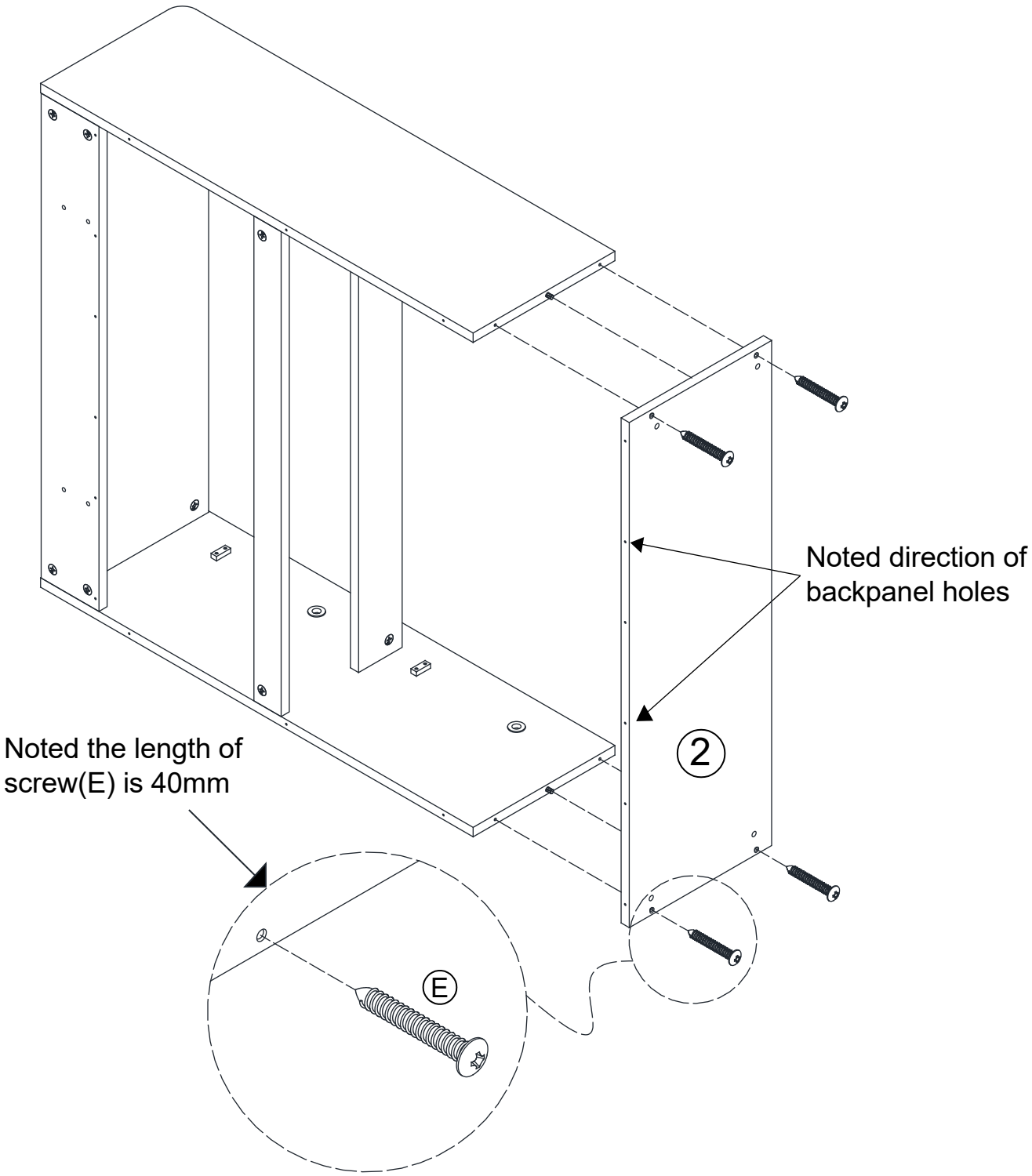

8

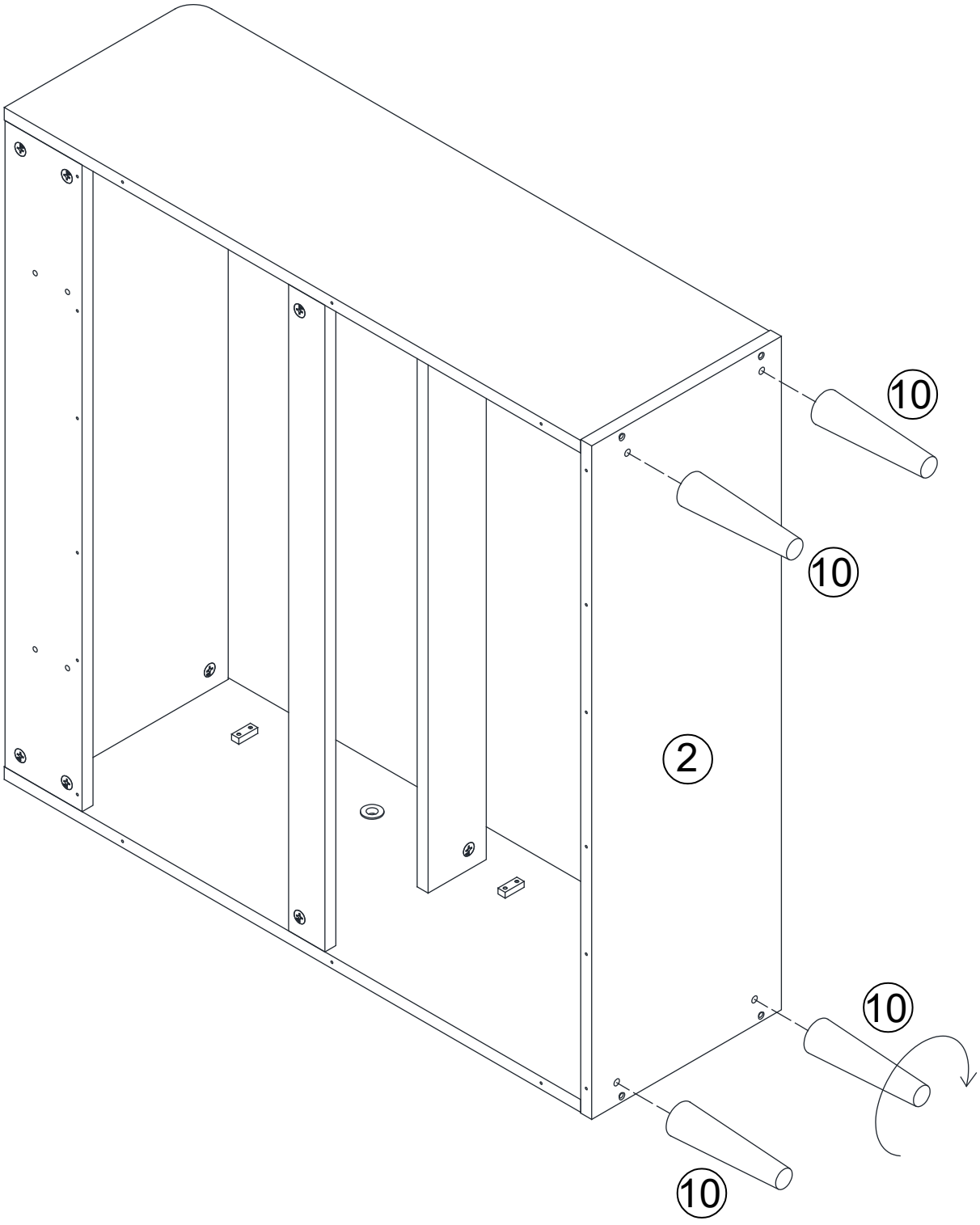

9

Ⓖ x 18pcs

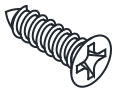

M4*15mm

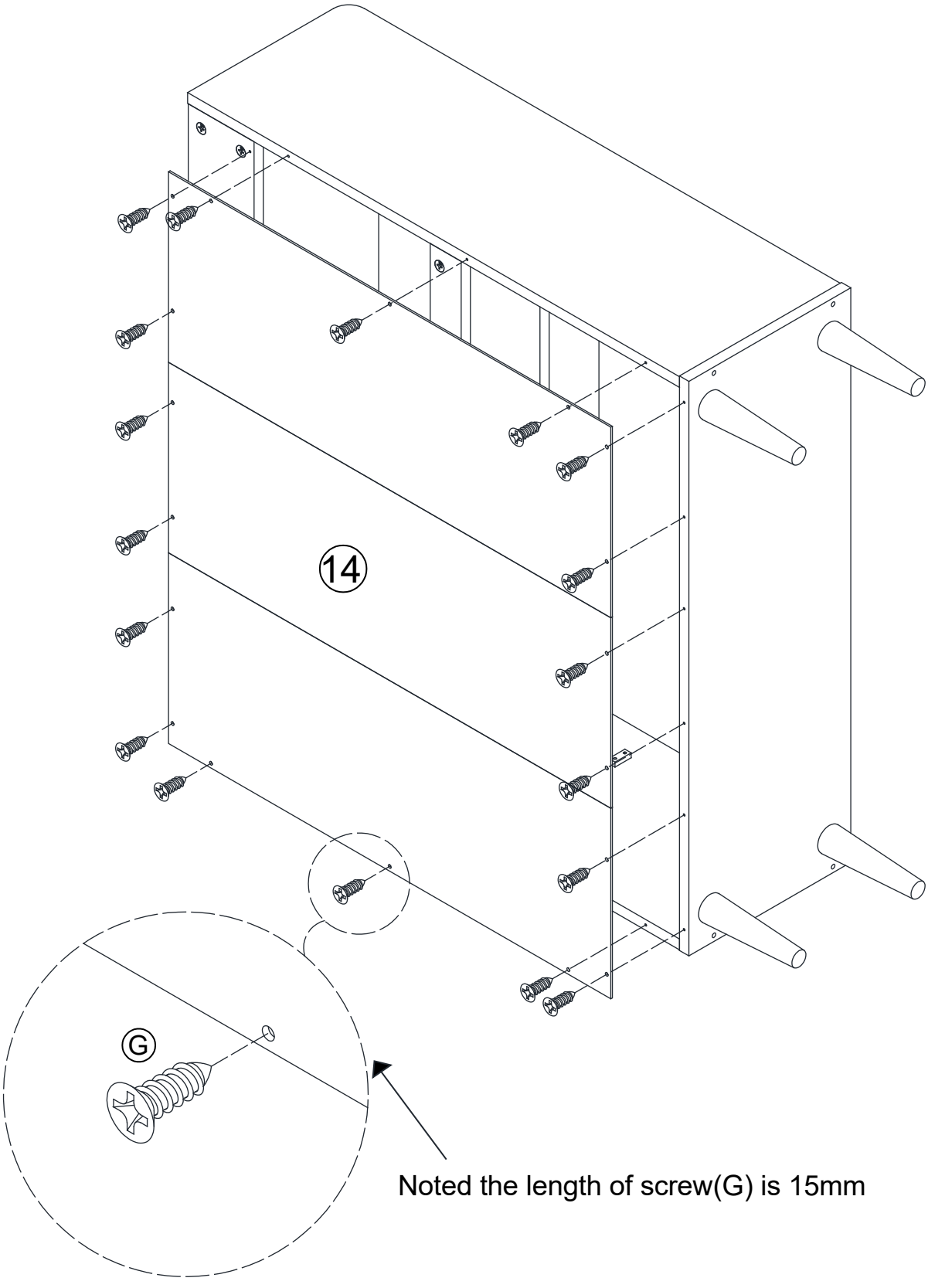

10

Please be careful to
stand up the product.

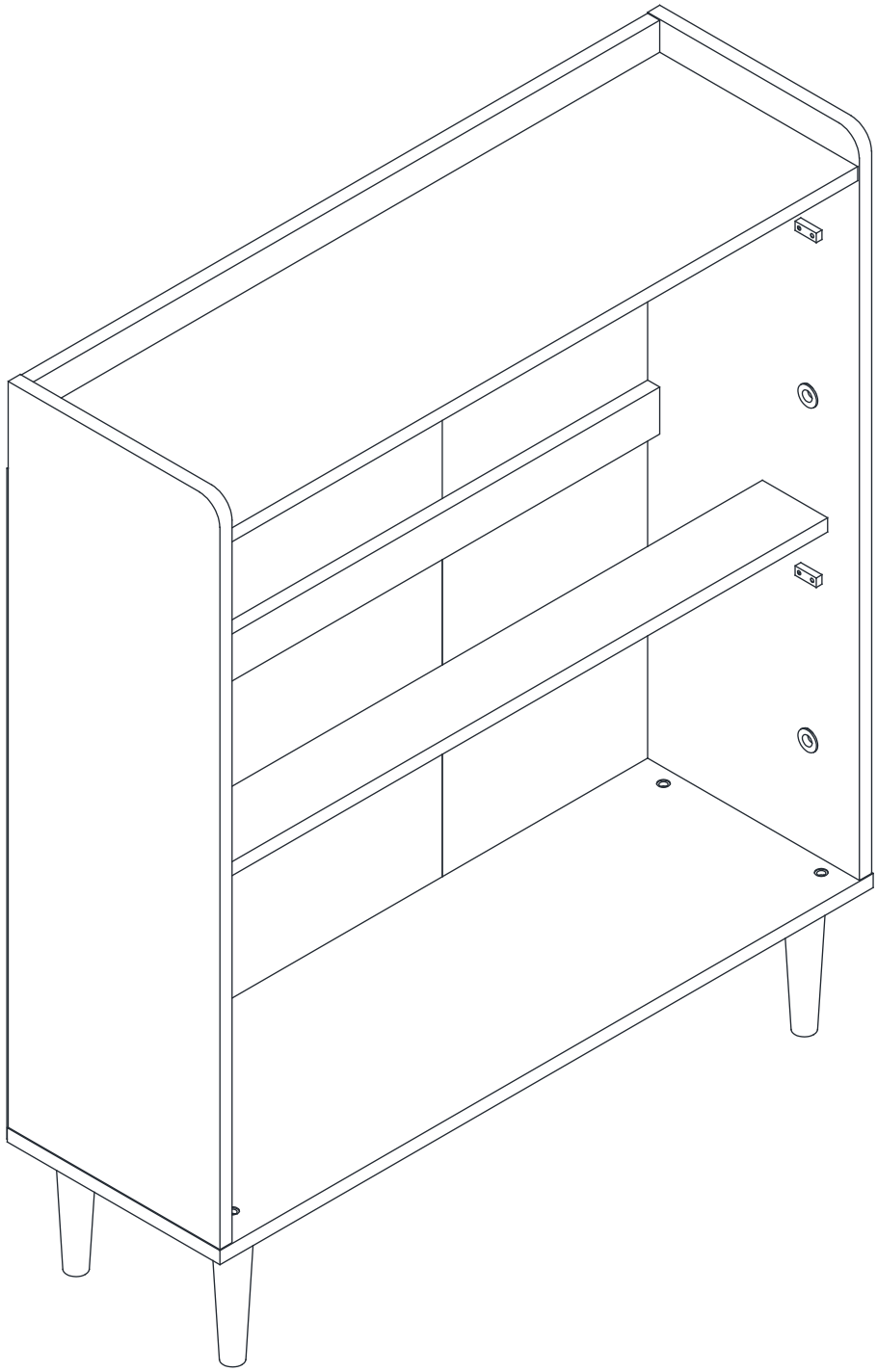

11

Ⓒ x 4pcs

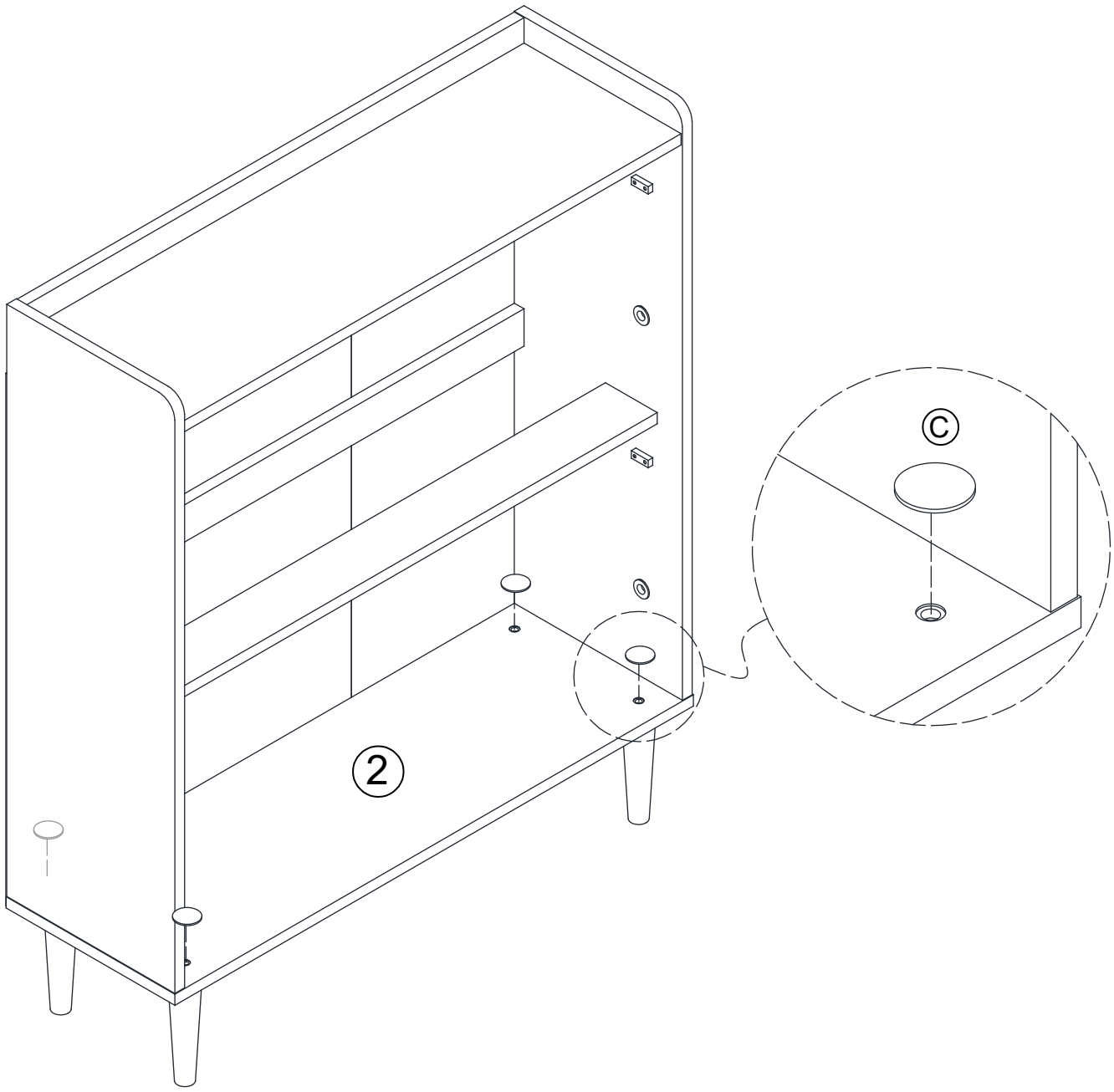

12

Ⓚ x 2pcs

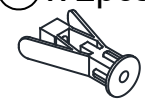

Ⓛ x 2pcs

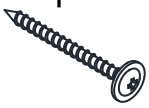

M4*50mm

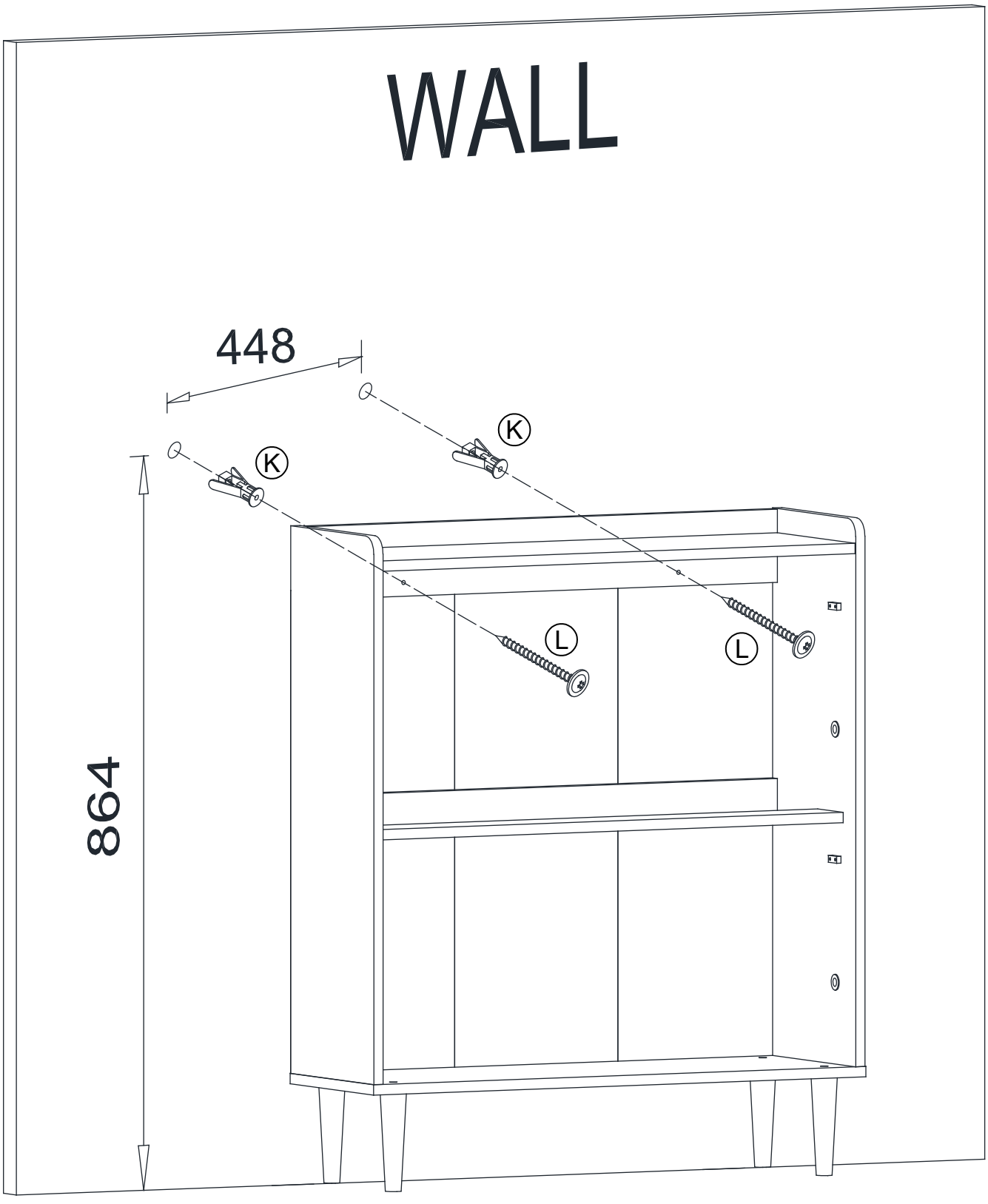

13

Ⓐ x 6pcs

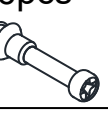

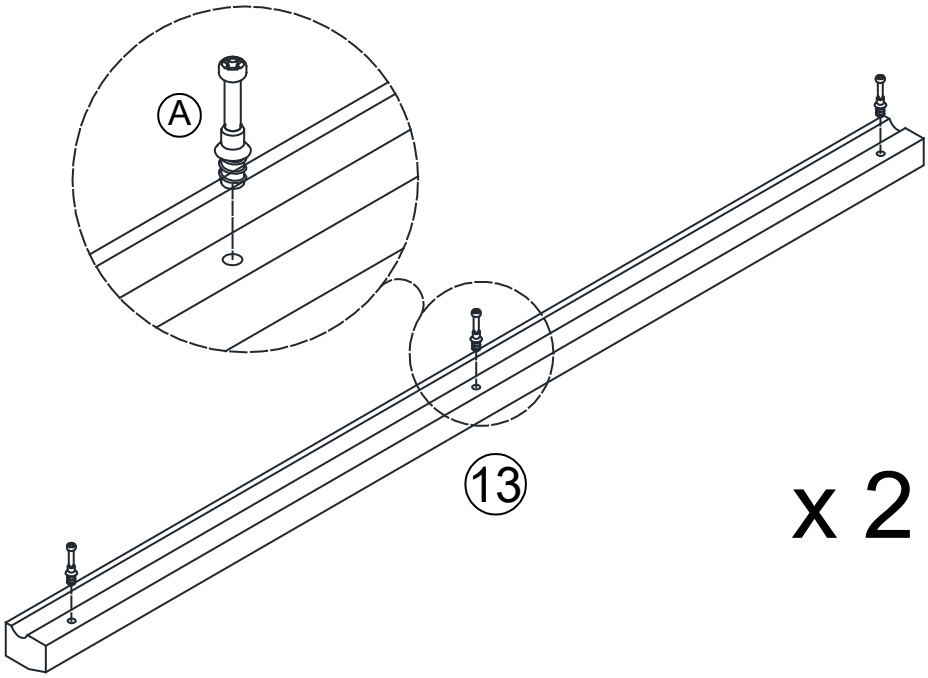

14

Ⓑ x 3pcs



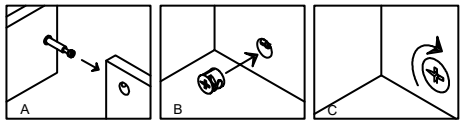

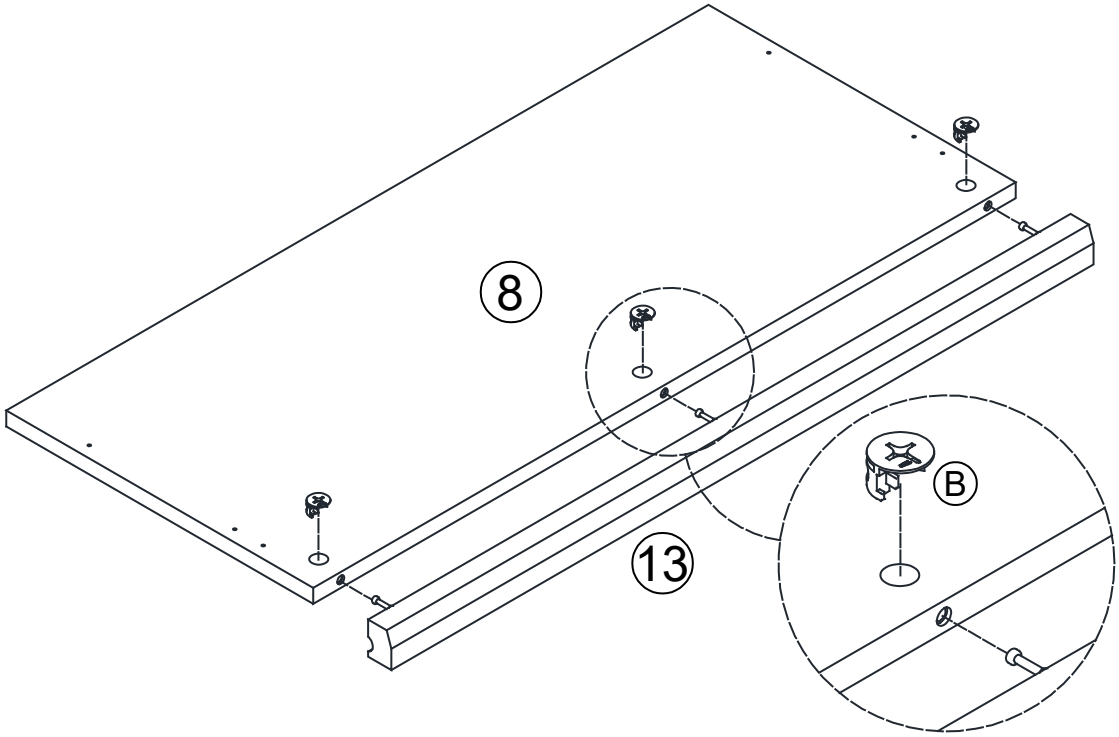

15

Ⓑ x 3pcs



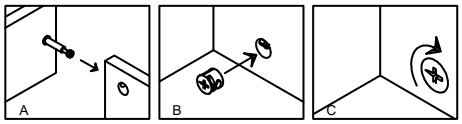

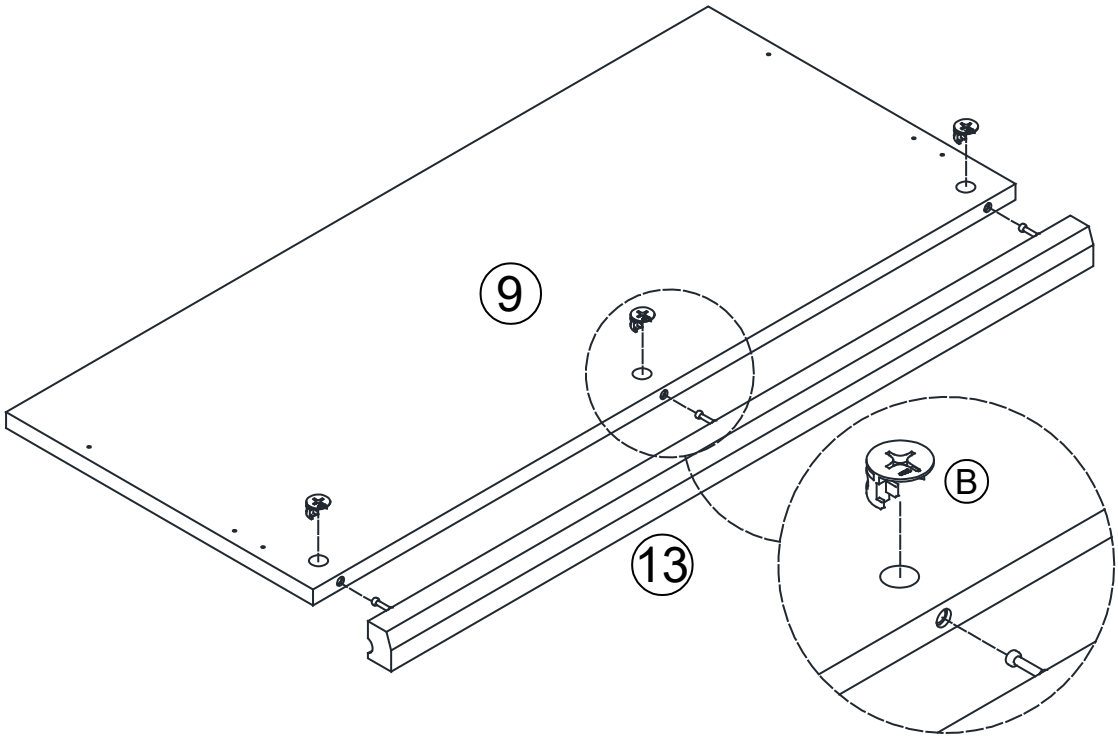

16

Ⓖ x 6pcs



M4*15mm

Ⓟ x 1pc

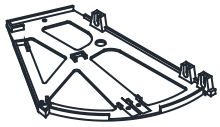

Ⓠ x 1pc

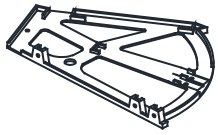

Noted the length of screw(G) is 15mm

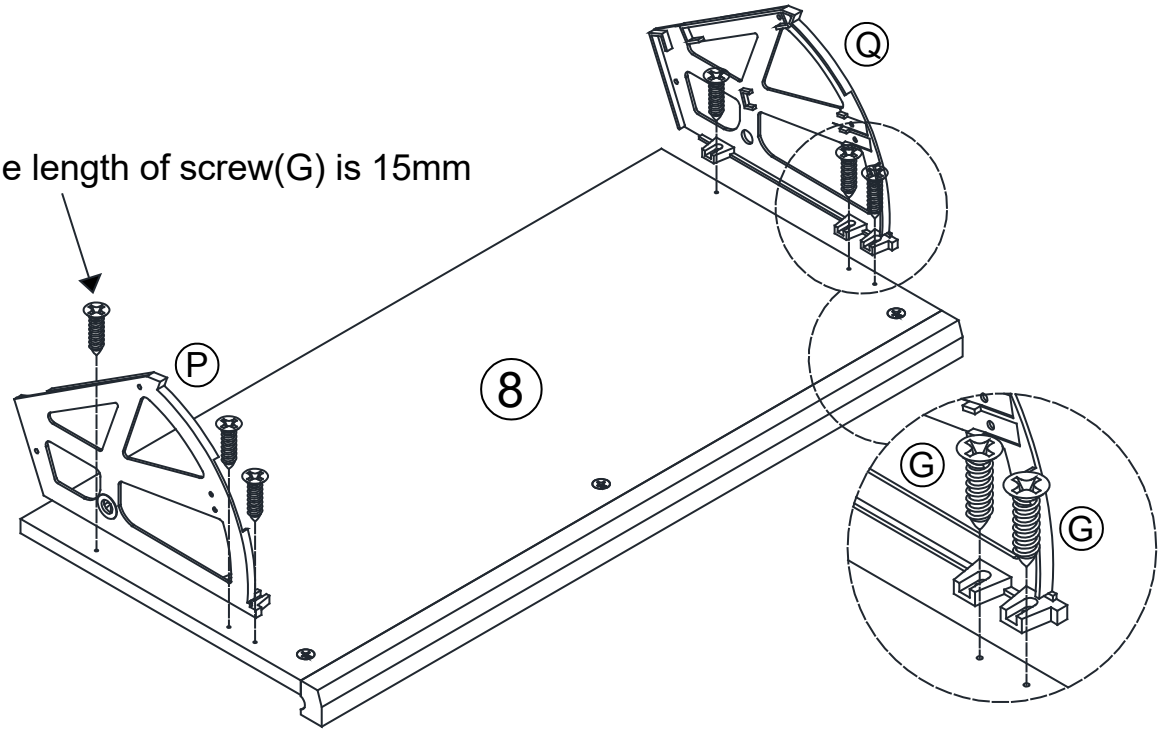

17

Ⓖ x 6pcs



M4*15mm

Ⓟ x 1pc

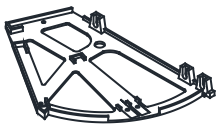

Ⓠ x 1pc

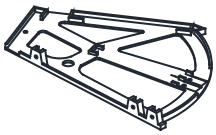

Noted the length of screw(G) is 15mm

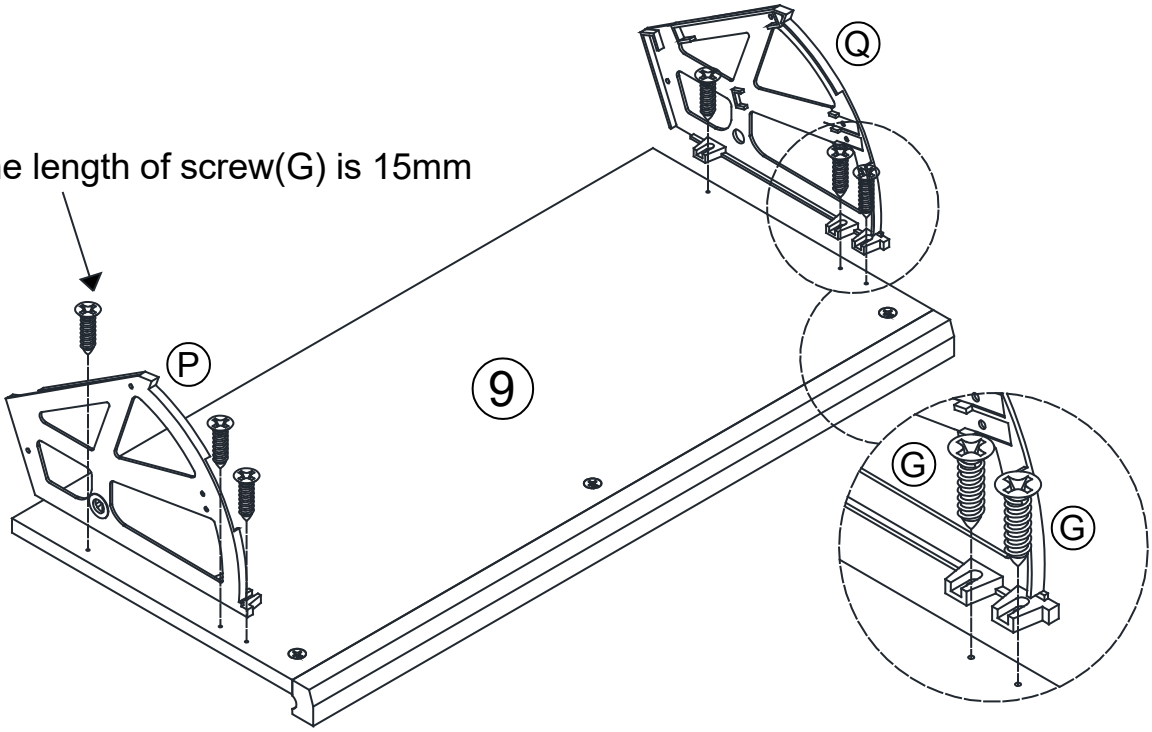

18

Ⓗ x 2pcs

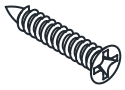

M3*20mm

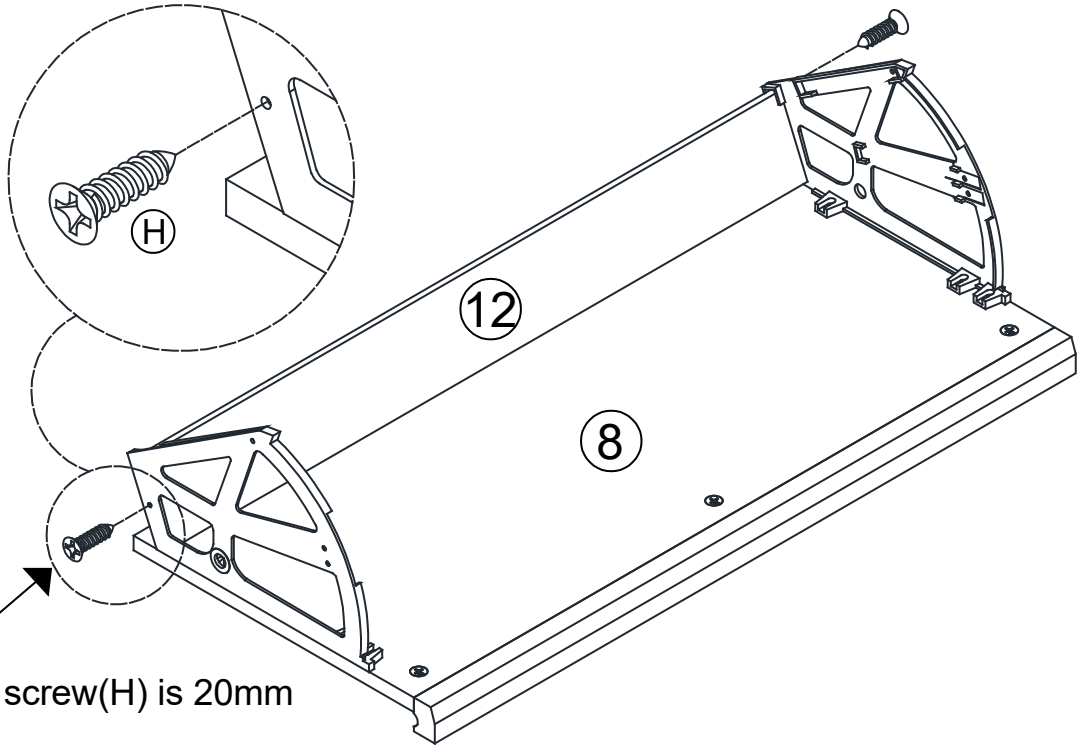

Noted the length of screw(H) is 20mm

19

Ⓗ x 2pcs



M3*20mm

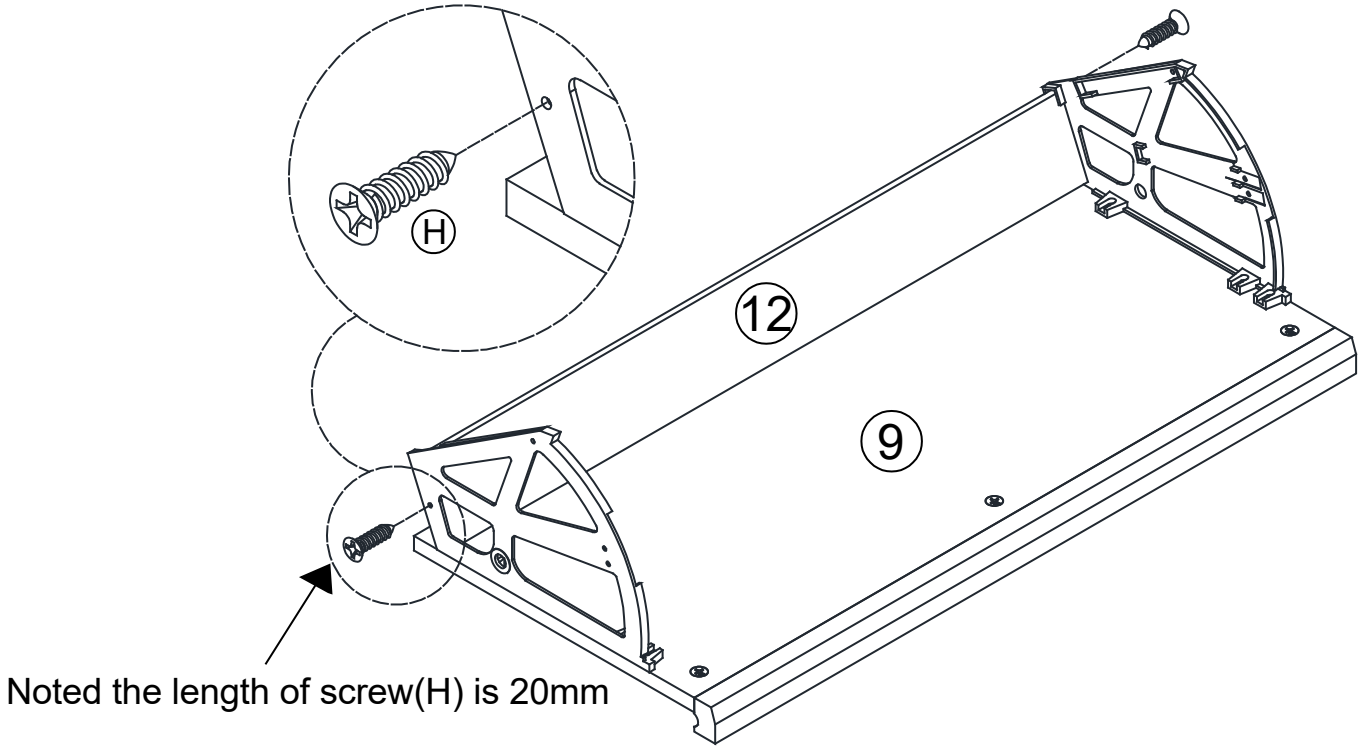

Noted the length of screw(H) is 20mm

20

Ⓖ x 2pcs



M4*15mm

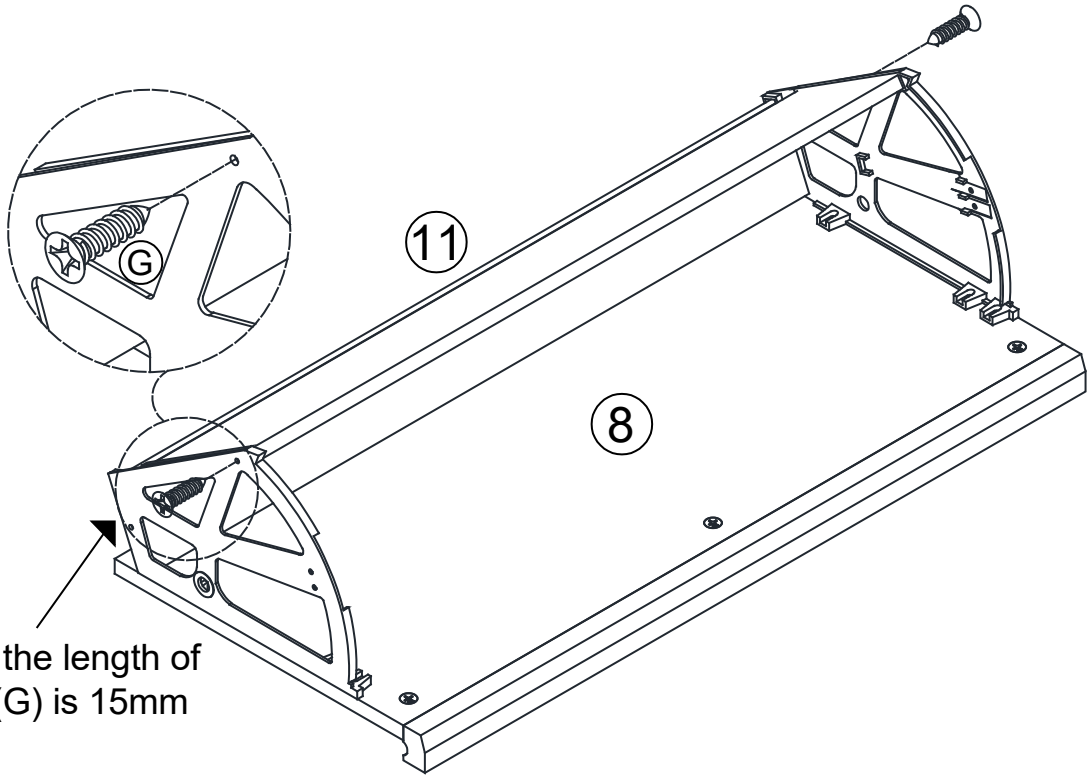

Noted the length of screw(G) is 15mm

21

Ⓖ x 2pcs



M4*15mm

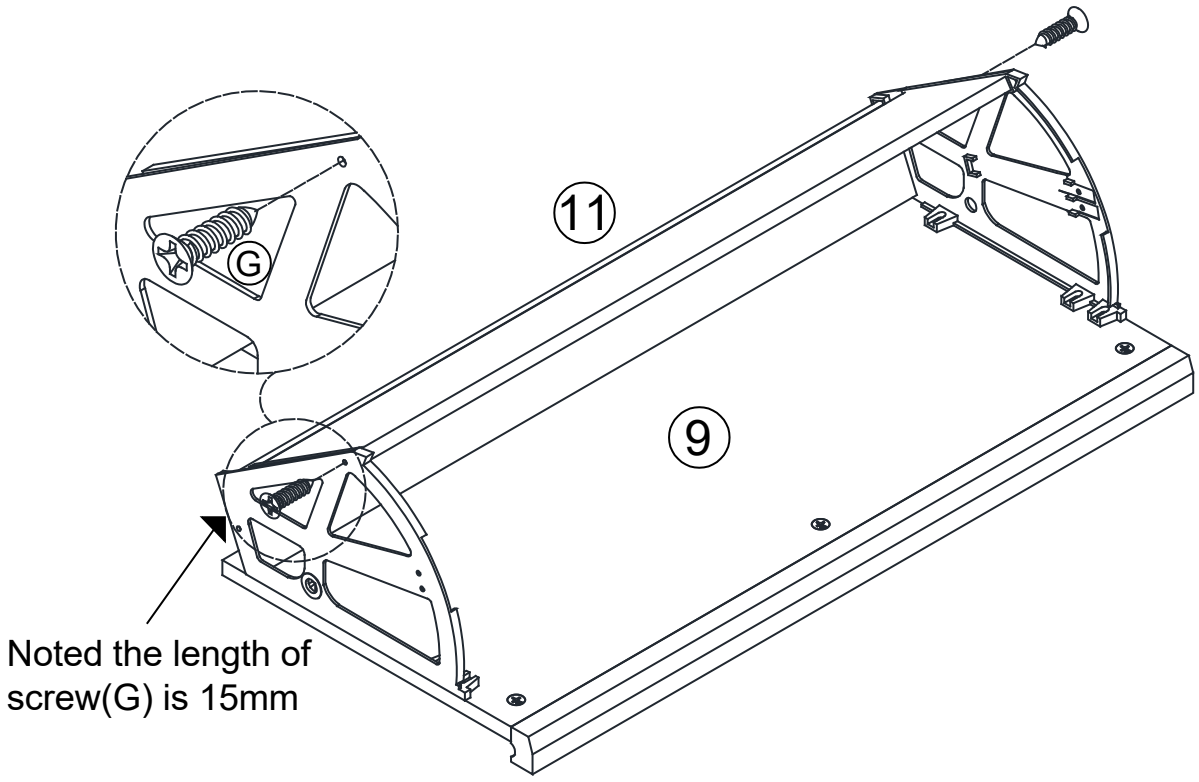

22

Ⓟ x 2pcs

① 

② 

Ⓠ x 2pcs

① 

② 

Pls noted team work is need here

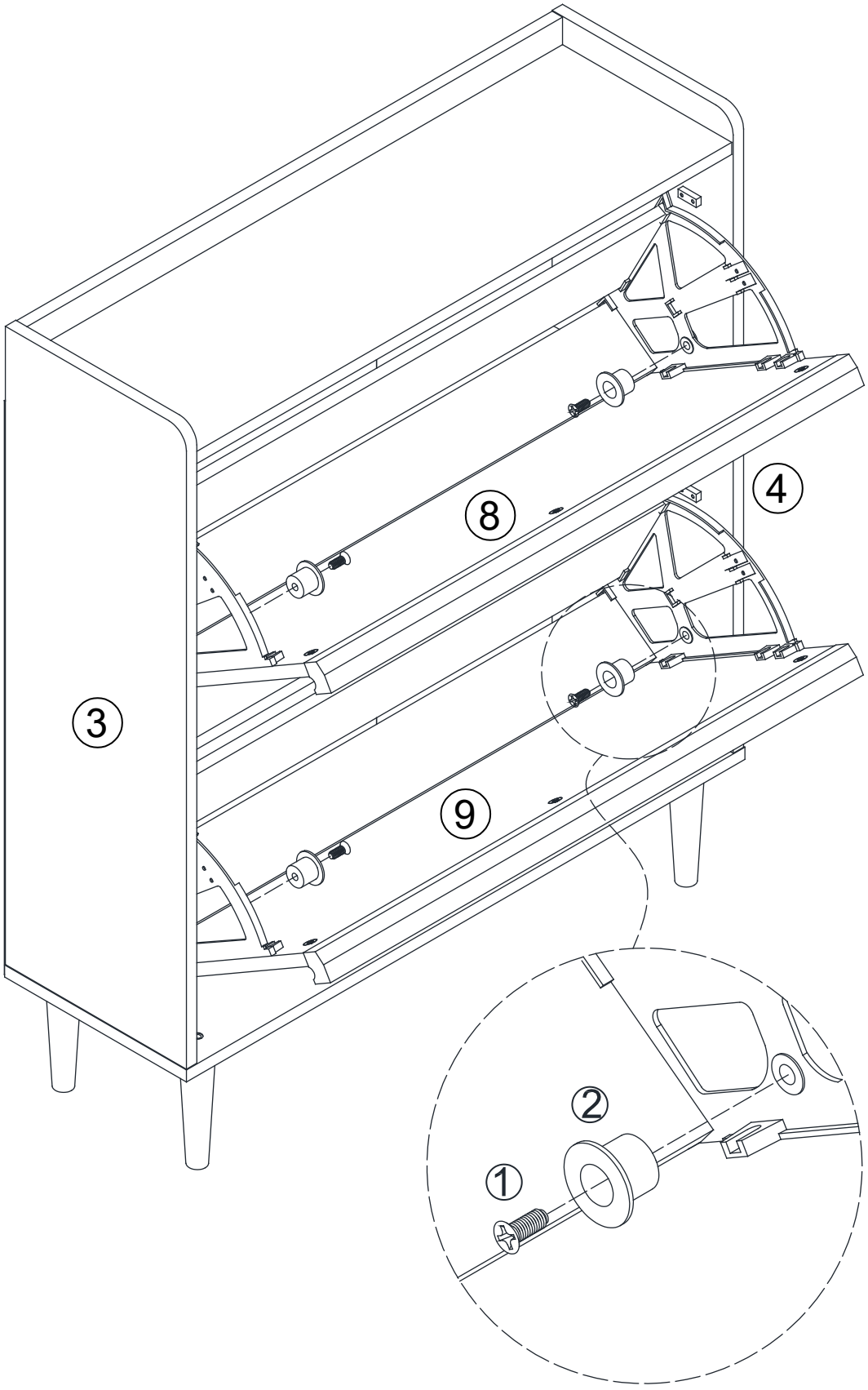

23

Ⓖ x 4pcs



M4*15mm

Noted the shelf #11 is ok for adjustable.

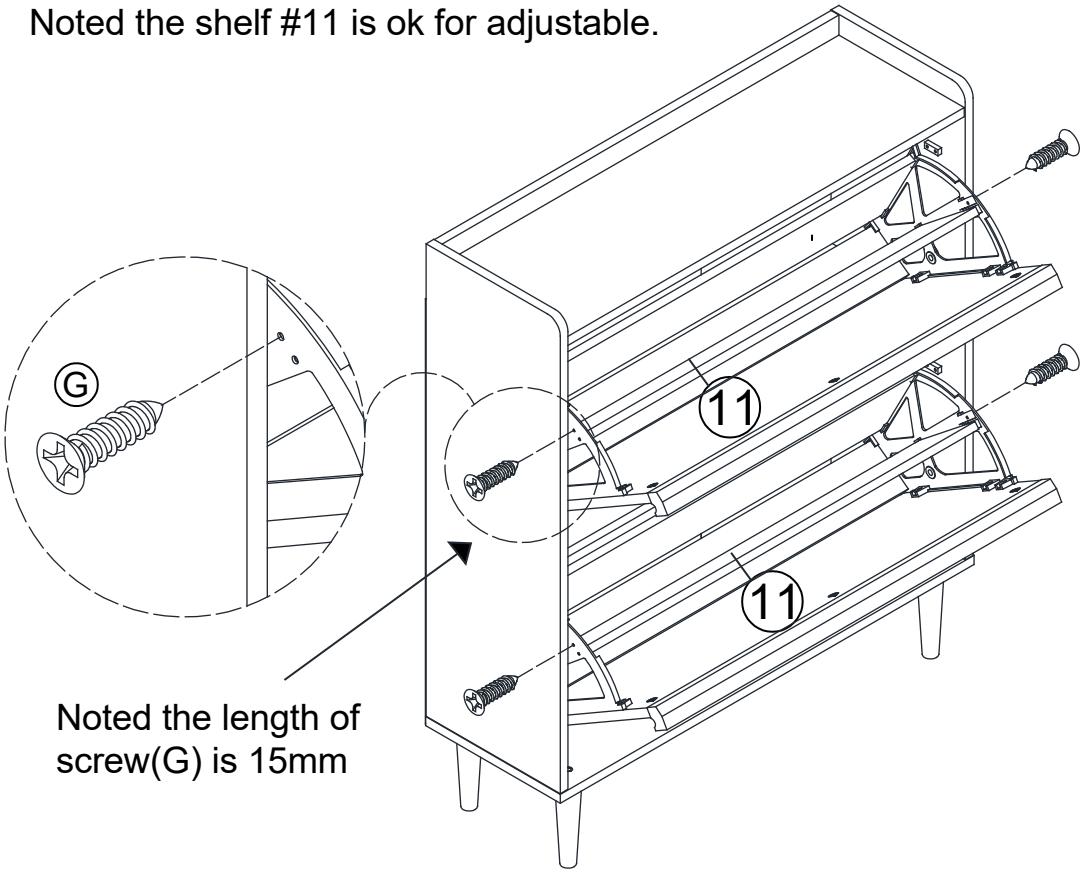

Noted the length of screw(G) is 15mm

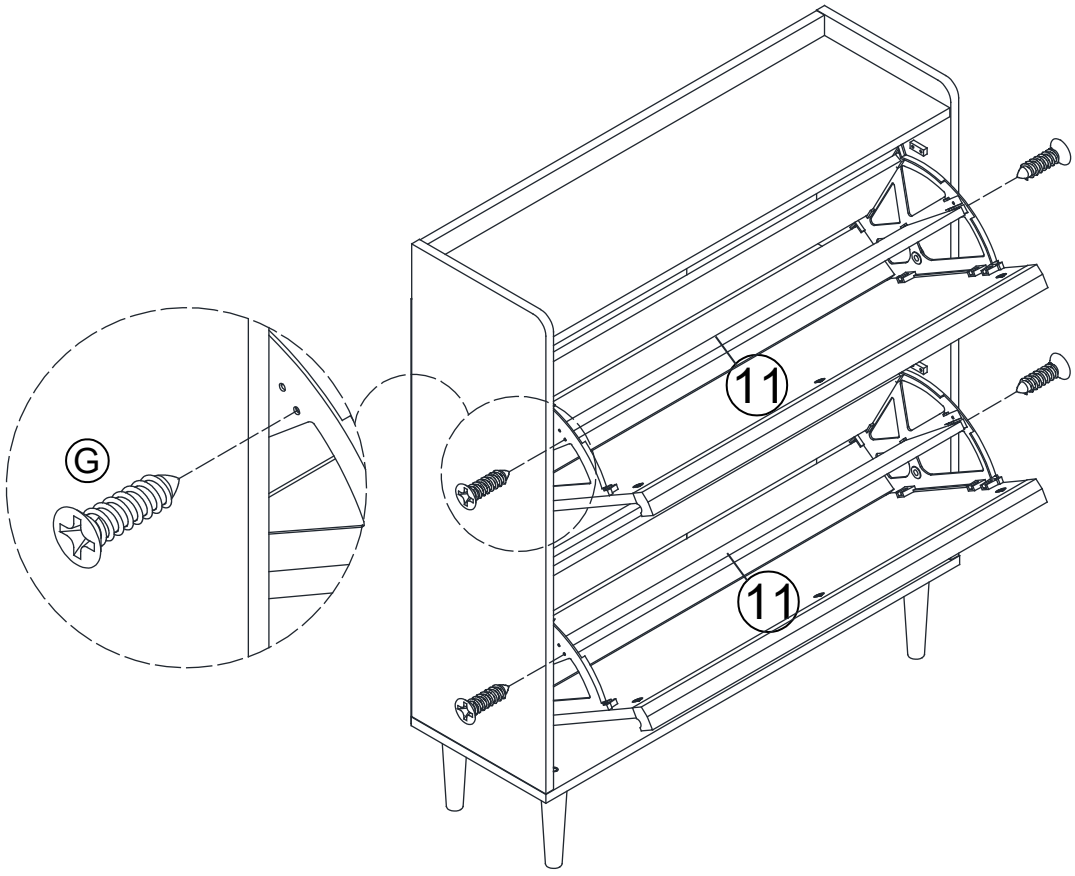

24

Ⓒ x 18pcs



Peel a CAM COVER from the
CAM COVER CARD and stick
one onto each visible HIDDEN CAM.

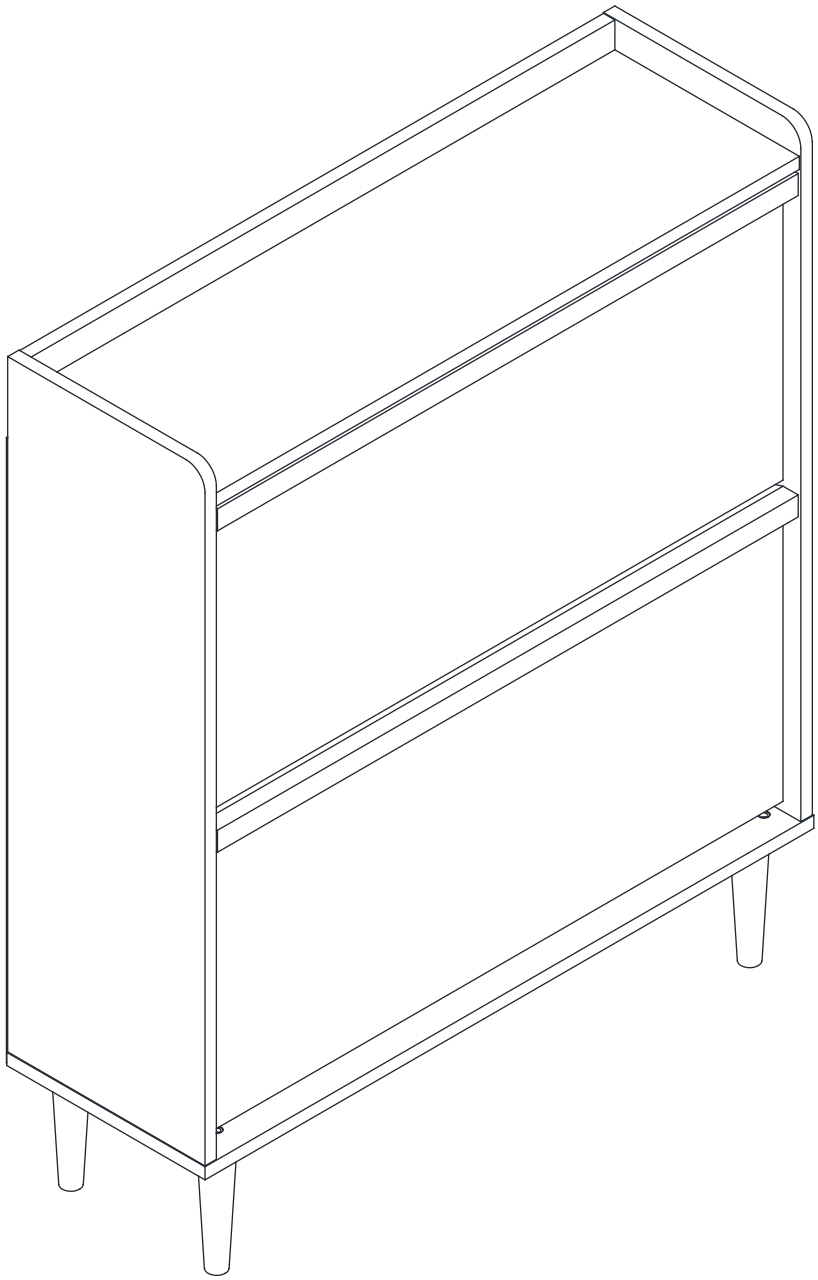

GARVEE

support@garvee.com