DIMENSIONS

Streamline

Rough-In Dimensions

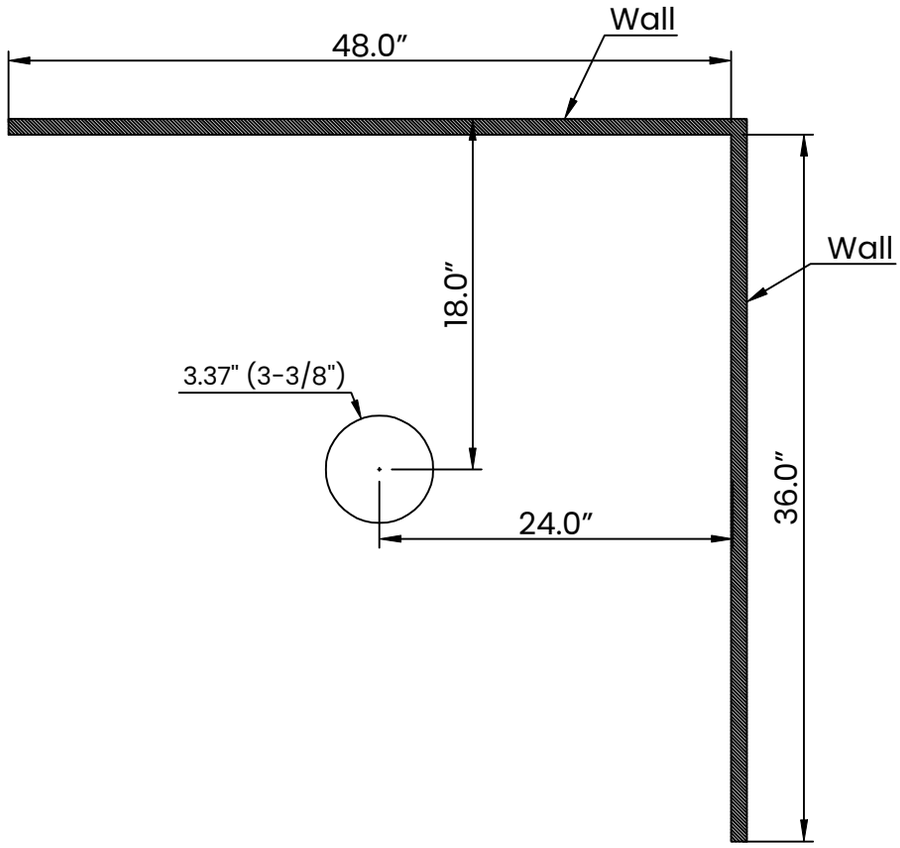

Product Dimensions

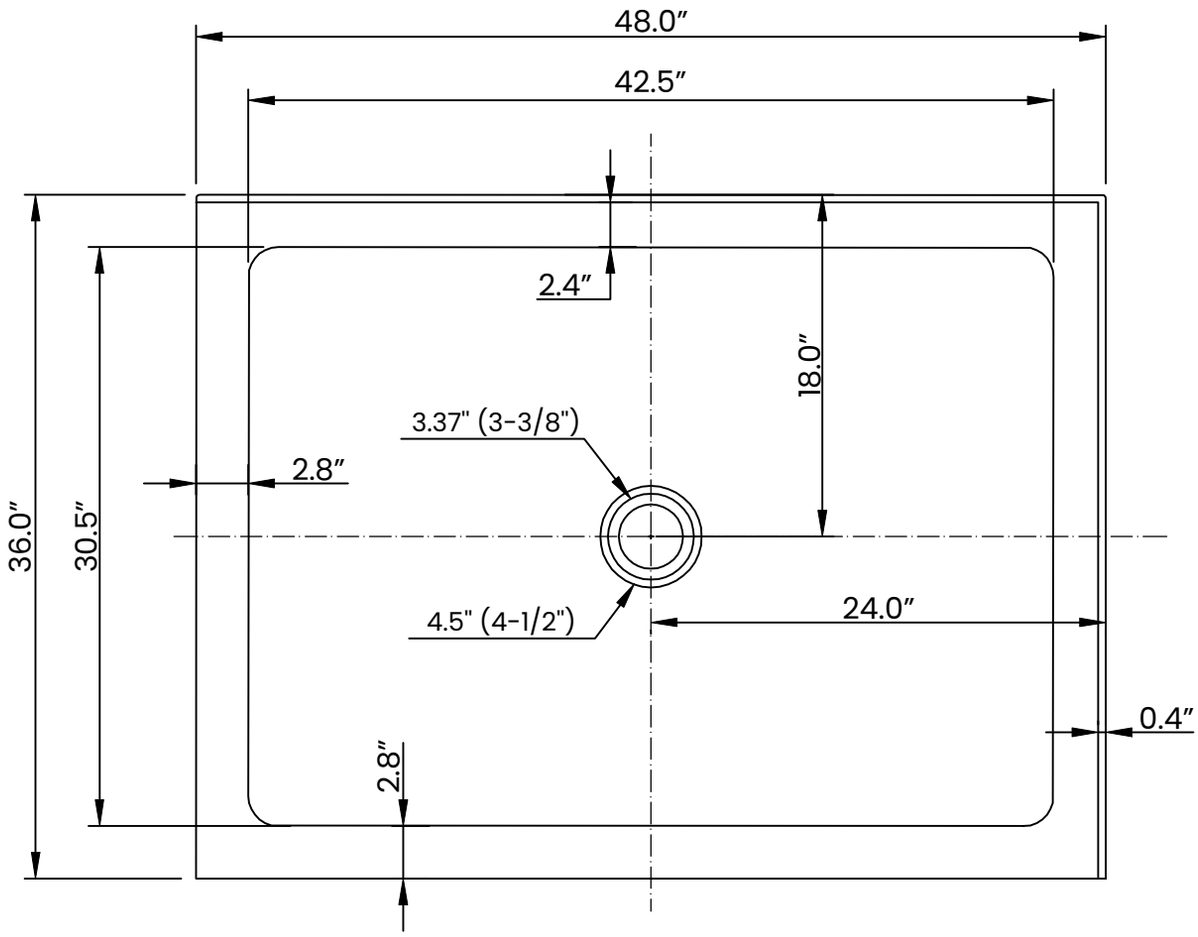

Model number:
NT-242-48WH-CR

DIMENSIONS

Streamline

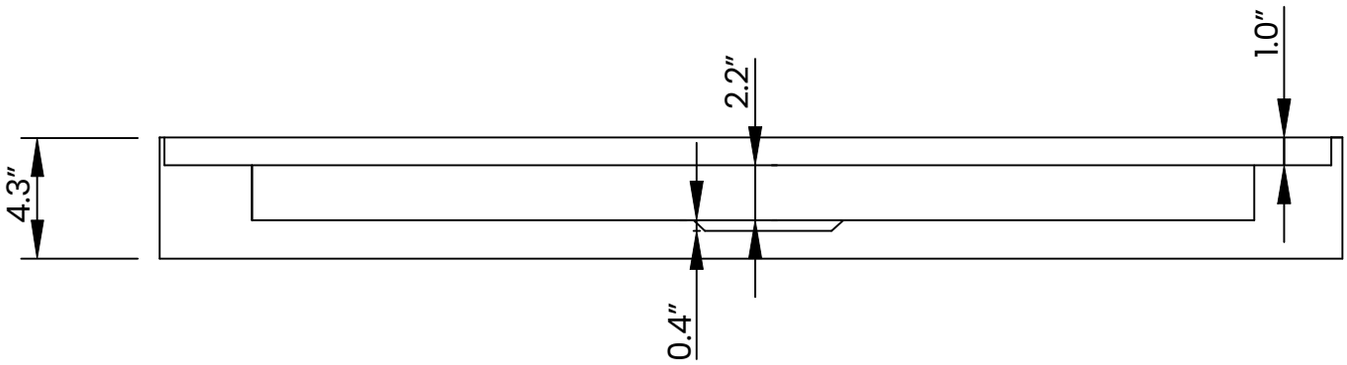

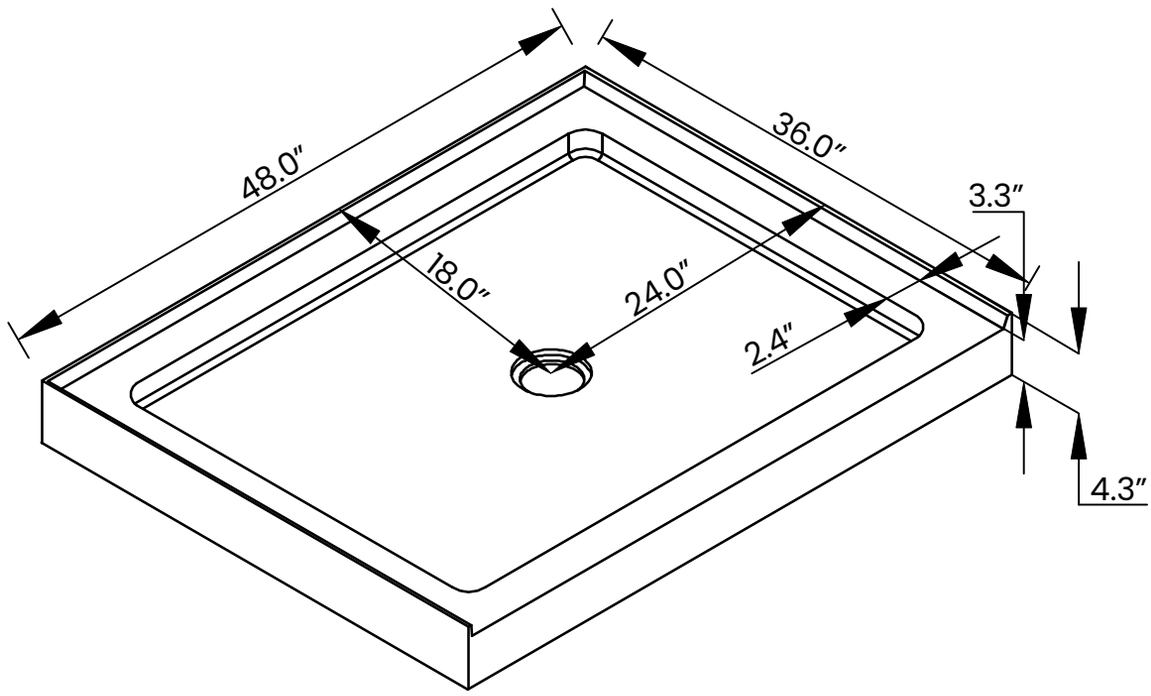
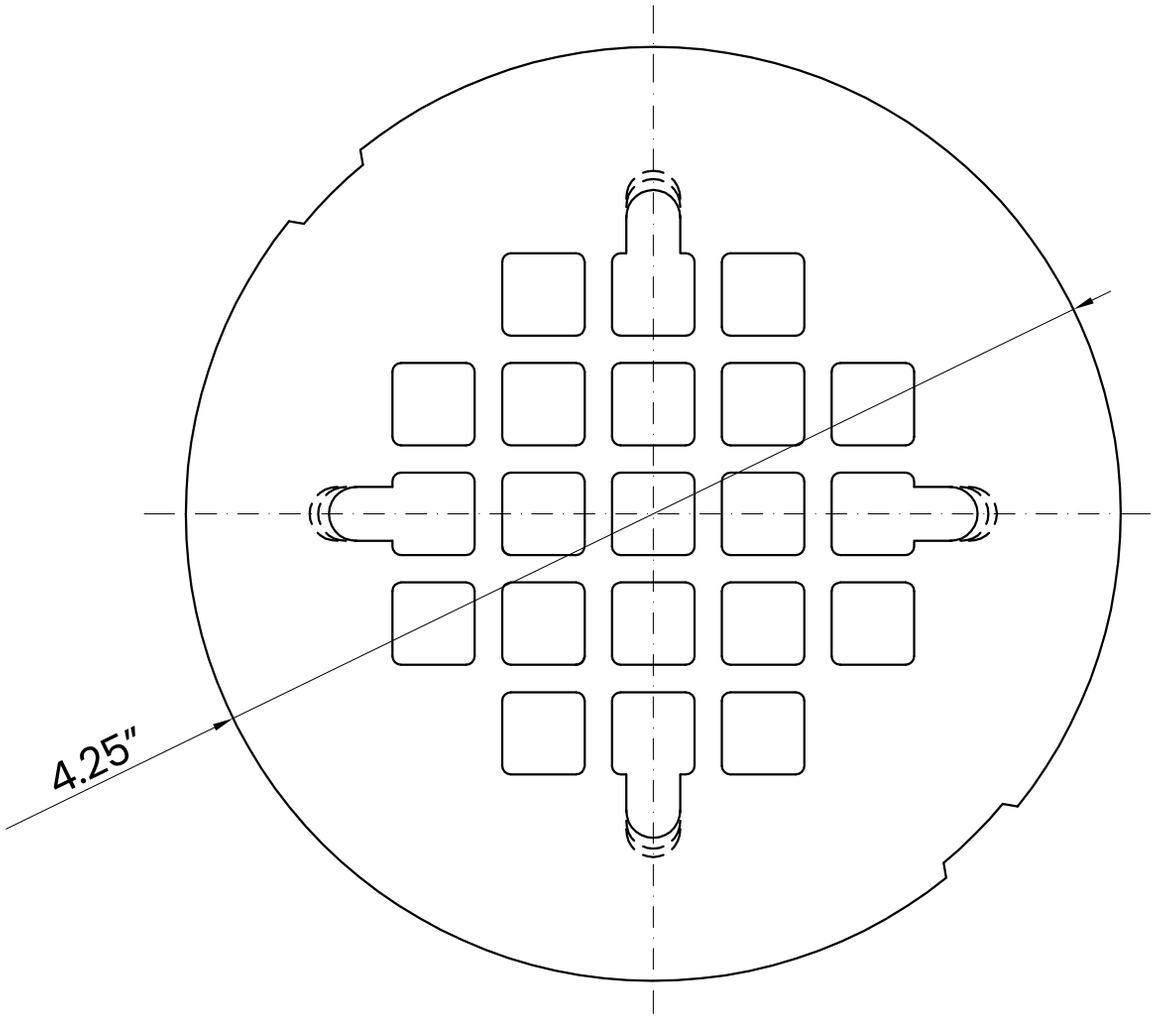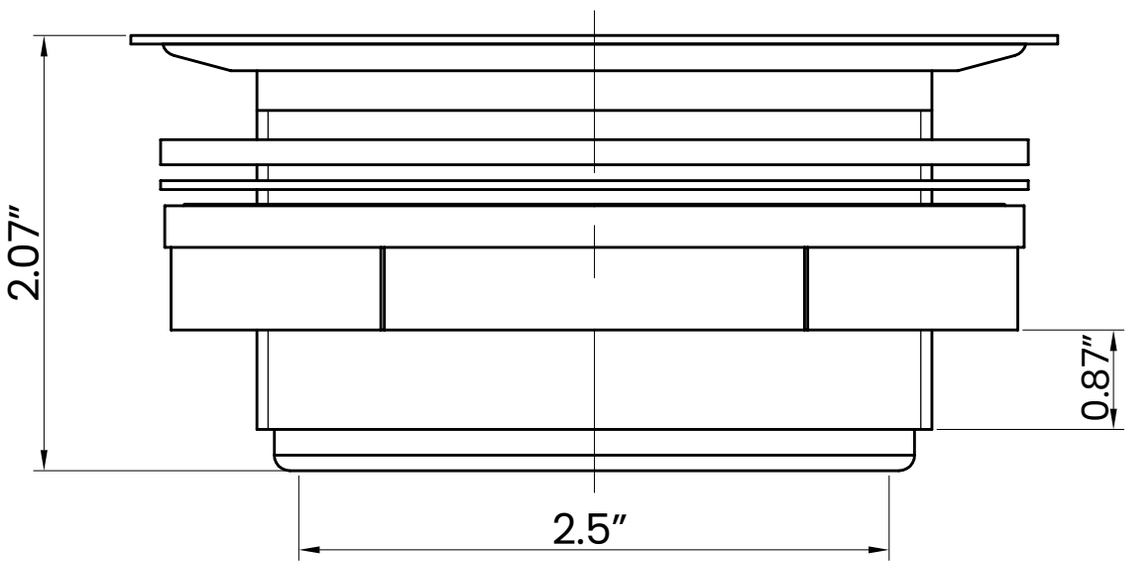
DIMENSIONS