Bar Stool

ASSEMBLY INSTRUCTIONS

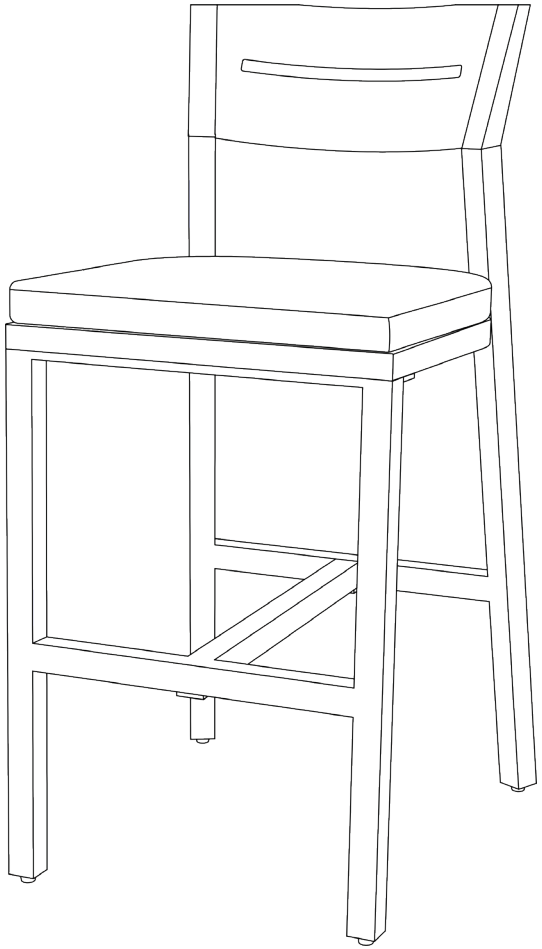

BEFORE ASSEMBLY:

· Please read these instructions carefully before starting assembly. We suggest you carry out the assembly on a soft surface like a carpet, so as to avoid scratching the paint. Keep children away during assembly. This item contains small parts which can be swallowed by children.
· This product was made for the explicit purpose of providing outdoor function and is not to be used as a toy. This product is for residential use only. This product is NOT intended for commercial use; unintended use will void the warranty.
· This product is not intended for use during inclement or severe weather, that includes but is not limited to rain, hail, sleet, snow, wind, freezing conditions and extreme heat.
· Please note because of the nature of cast metal, you may find roughness on the surface which enhances the beauty of the product and is not a defect.
· Aluminum is soft metal, please do not use power tools, and over tighten may strip threads or break the parts.
· When not in use, store and/or cover the product in a cool dry location. Do not locate the product near any sort of high heat. Do not use the product as a support.
· Children under the age of 10, who are near the product, should be supervised by a competent adult at all times.
· Do not discard any of packaging until you finish the assembly. Keep the assembly instructions for future reference or warranty.
· **Minor product improvements may be made without prior notice.**

PARTS LIST:

AX2 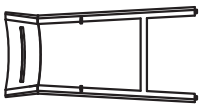 Back	BX2 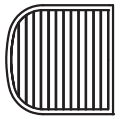 Seat	CX2 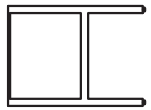 Front Leg	DX2 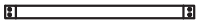 Support Bar
EX20  Spring Washer	FX20  Washer	GX12 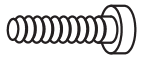 Bolt(M6*20)	HX8 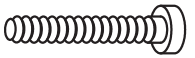 Bolt(M6*25)
IX20  Bolt Cap	JX2  Cushion	KX2  Allen Wrench	

Step 1: Place all the parts on a clean and soft surface, identify all the parts and hardware kits against parts list. Assemble Front Leg(C) and Seat(B) with parts(F,E,G) & parts(F,E,H) in the order displayed in Fig(1). Remember not to firmly tighten all the bolts before they are all set up.

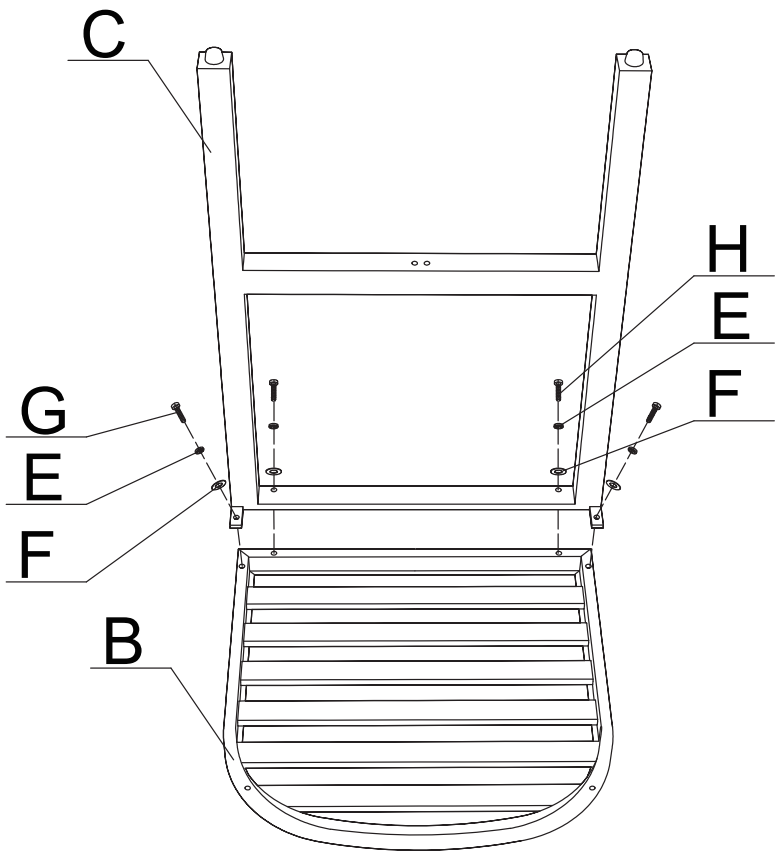

(1)

Step 2: Assemble Back(A) and Seat(B) with parts(F,E,H) in the order displayed in Fig(2). Remember not to firmly tighten all the bolts before they are all set up.

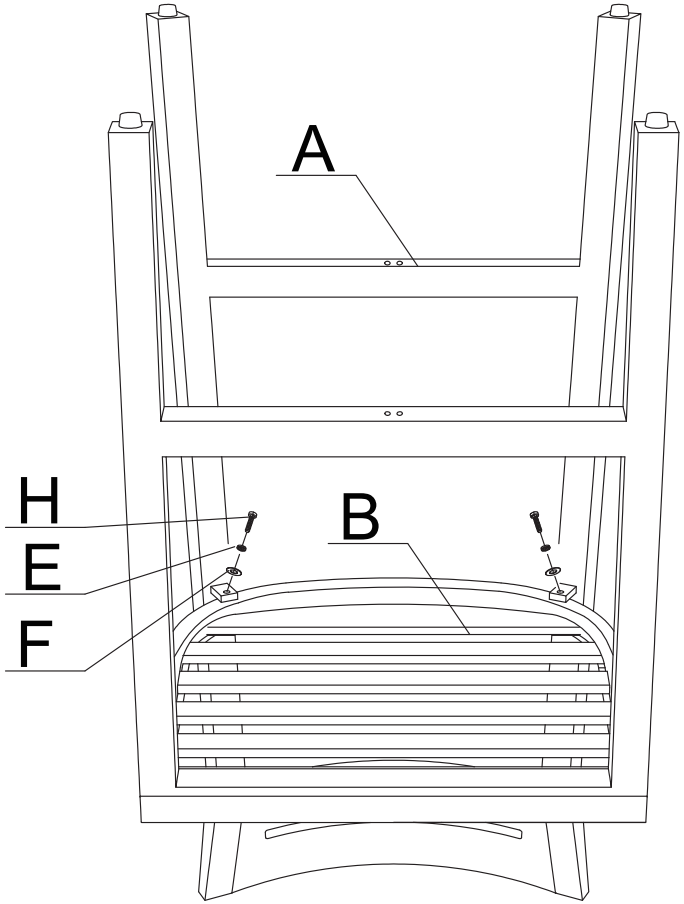

(2)

Step 3: Connect Fixed Ring (D) to the Leg (C) using parts (F,E,I) in the order shown in Fig(3), assembling them until an initial connection is established.

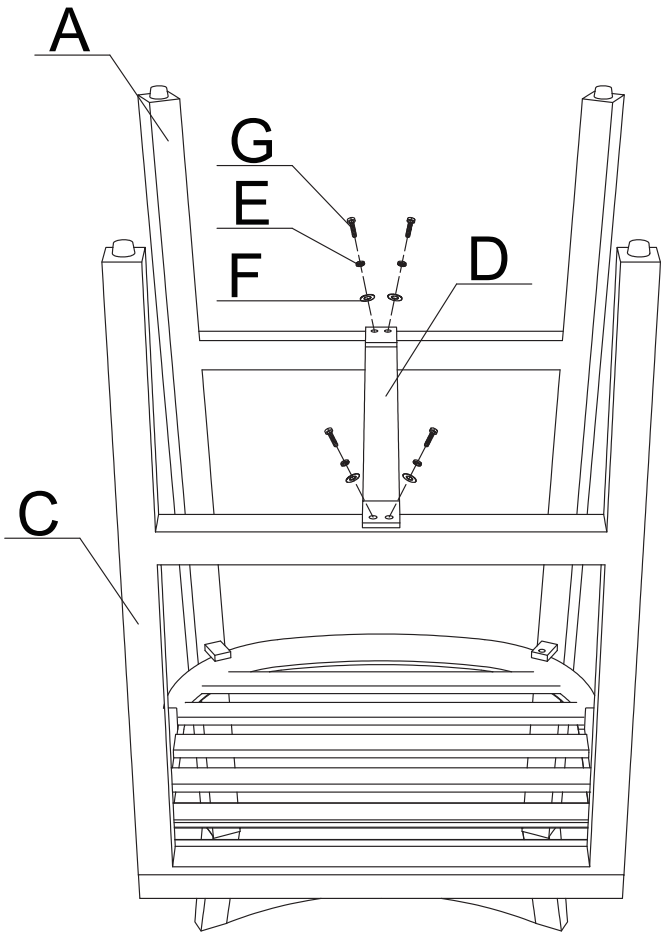

(3)

Step 4: Then firmly tighten all bolts displayed in Fig(1,2,3) with Allen Wrench(K). Do not over tighten bolts, it will cause the damage of product without warranty, put all the Bolt Caps(I) on the Bolts in the order displayed in Fig(4) .

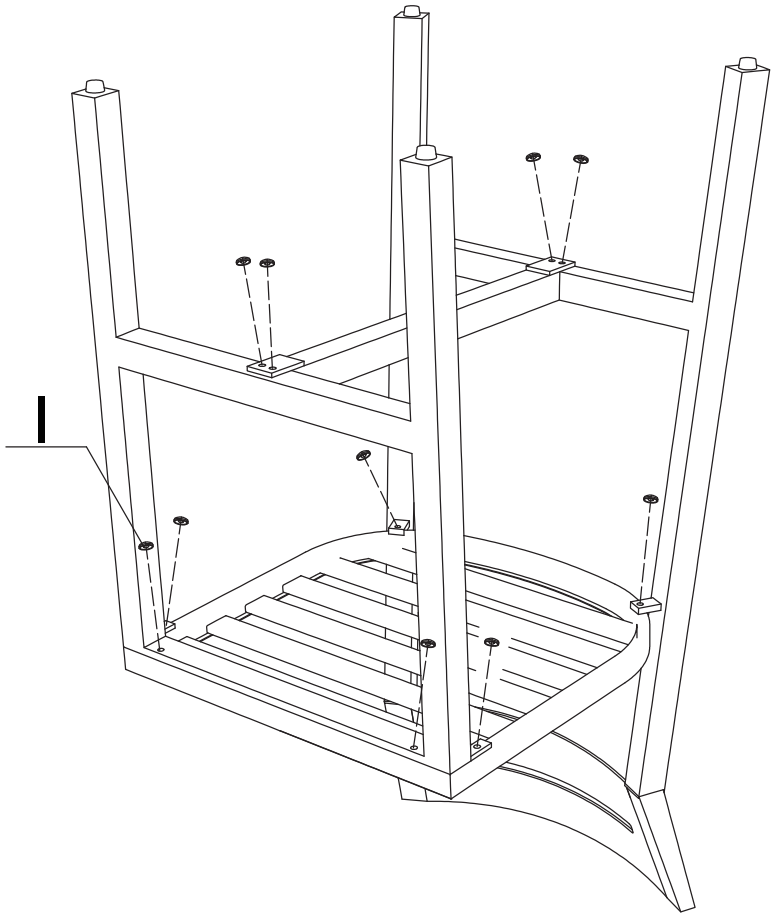

(4)

Step 5: Then tie the Cushion(J) to the chair. Adjust the Non-Slip Pads till the chair is stable. Your chair should be ready for use.

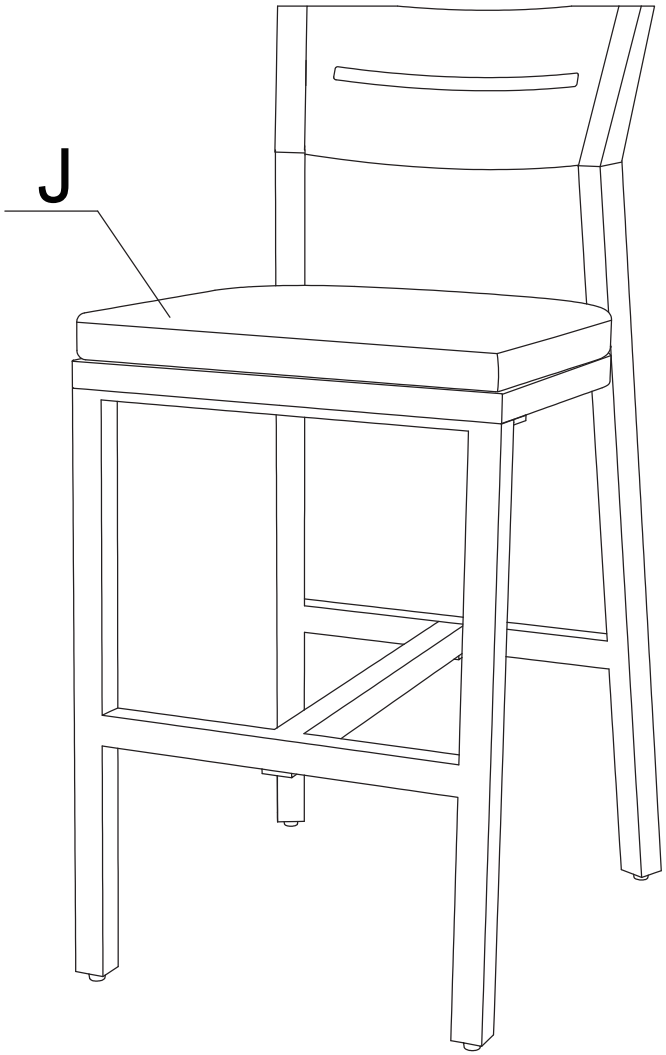

(5)