Connecting

6

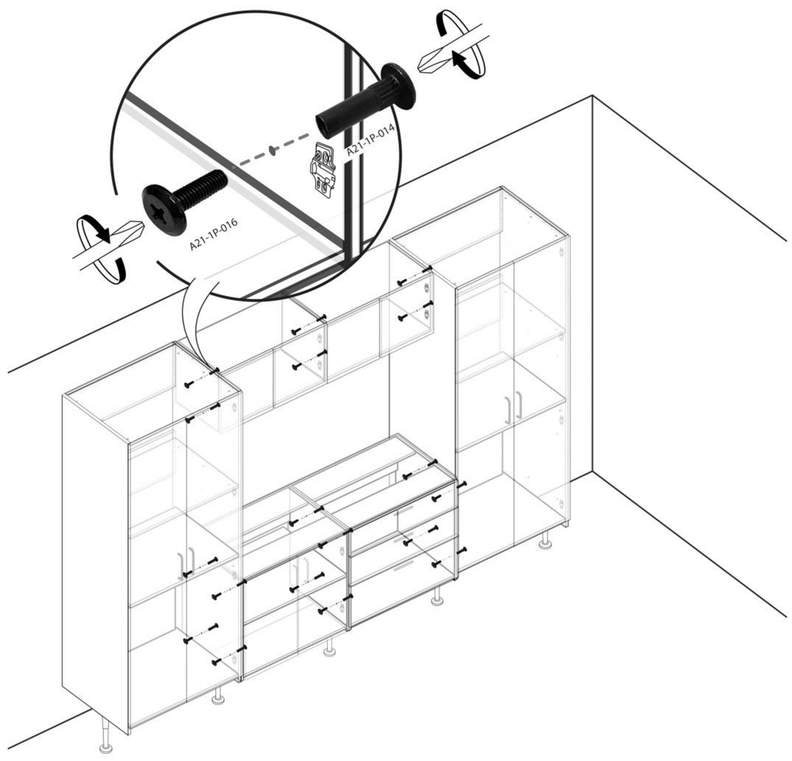
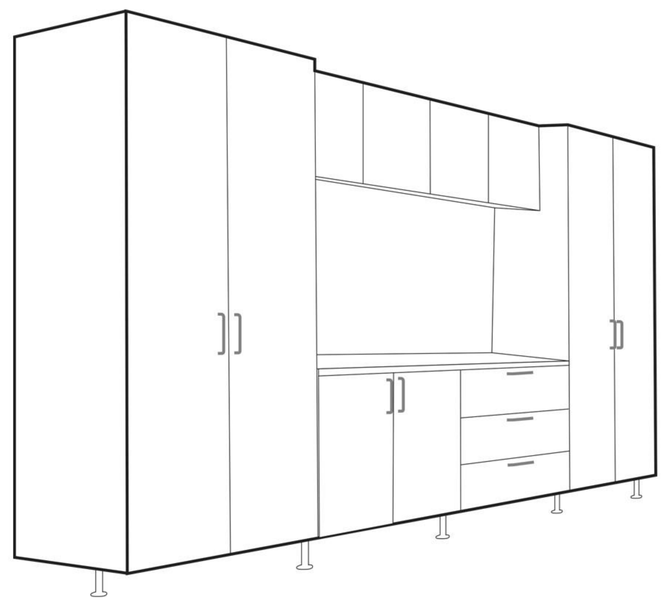
7