Metal Roof
Cedar Wooden Gazebo 12X20FT

SKU: A001G078-1 A001G078-2 A001G078-3 A001G078-4 A001G078-5 A001G078-6 A001G078-7

ASSEMBLY INSTRUCTIONS

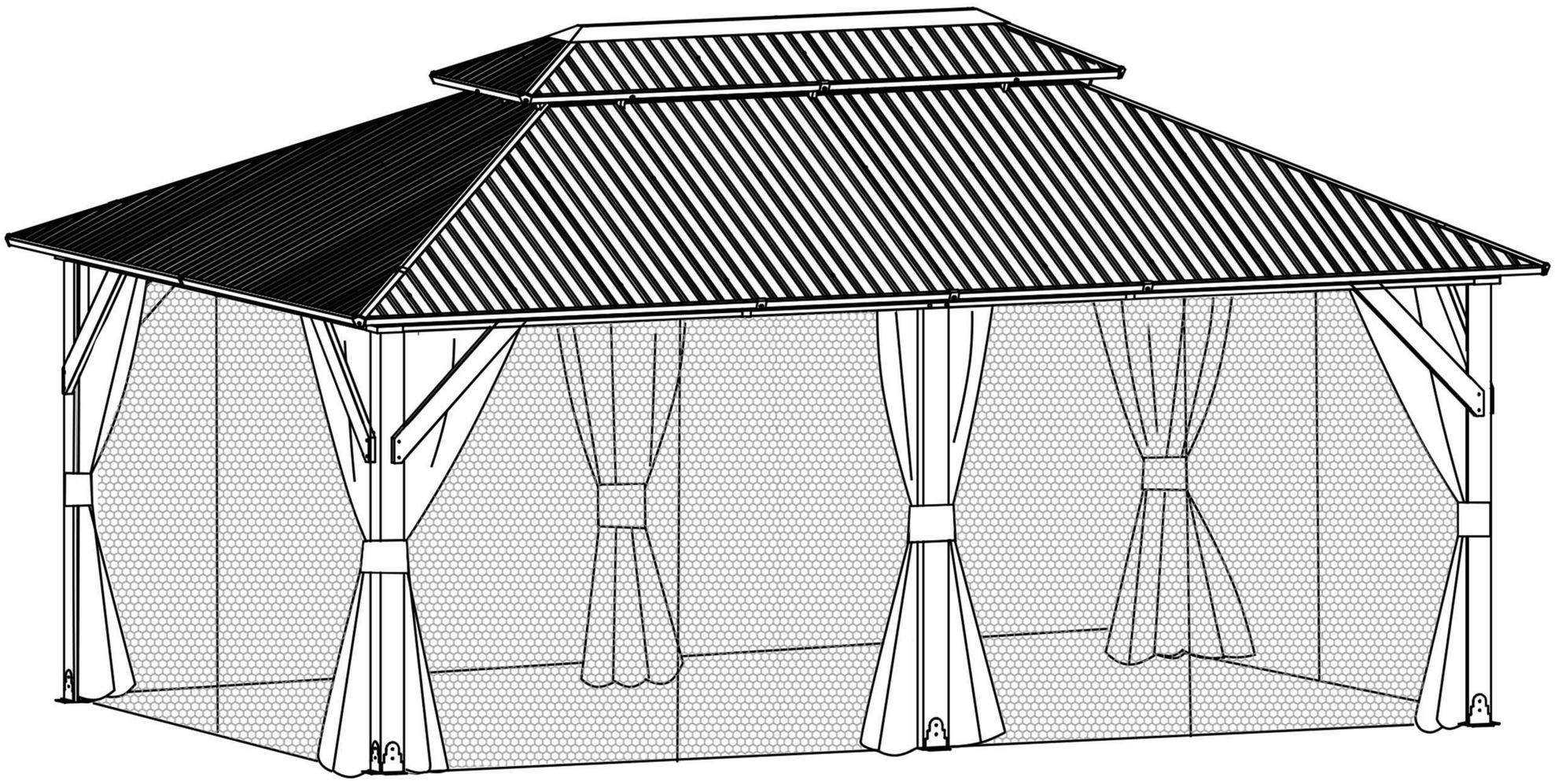

Please check the number of parts in the following accessory catalogue when unpacking. We have sent you more small parts for spare. If there is any missing or any questions about the installation. Please feel free to contact us. We will reply within 24 hours.

E-mail: cs.helper01@gmail.com

TOOLS RECOMMENDED

*NOTE: The recommended tools are not included in boxes and need to be prepared by yourself.

- DRILL
- RUBBER MALLET
- STEPLADDER (6.5Ft Or More)
- SAFETY HAT
- GLOVES
- SAFETY GOGGLES

⚠ ATTENTIONS

- Since it is easy to lose many small accessories during the installation, please collect all the screw accessories before the assembly is completed
- To better align the screws for practical situations,do not fully tighten screws initially
- Please reinforced the Gazebo and do not use in heavy winds or inclement weather
- Make sure all screws are tightented before use and check all screws, buckles and straps every 90 days
- Two or more people are required for assembly
- Please clear the snow off the roof in time for the heavy snowfall and do not use it

Permanent Installation Examples

Our supporting expansion screws can only be used for cement floors, customers need to bring their own special screws if they are used for wood floors

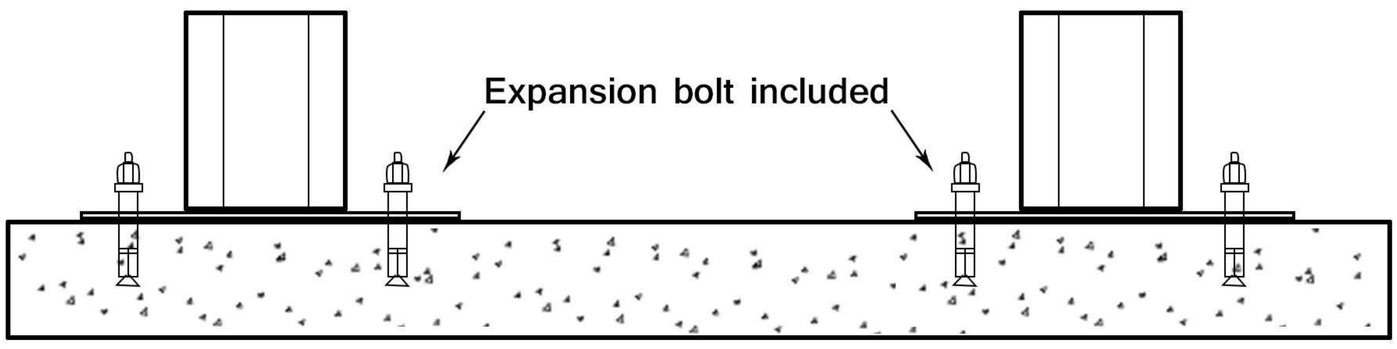

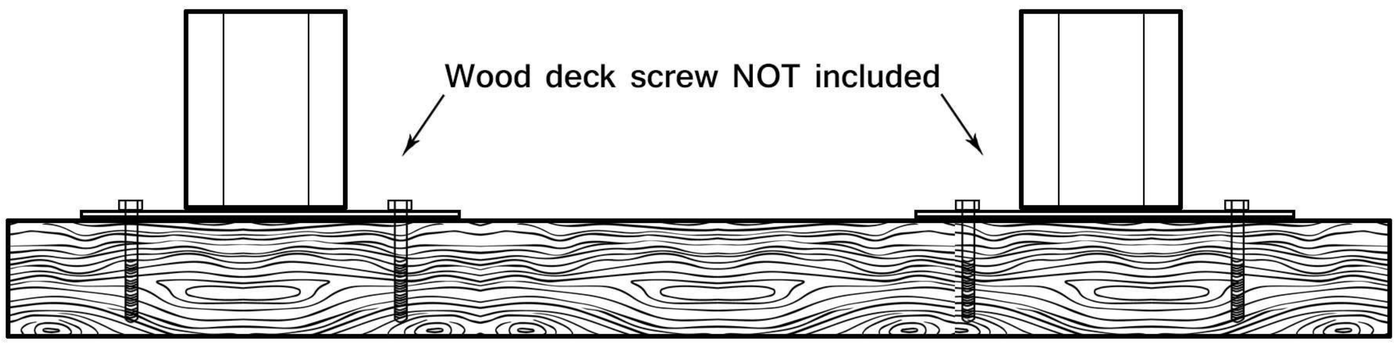

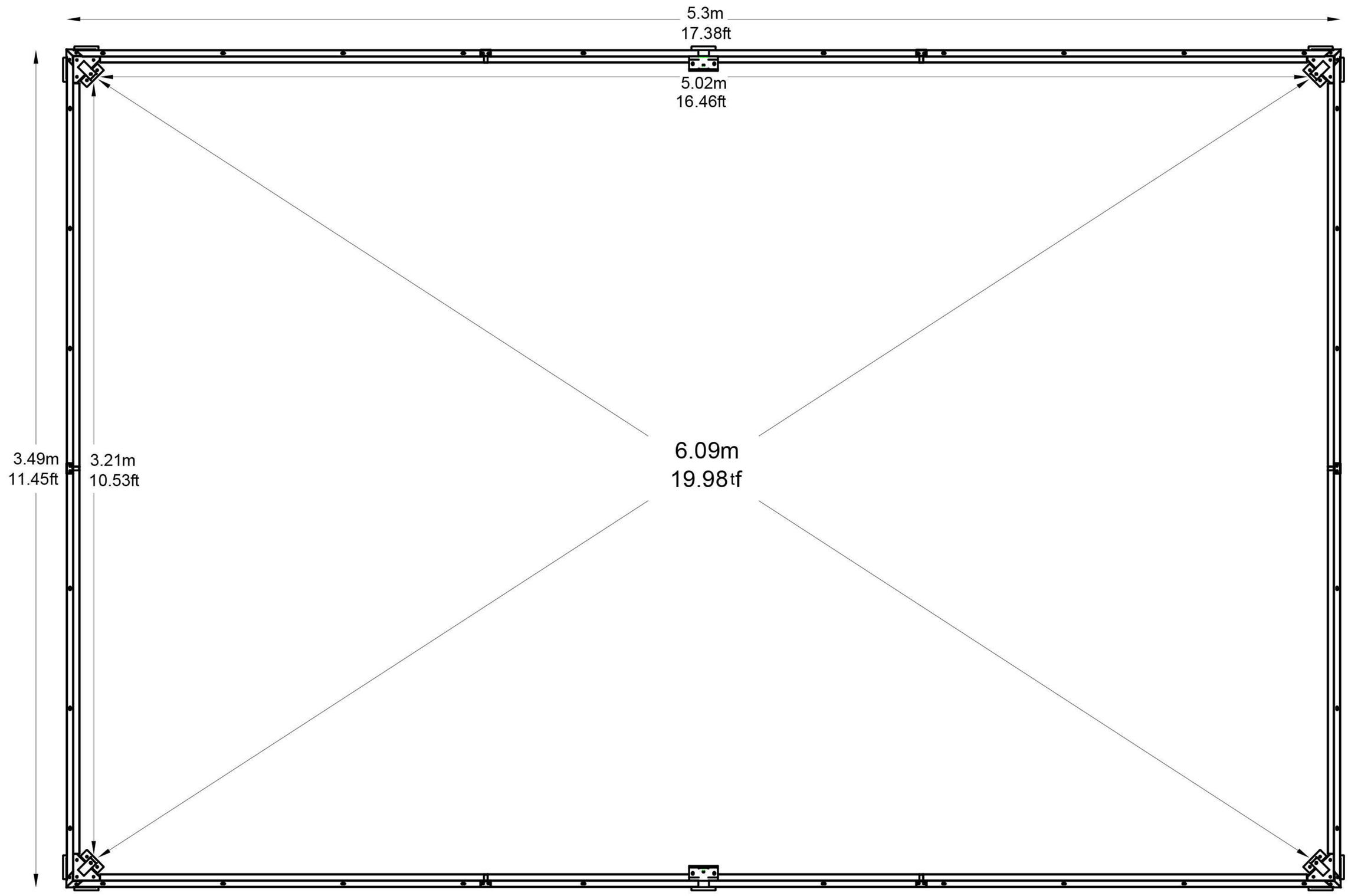

ACCESSORY CATALOGUE

BOX 1 SKU: A001G078-1

Item no.	Reference Image	Qty.
A	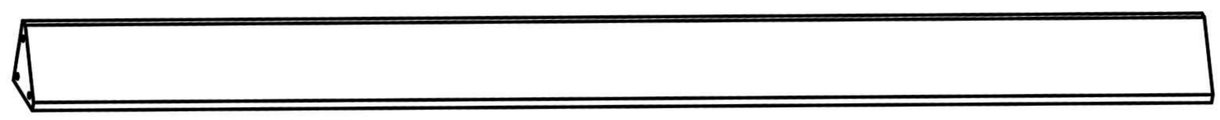	4
A1	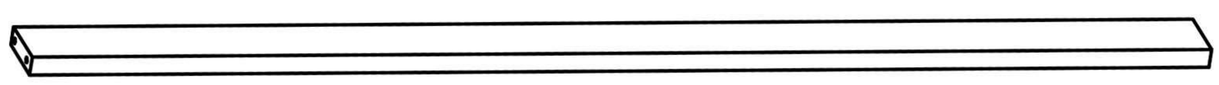	2
X	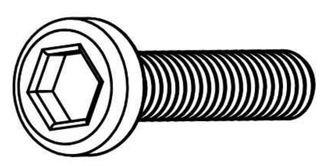 M8X50mm	16
1	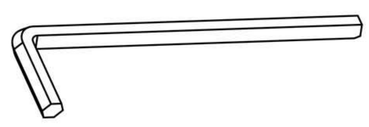	1

BOX 2 SKU: A001G078-2

Item no.	Reference Image	Qty.
F	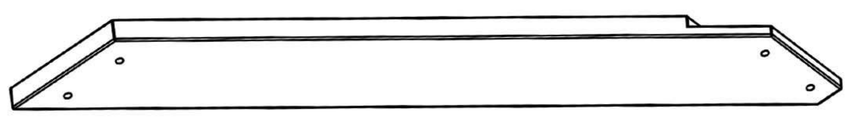	4
F1	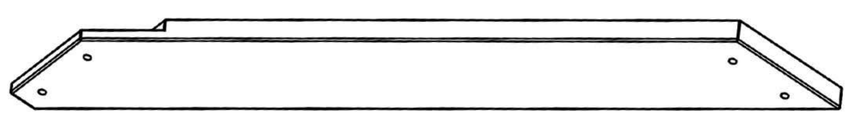	4
B	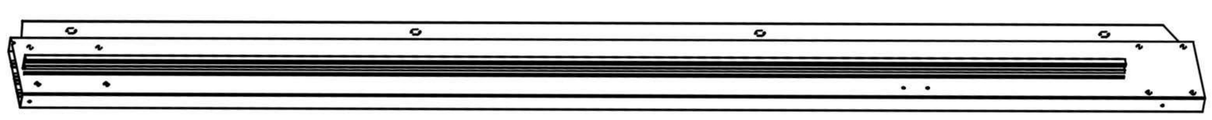	2

Please take care of the screws and contact the after-sales service if there is any problem with the installation or parts.

E-mail: cs.helper01@gmail.com

ACCESSORY CATALOGUE

Item no.	Reference Image	Qty.
B1	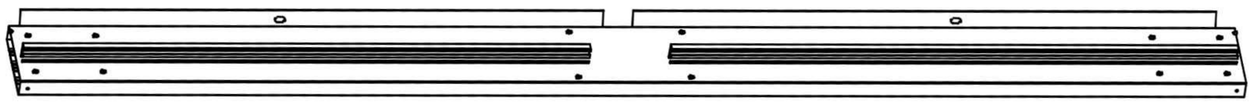	2
B2	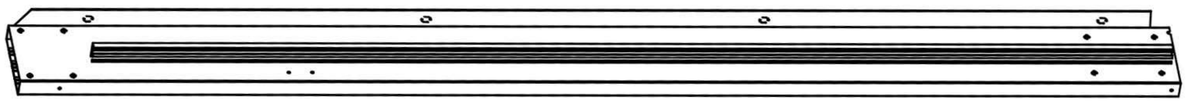	2
C		2
C1		2
Z1	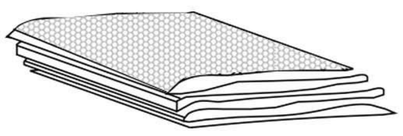	1

BOX 3 SKU: A001G078-3

Item no.	Reference Image	Qty.
K	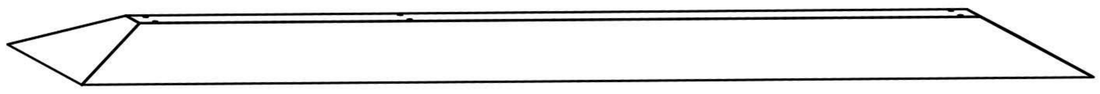	1
K1	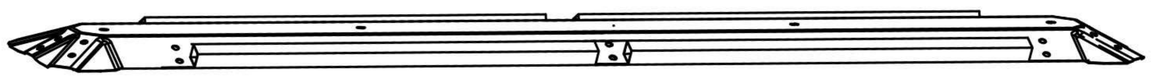	1
Z	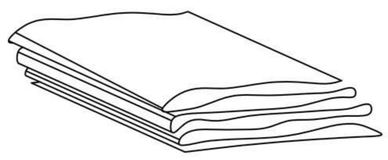	1
Z2	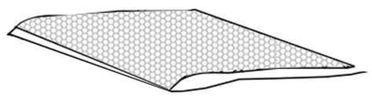	1

BOX 4 SKU: A001G078-4

Item no.	Reference Image	Qty.
E	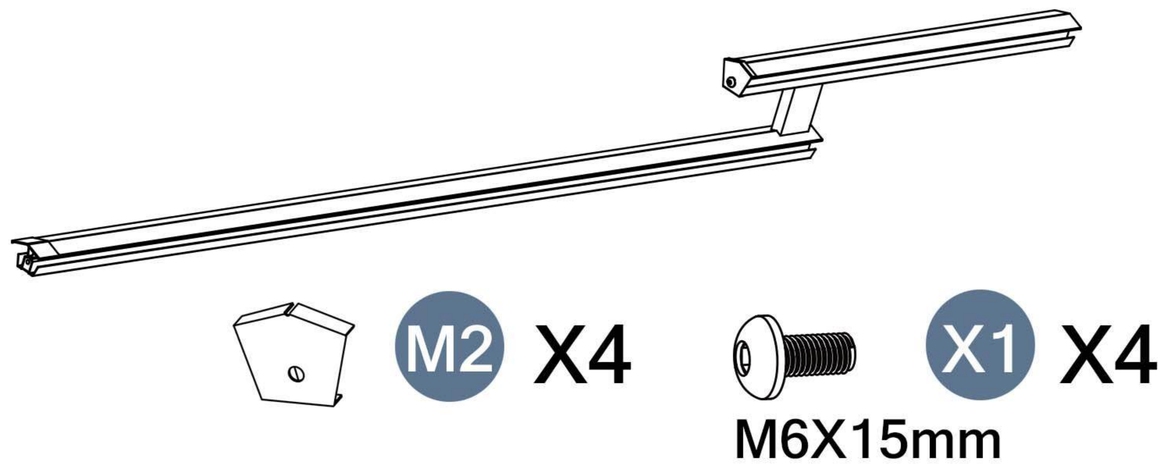	4
E1	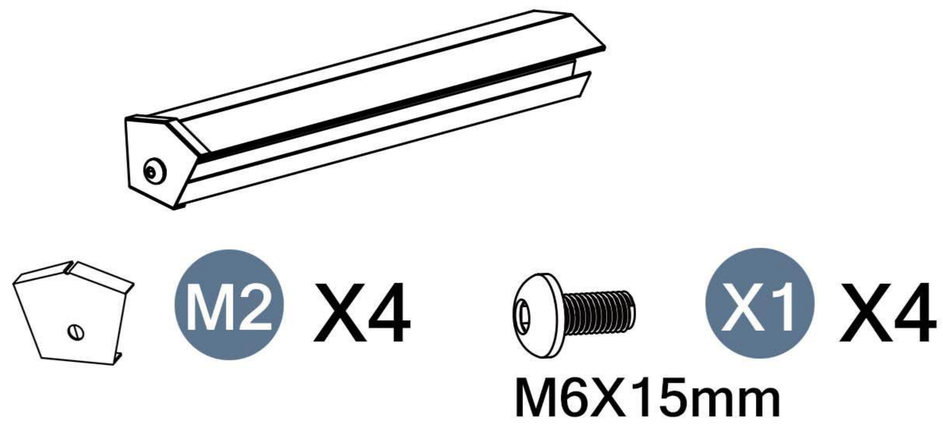	4

Item no.	Reference Image	Qty.
L	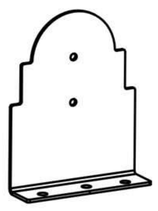	14
M	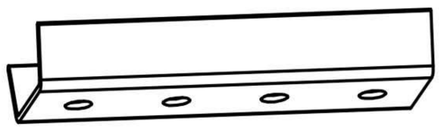	4
M3	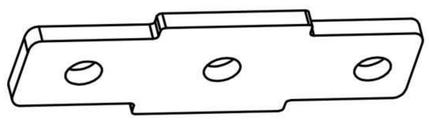	10
M4	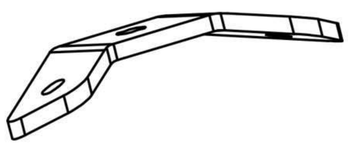	4

Item no.	Reference Image	Qty.
M5	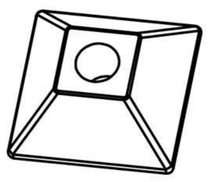	60
J2	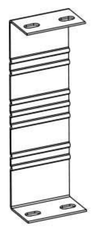	6
M6	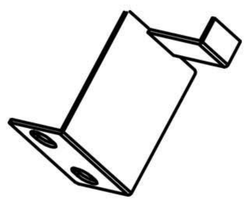	6
M7	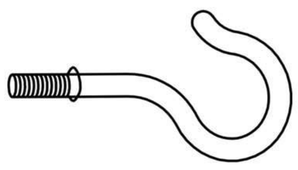	2

ACCESSORY CATALOGUE

Item no.	Reference Image	Qty.
M9	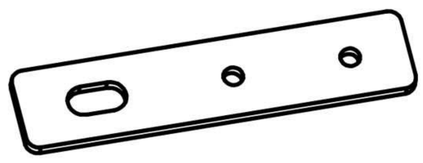	4
Q	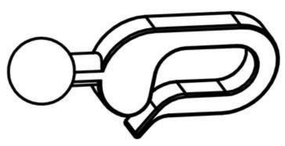	104

Item no.	Reference Image	Qty.
R	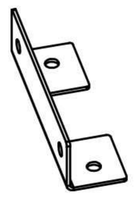	4
2		10

BOX 5 SKU: A001G078-5

Item no.	Reference Image	Qty.
D	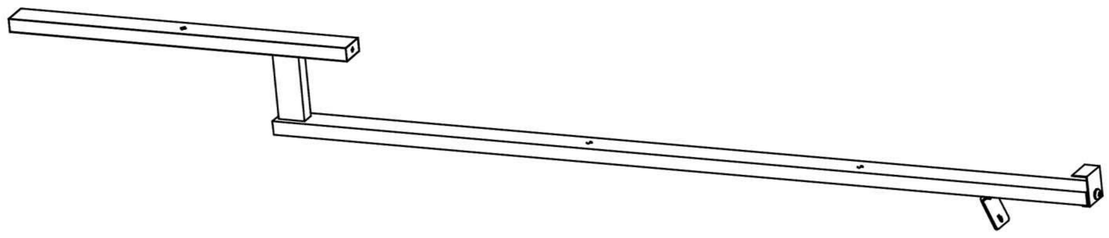 M1 X6 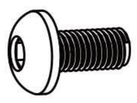 X1 X6 M6X15mm	6
D1	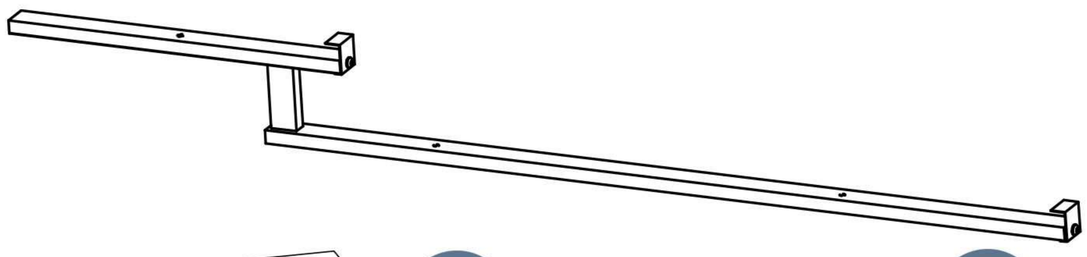 M1 X4 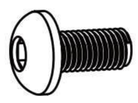 X1 X4 M6X15mm	2

Item no.	Reference Image	Qty.
G	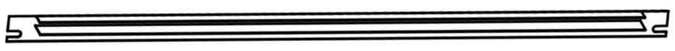	4

ACCESSORY CATALOGUE

Item no.	Reference Image	Qty.
G1	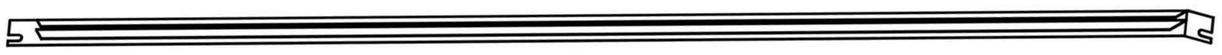	4
G2		4
G3		2
G4		2
G5		2
G6		2
G7	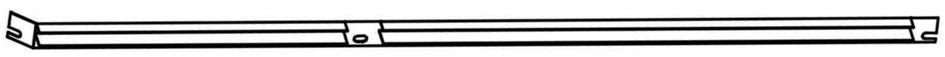	2
G8	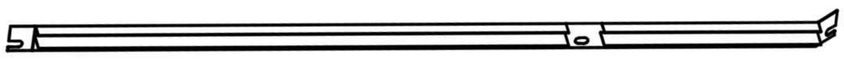	2
H1	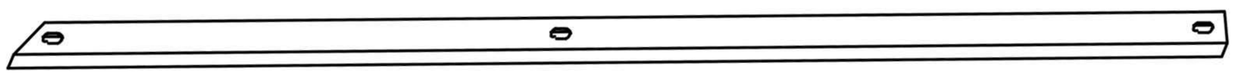	4
H2	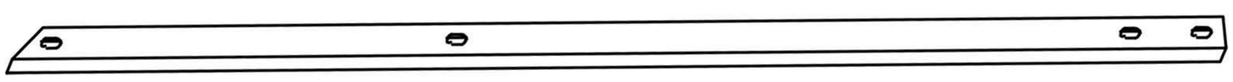	4

ACCESSORY CATALOGUE

Item no.	Reference Image	Qty.
H3	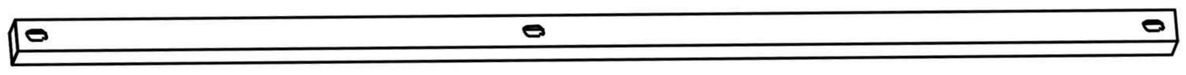	4
H6	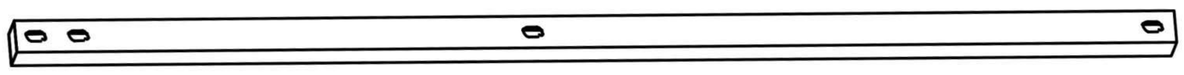	4

Item no.	Reference Image	Qty.
P	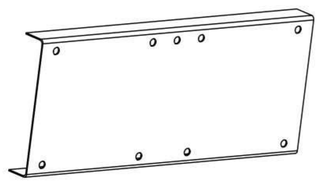	6
I	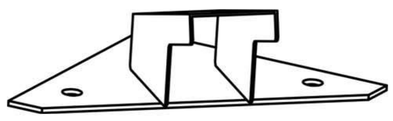	4
I1	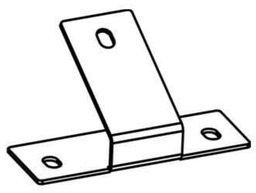	2
J1	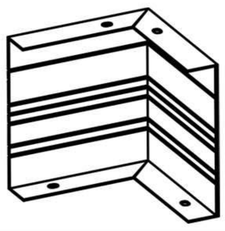	4
X1	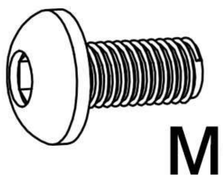 M6x15mm	195
X2	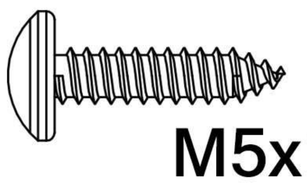 M5x15mm	40
X3	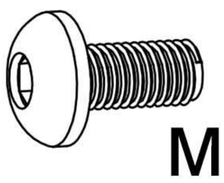 M6x20mm	4

Item no.	Reference Image	Qty.
X4	M6x20mm	32
X5	M6x42mm	28
X6	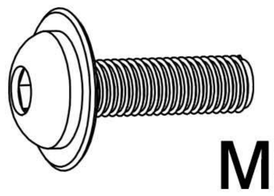 M6x30mm	4
X7	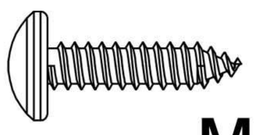 M4x25mm	28
X8	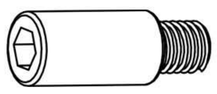 M6x10mm	32
X9	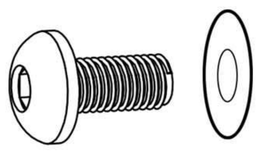 M6x30mm	16
3	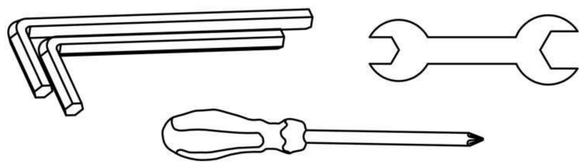	1

BOX 6 SKU: A001G078-6

Item no.	Reference Image	Qty.
N		2
N1	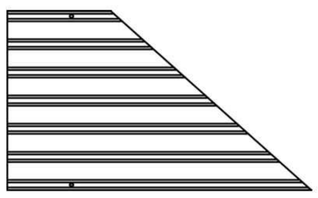	2
N2	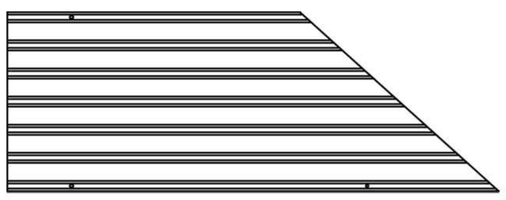	2
N3	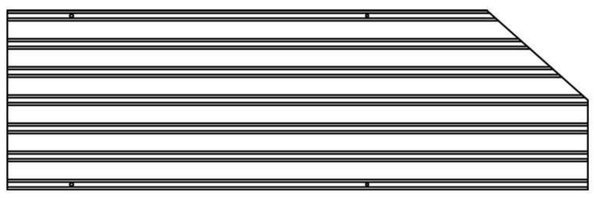	2
N4		2
N5		2
N6	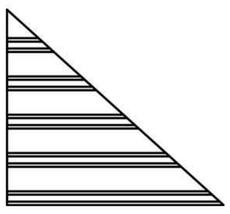	2

Item no.	Reference Image	Qty.
N7	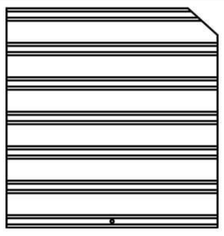	2
N8	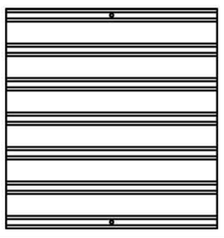	4
O1	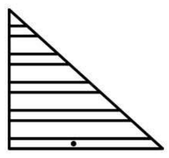	2
O2	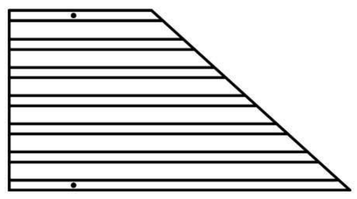	2
O3	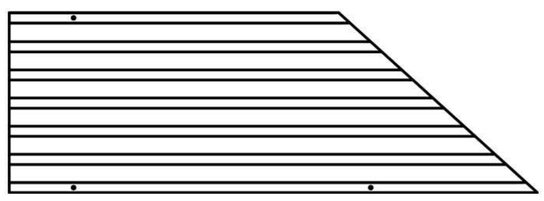	2
O4	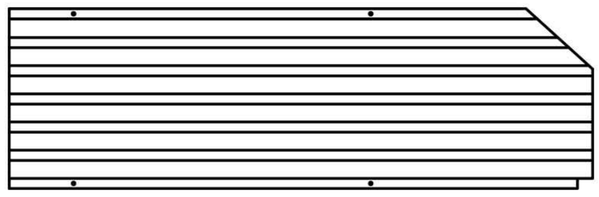	2
O5	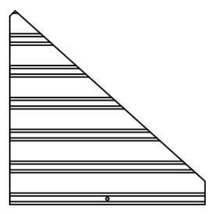	2

Please take care of the screws and contact the after-sales service if there is any problem with the installation or parts.

E-mail: cs.helper01@gmail.com

BOX 7 SKU: A001G078-7

Item no.	Reference Image	Qty.
Y7	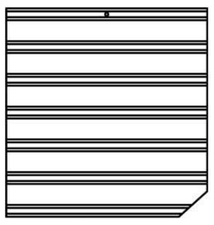	2
Y6	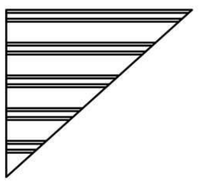	2
Y5	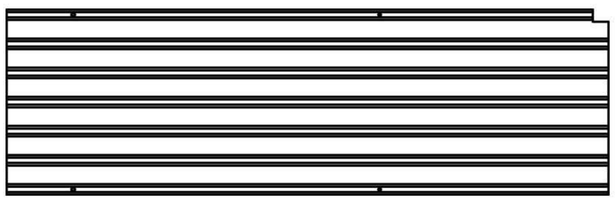	2
Y4		2
Y3	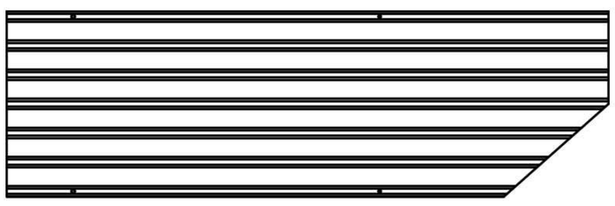	2
Y2	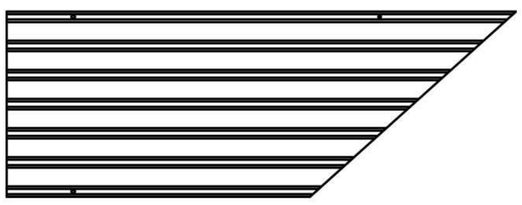	2
Y1	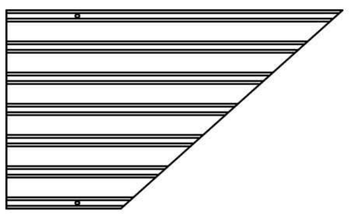	2
Y	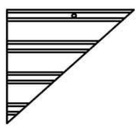	2

Item no.	Reference Image	Qty.
V5	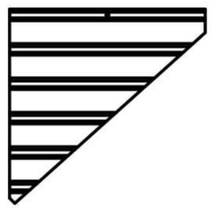	2
V4	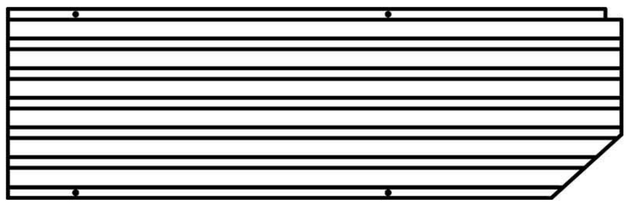	2
V3	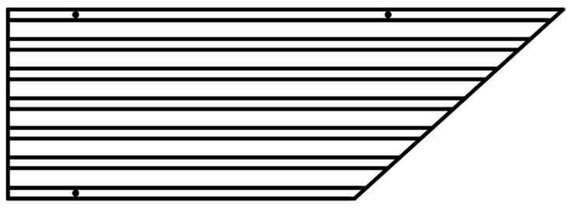	2
V2	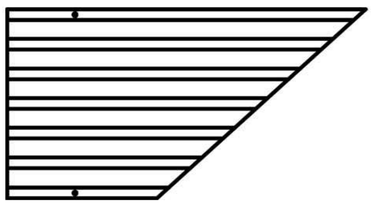	2
V1	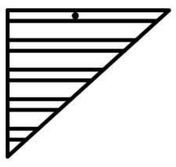	2

STEP1

Parts required

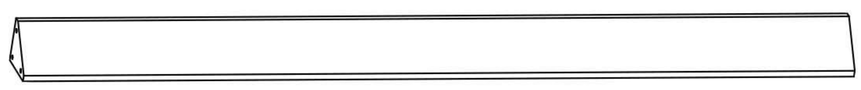

A 4pcs

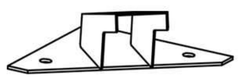

I 4pcs

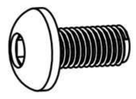

X1 12pcs

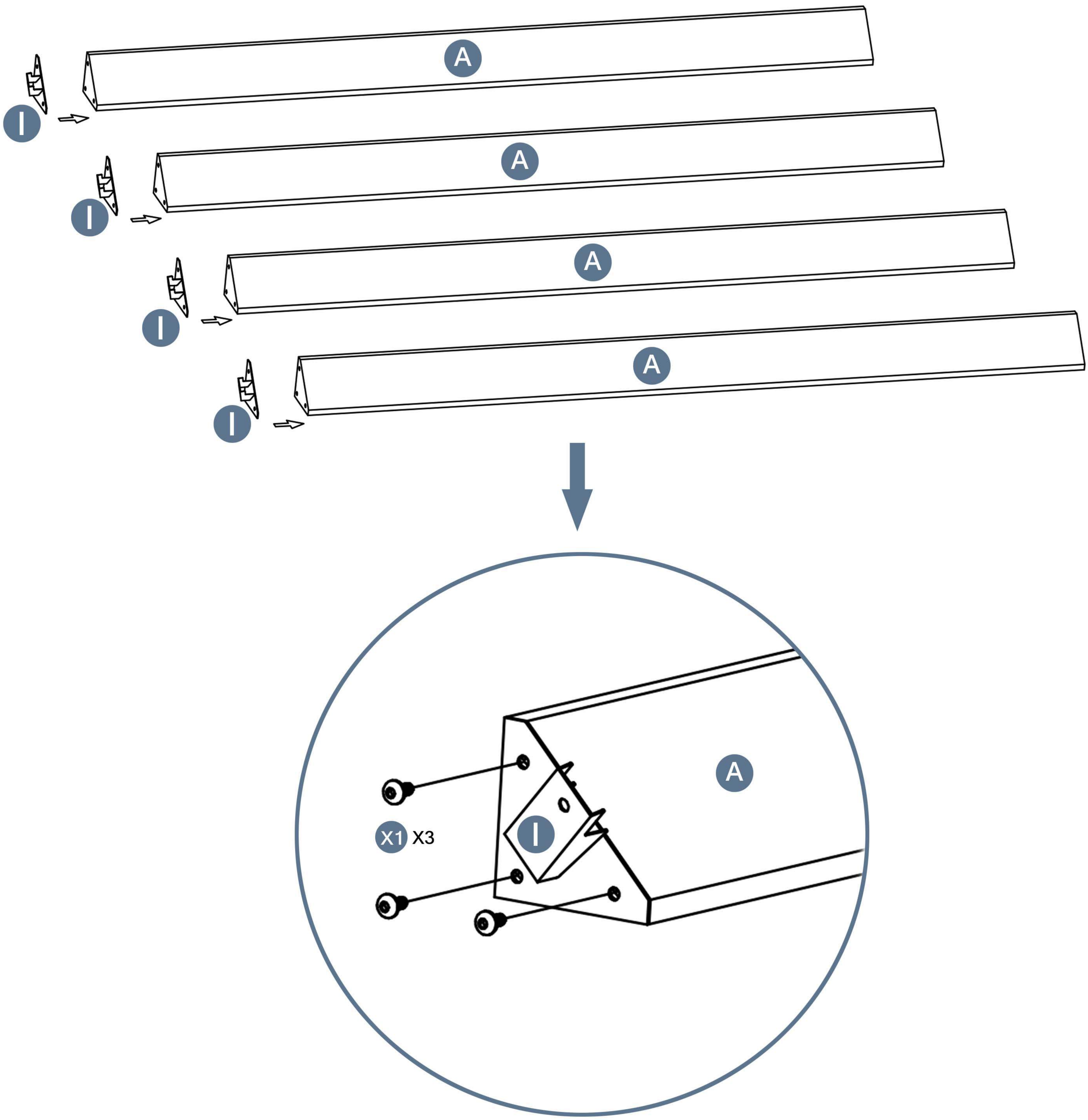

Please take care of the screws and contact the after-sales service if there is any problem with the installation or parts.

E-mail: cs.helper01@gmail.com

For ease of installation,
it is recommended to lay out the accessories in advance.

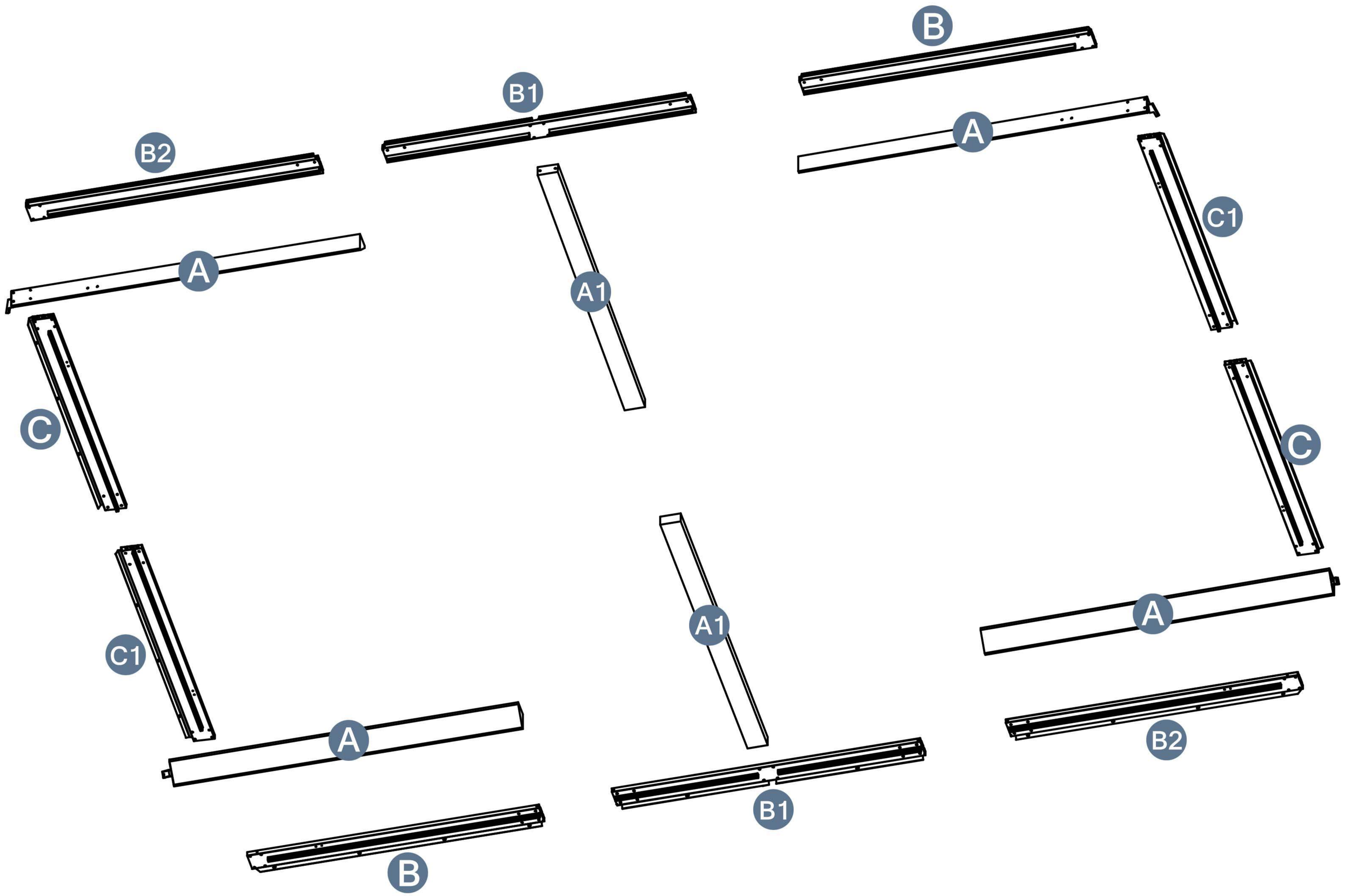

Please take care of the screws and contact the after-sales service if there is any problem with the installation or parts.
E-mail: cs.helper01@gmail.com

STEP2

Parts required

C 2pcs

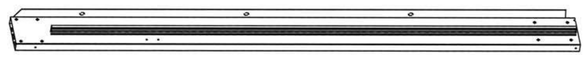

C1 2pcs

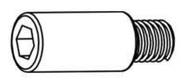

X8 16pcs

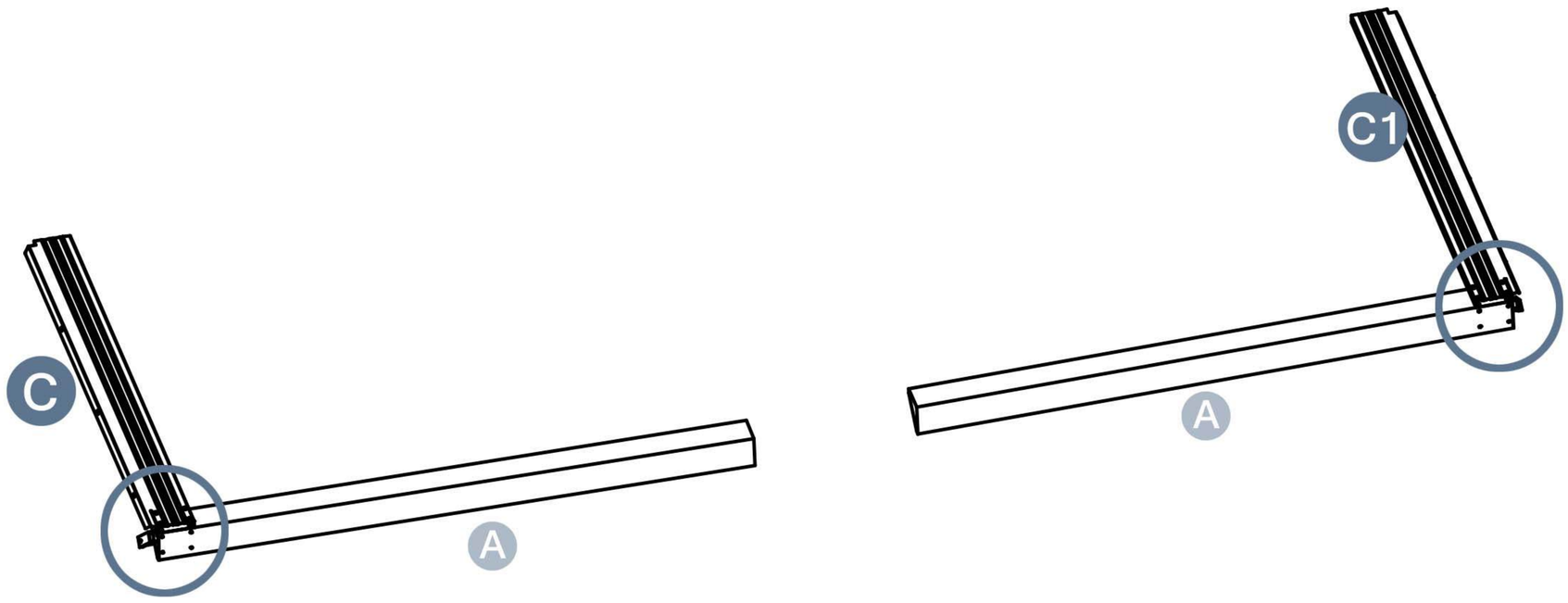

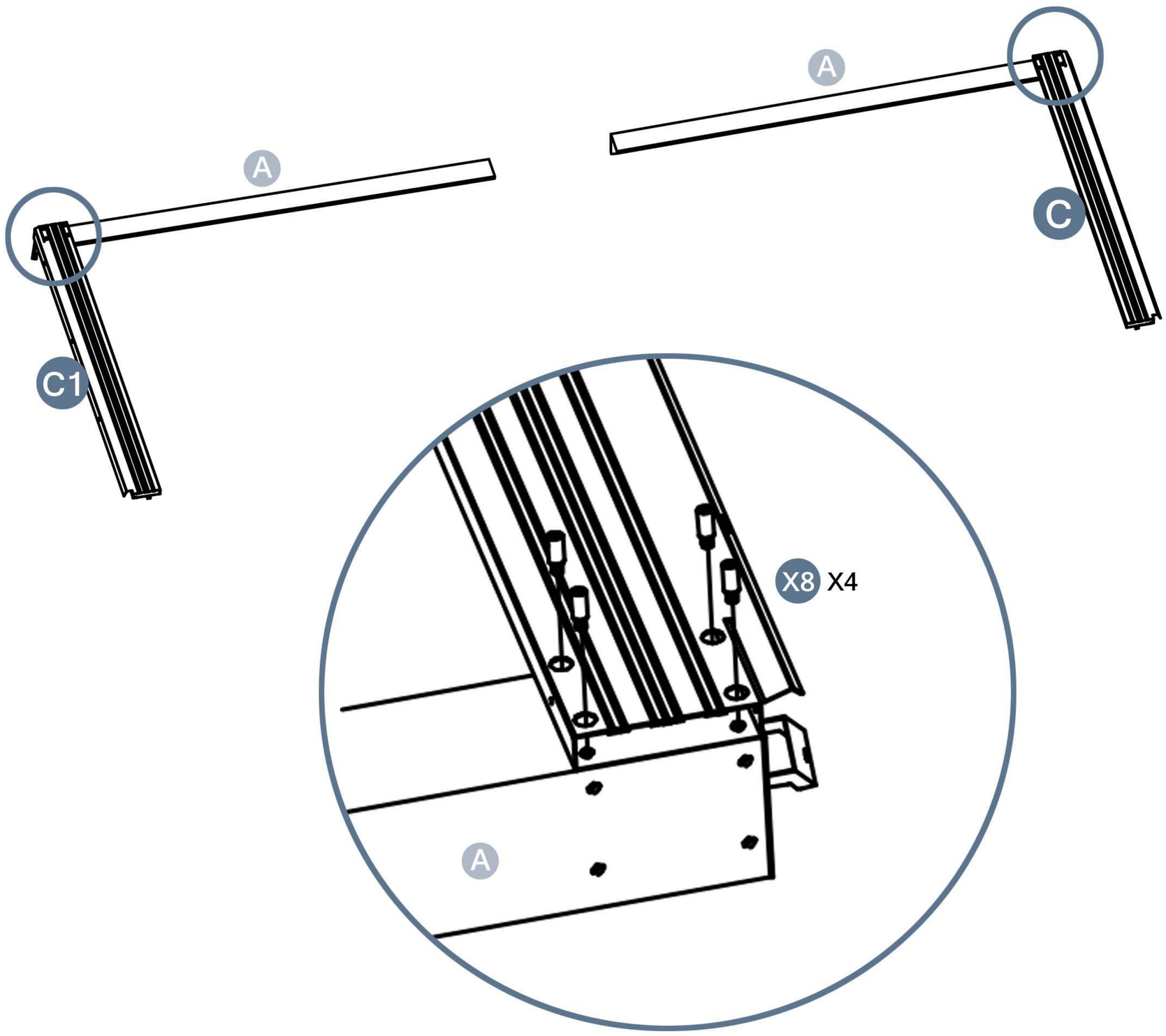

STEP3

Parts required

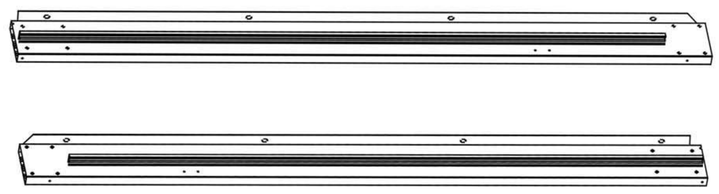

B 2pcs

B2 2pcs

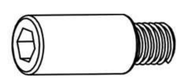

X8 16pcs

Rotate it over and install the other side.

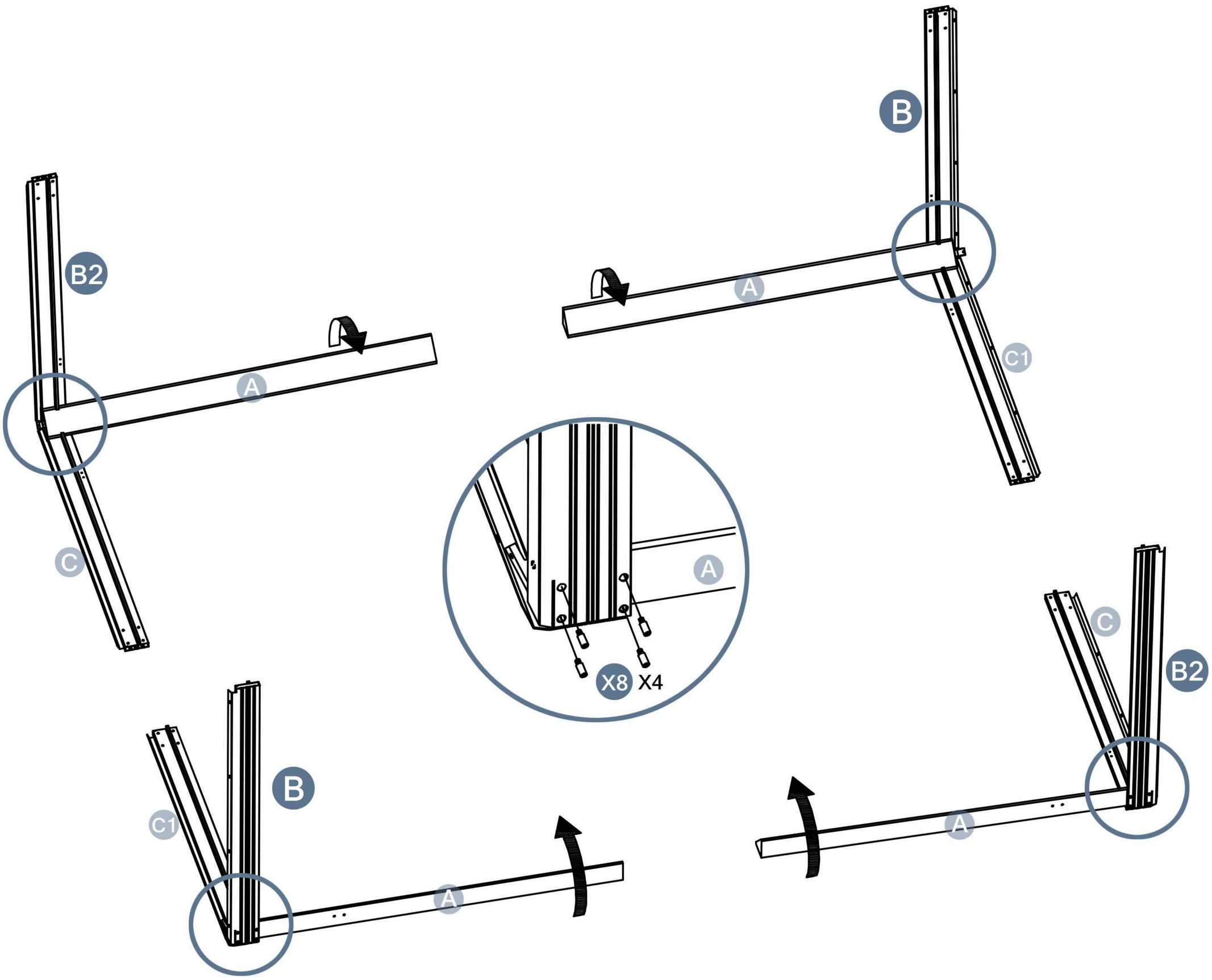

STEP4

Parts required

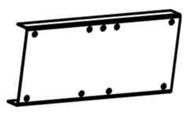

P 2pcs

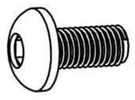

X1 16pcs

1 → 2

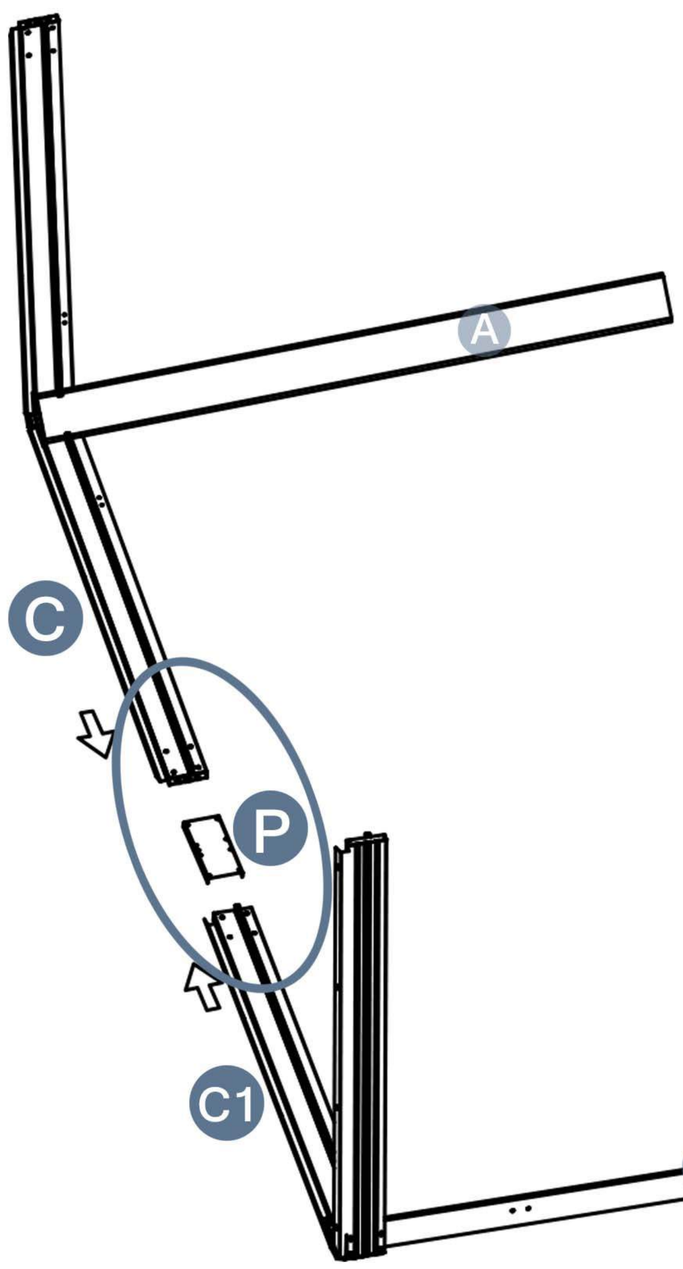

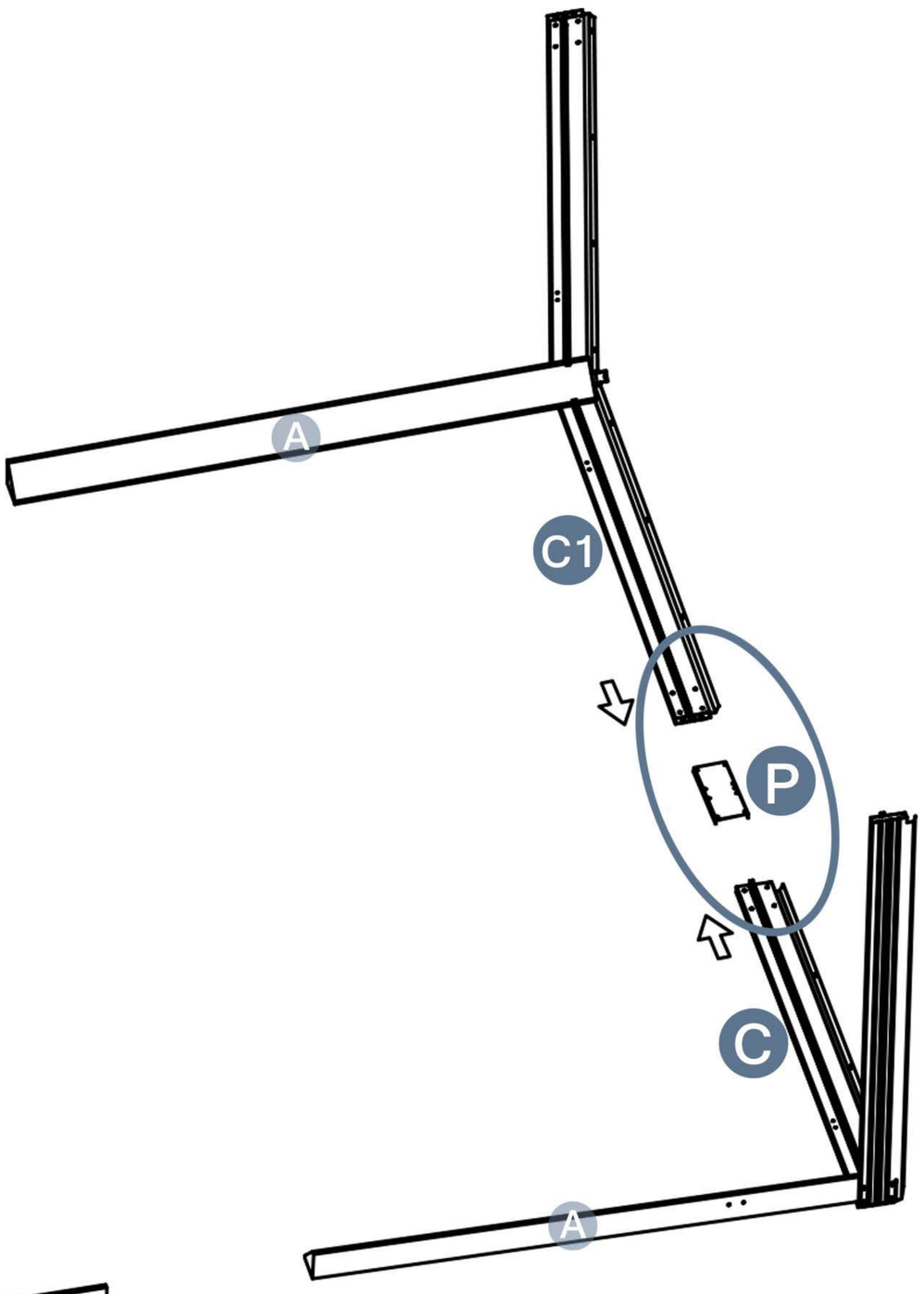

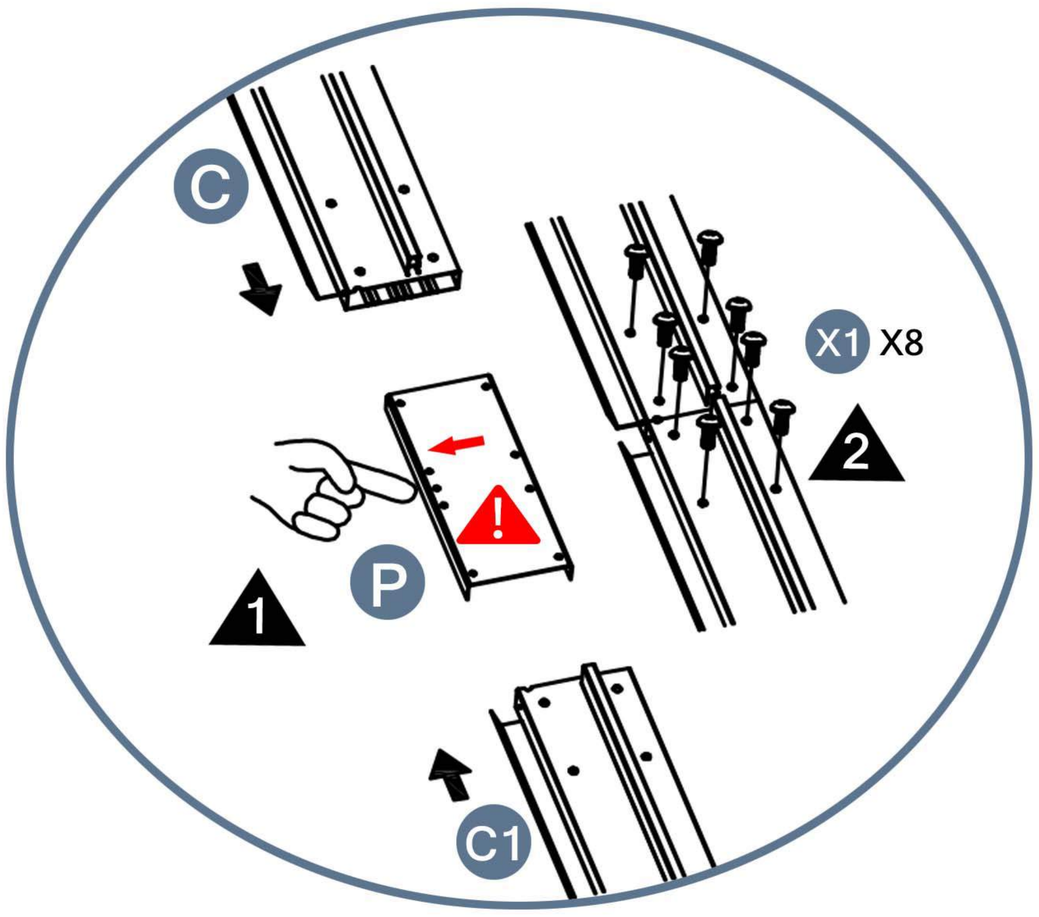

Note, the three holes on top of P should face upwards, please do not install it incorrectly.

STEP5

Parts required

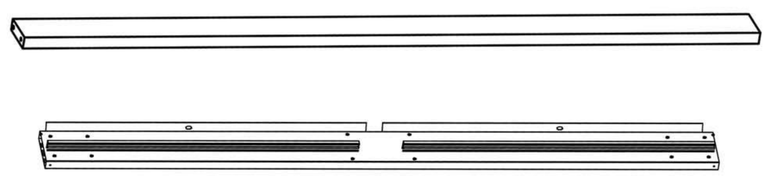

A1 2pcs

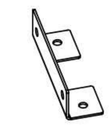

R 4pcs

B1 2pcs

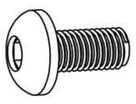

X1 16pcs

1 → 2

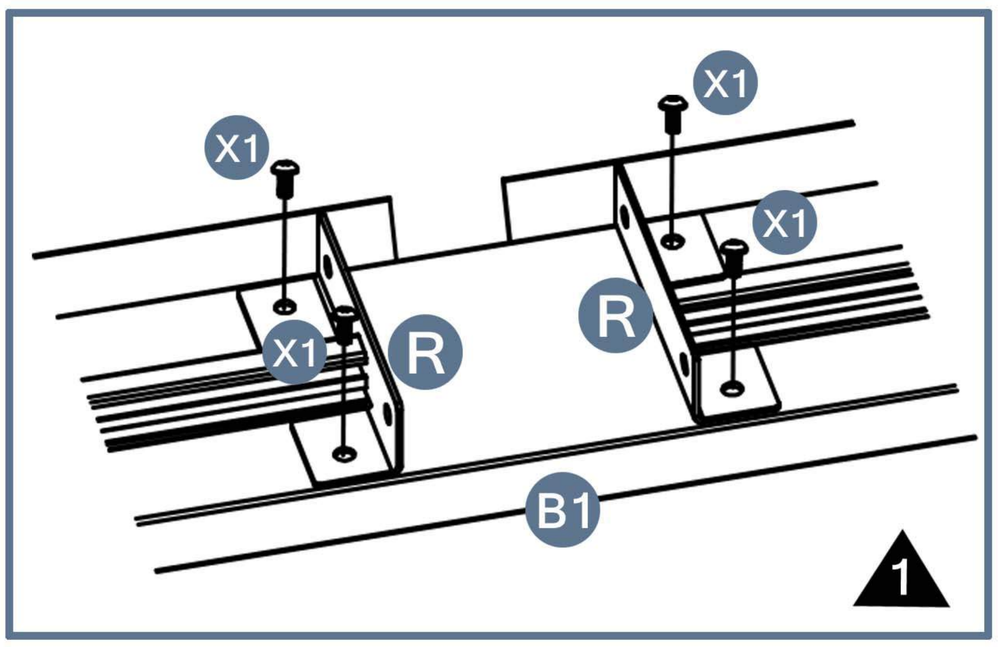

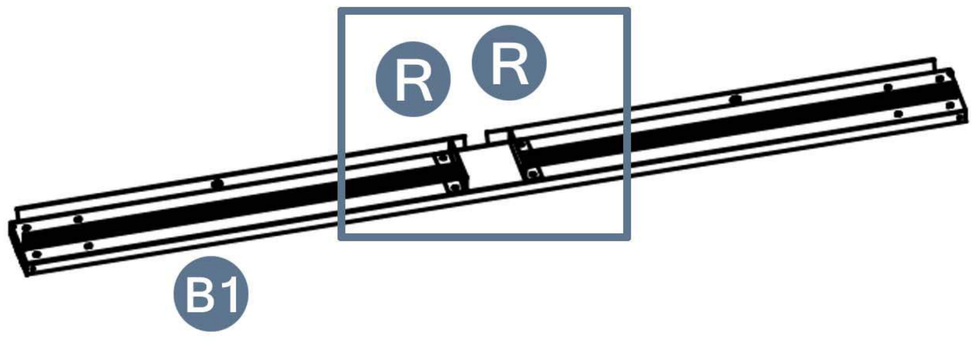

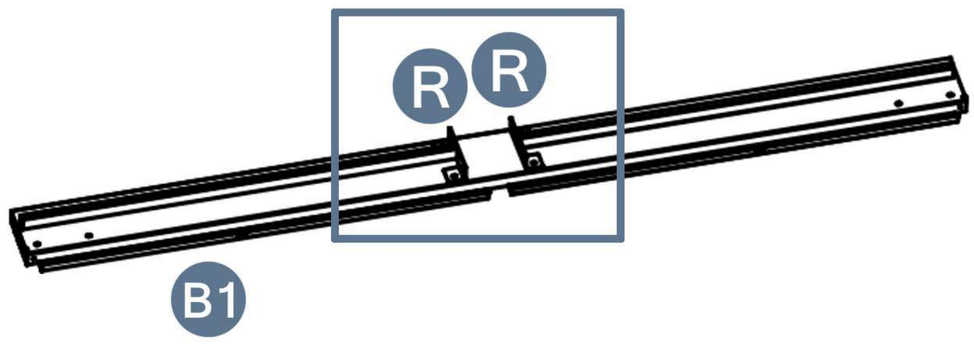

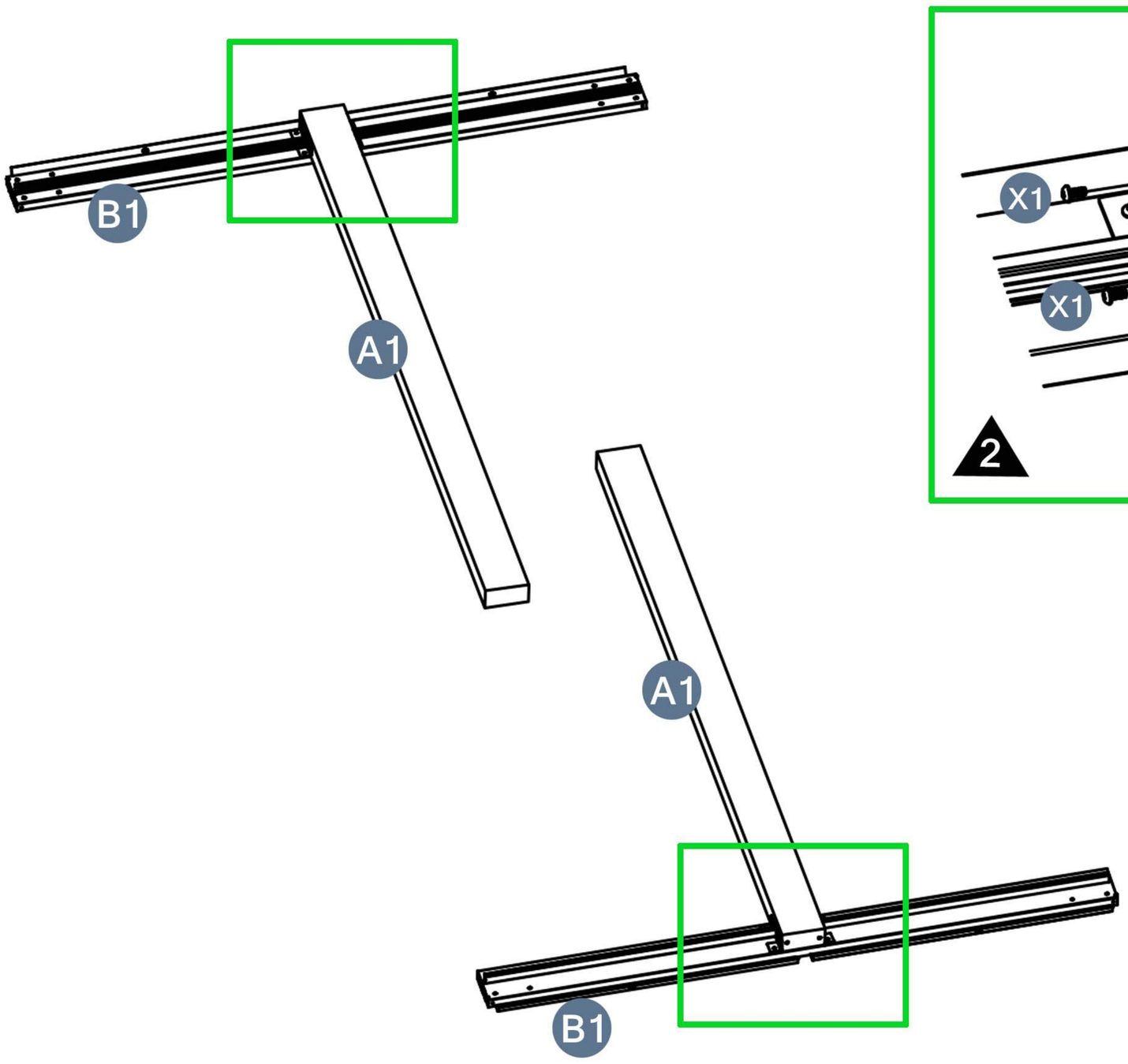

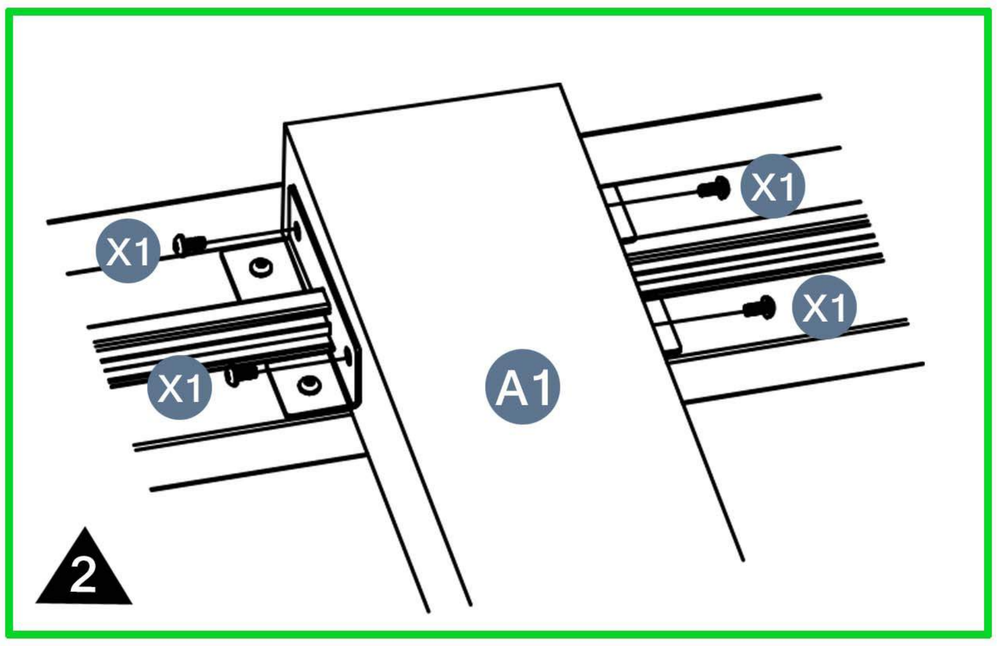

STEP6

Parts required

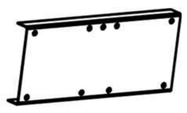

P 4pcs

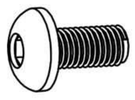

X1 16pcs

To avoid issues during later installation,
please check again whether the three holes on P are correctly facing upward.

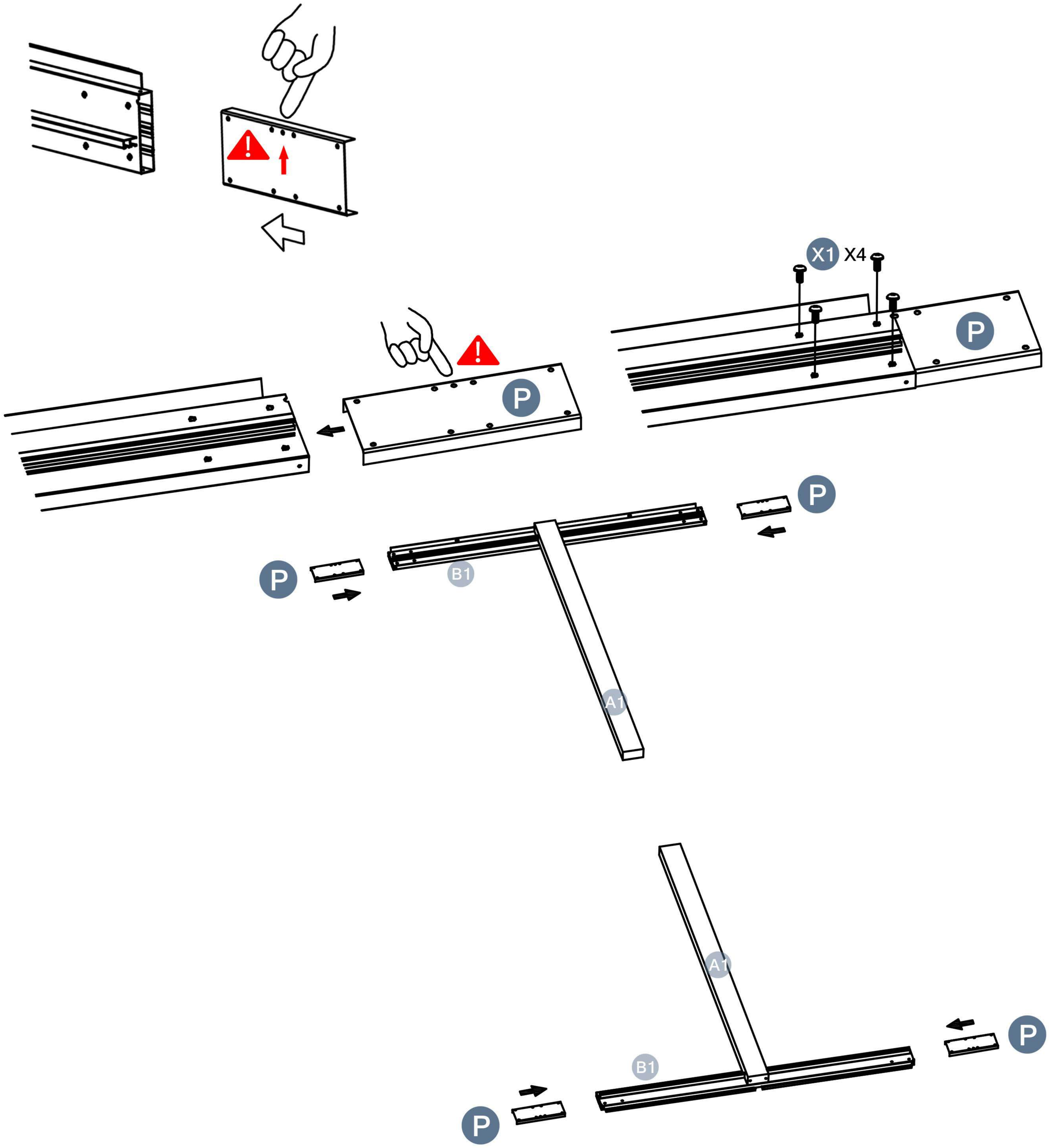

STEP7

Parts required

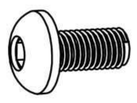

X1 8pcs

Combination

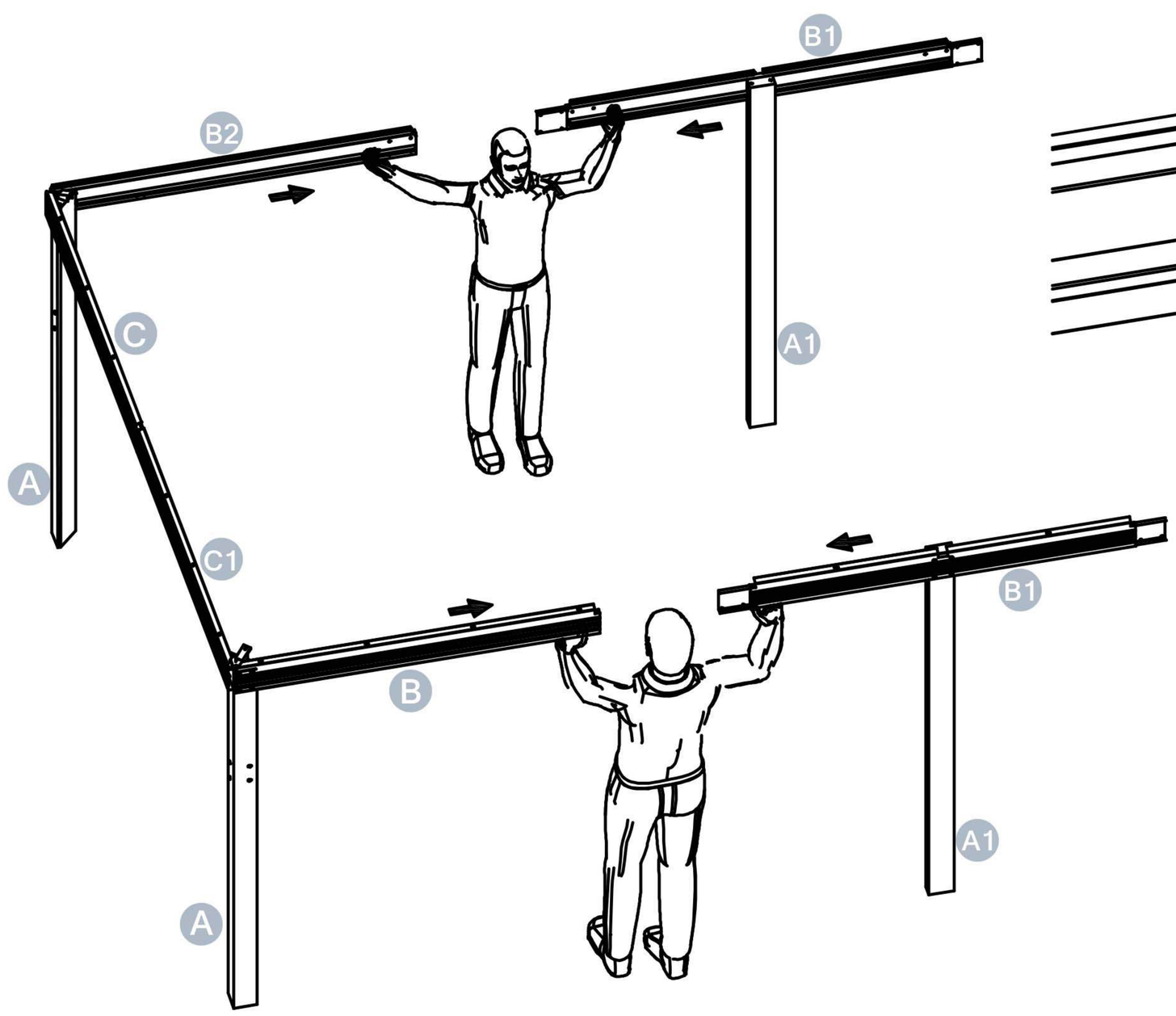

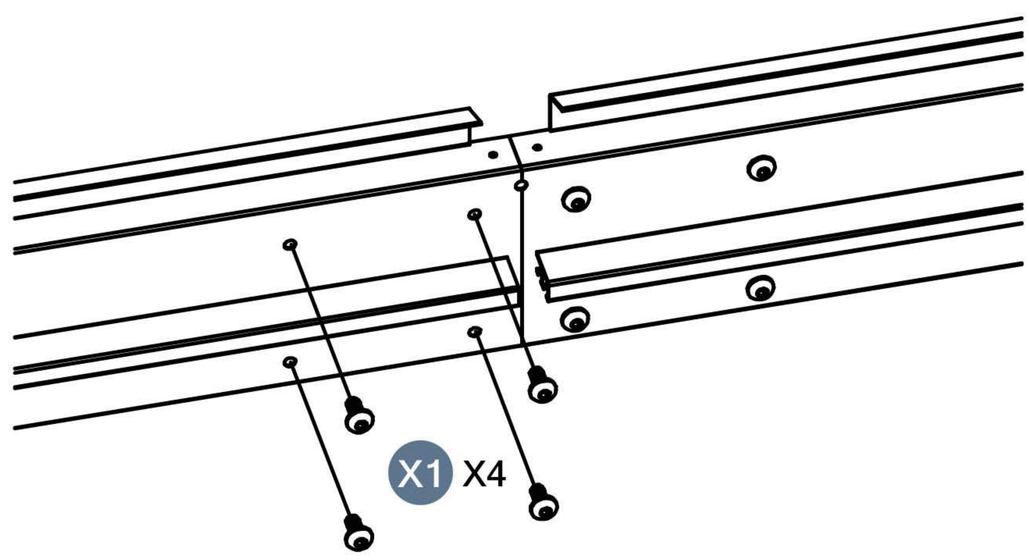

STEP8

Parts required

X1 8pcs

Combination

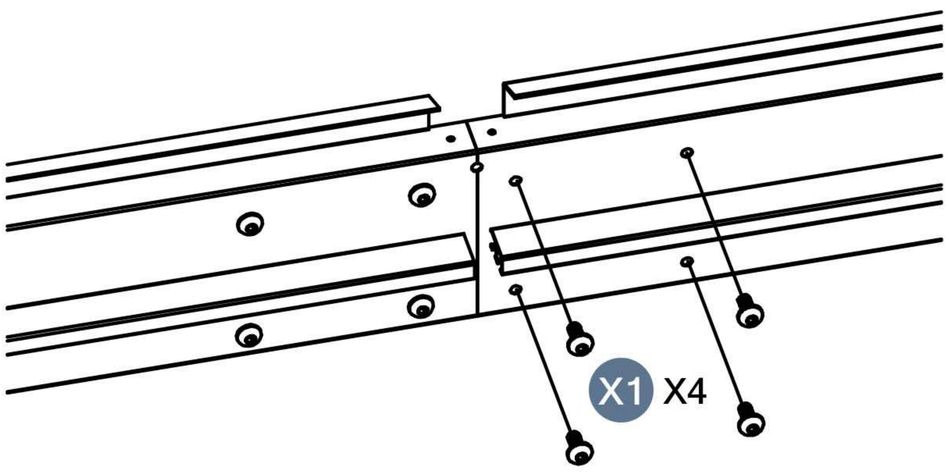

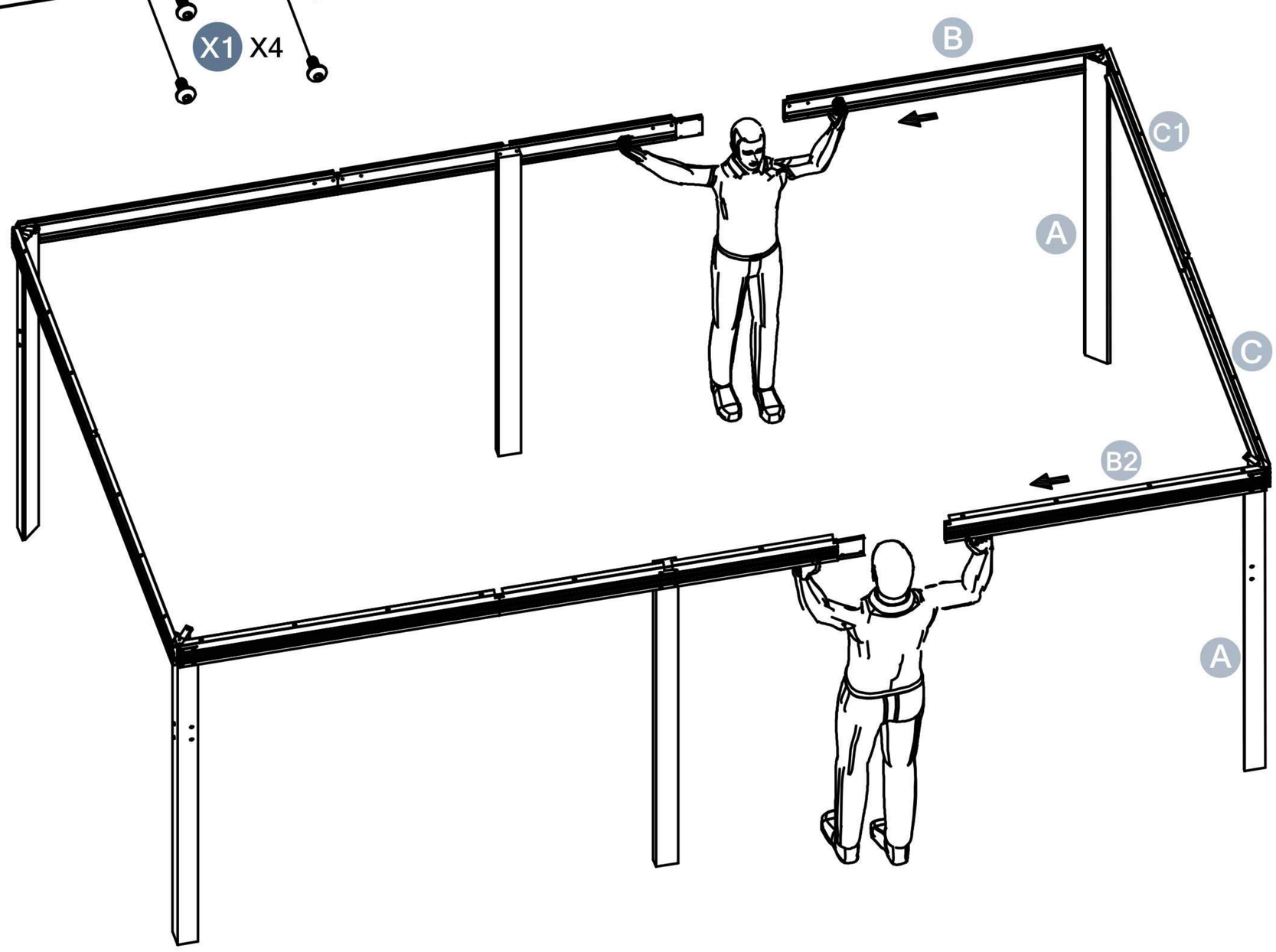

STEP9

Parts required

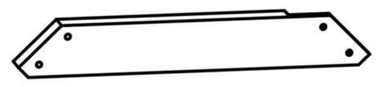
F 4pcs

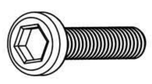
X 16pcs

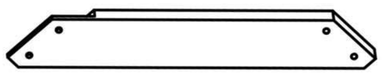
F1 4pcs

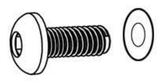
X9 16pcs

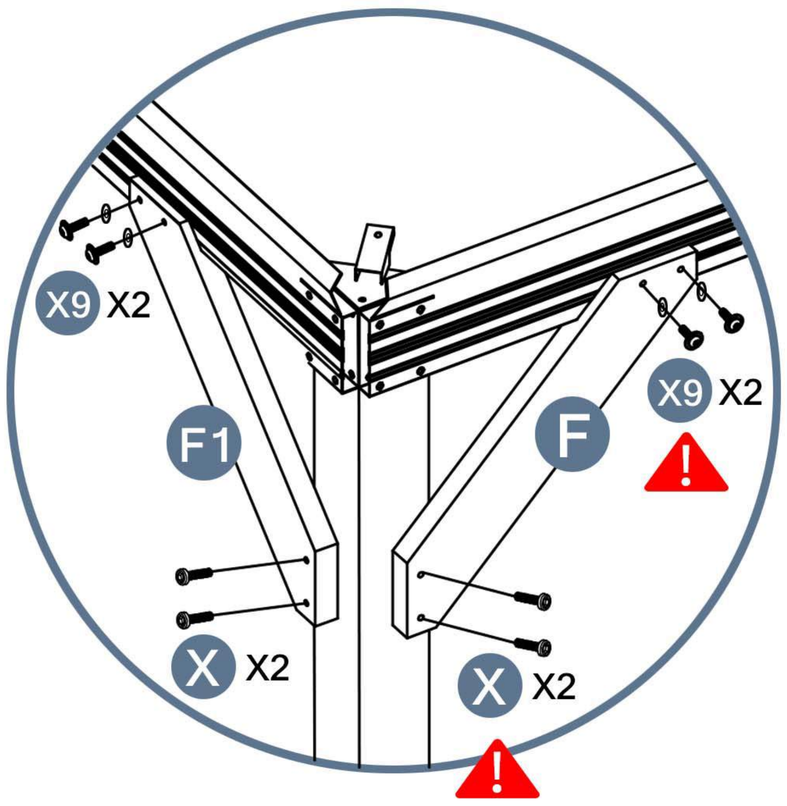

Pay attention to the different screws

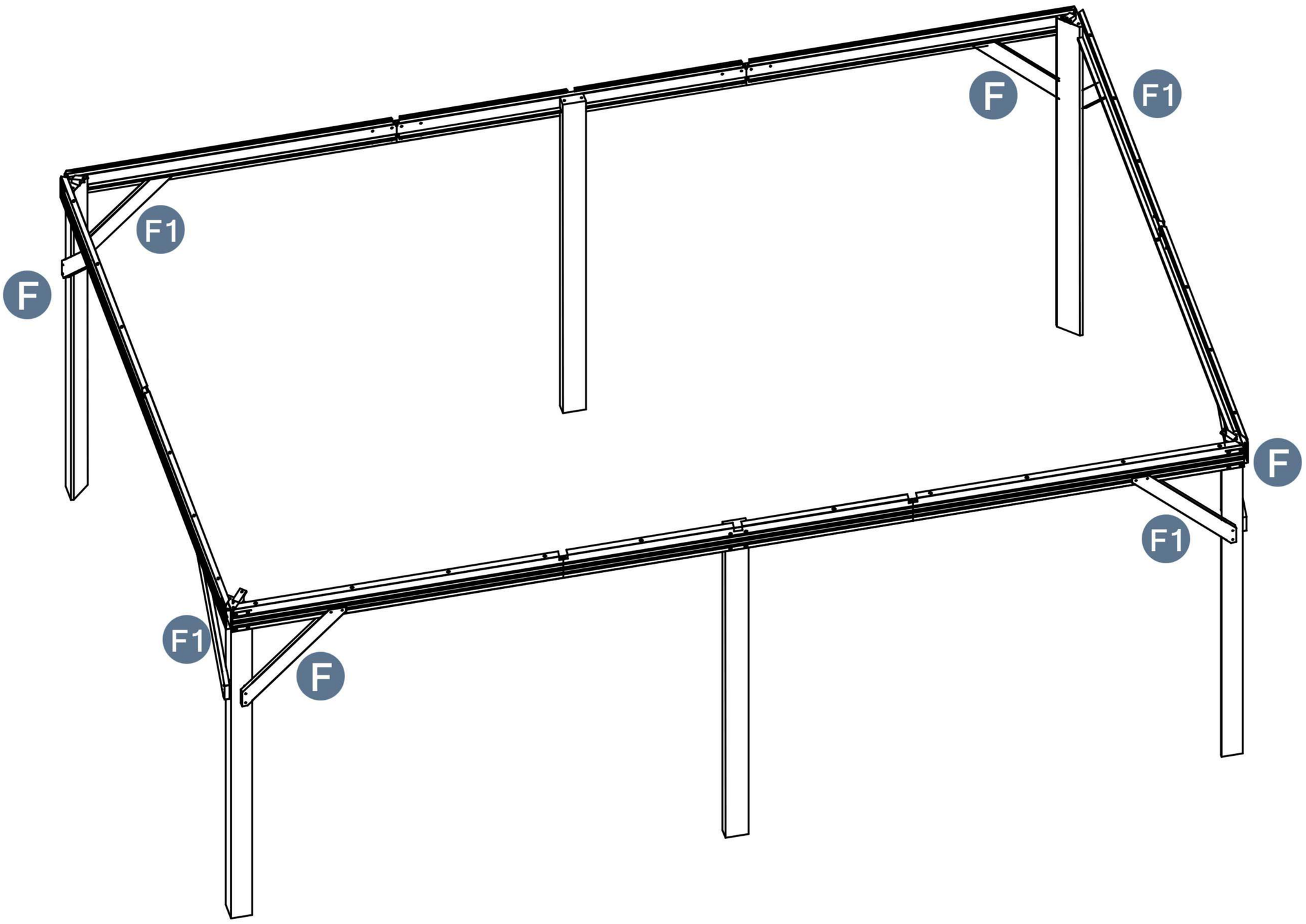

STEP10

Parts required

J1 4pcs

X2 16pcs

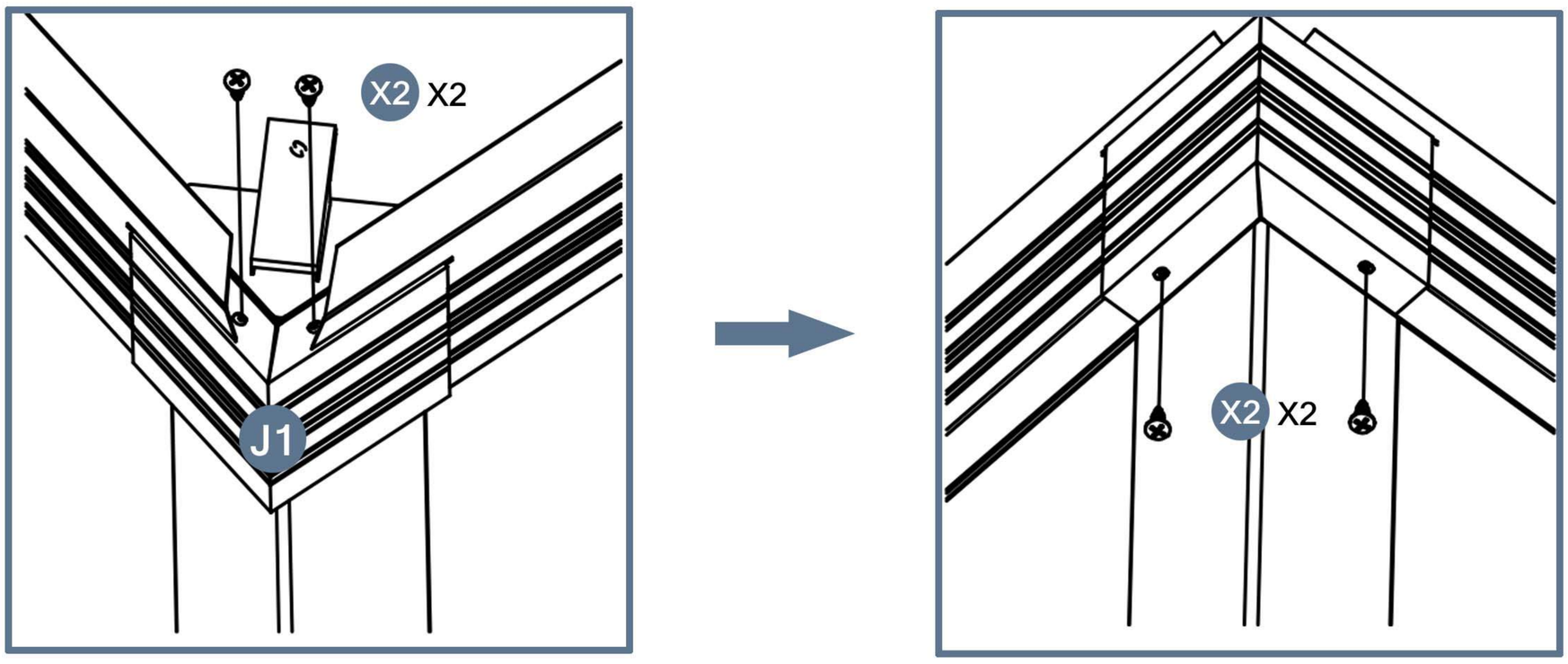

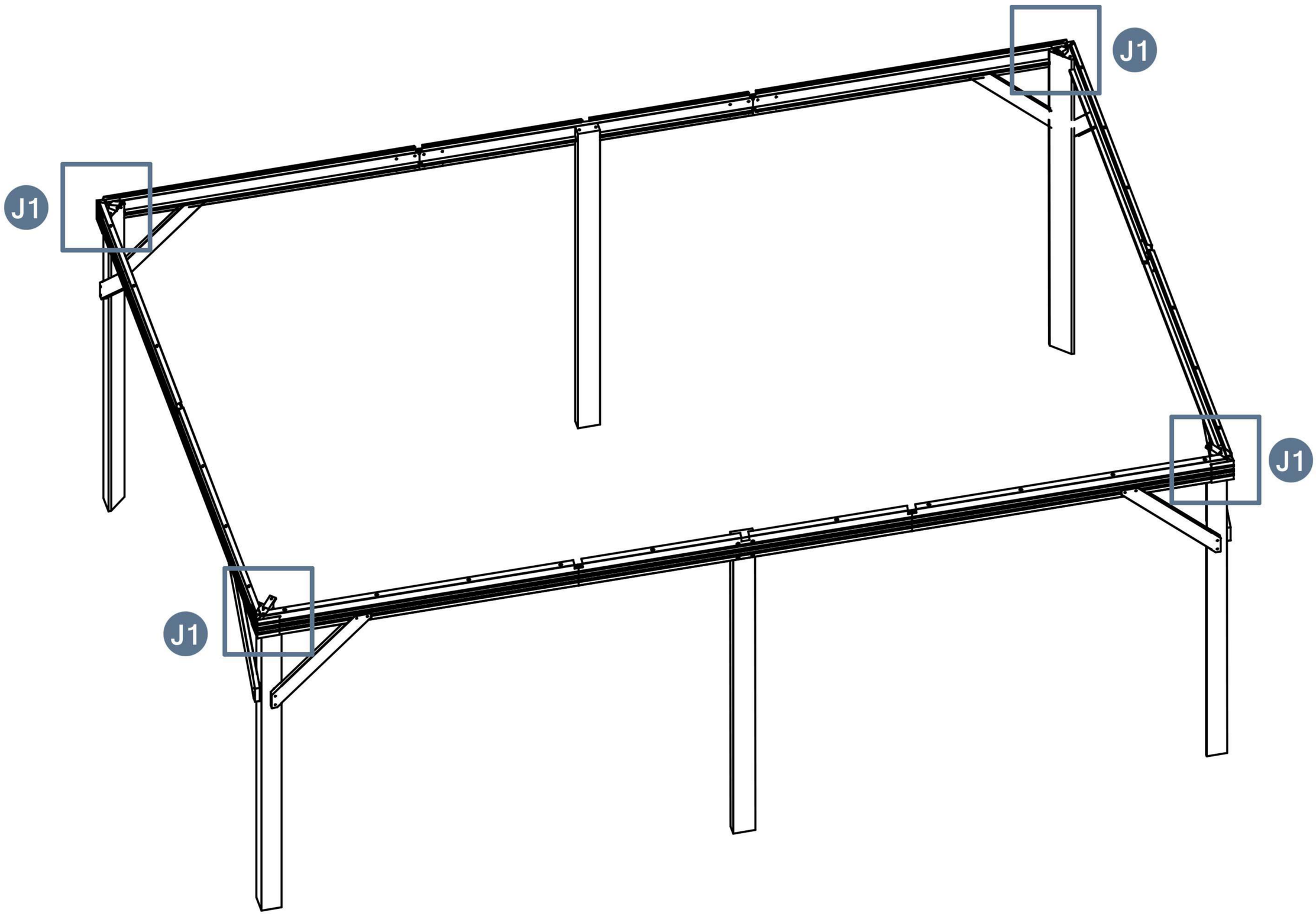

STEP11

Parts required

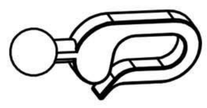

Q 104pcs

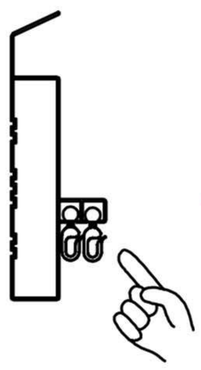

Pay attention to the different number of hooks.

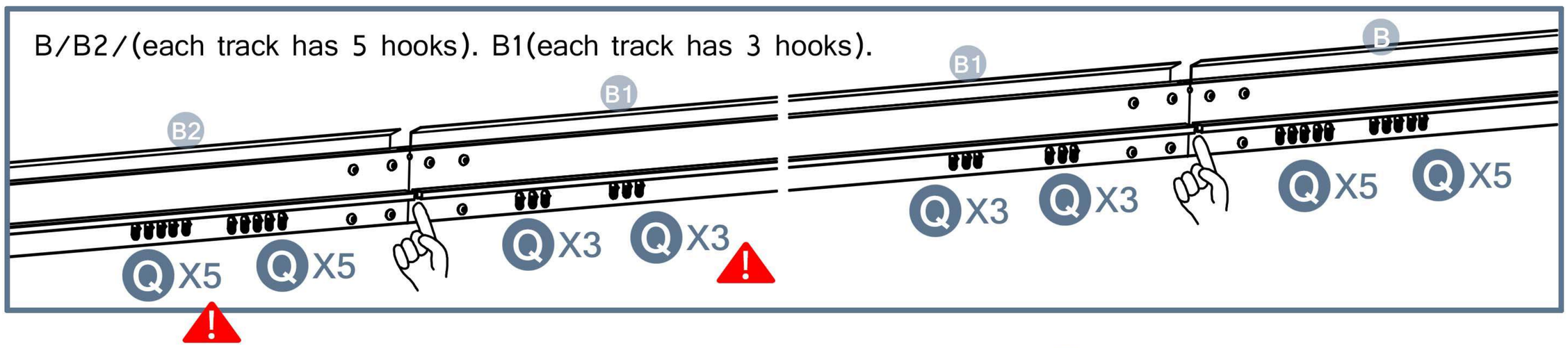

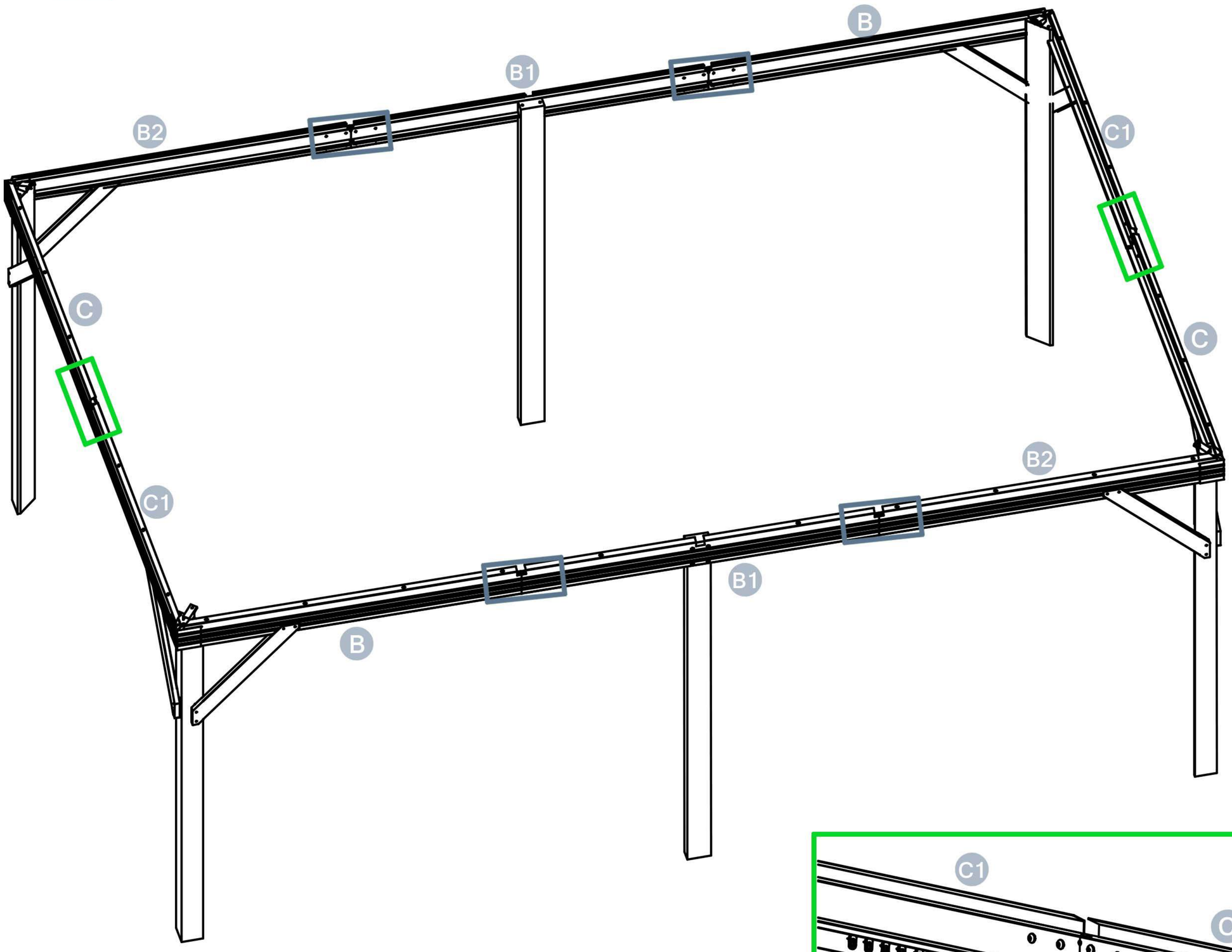

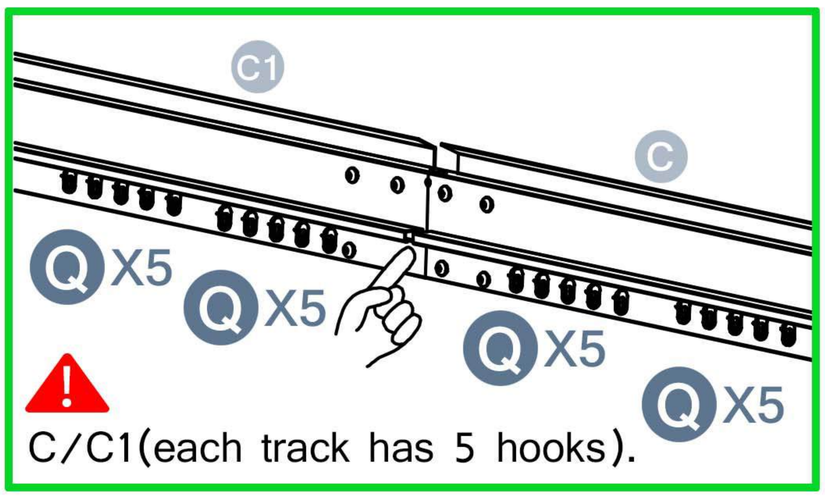

STEP12

Parts required

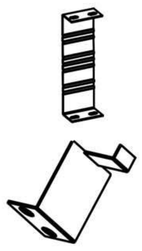

J2 6pcs

X2 24pcs

M6 6pcs

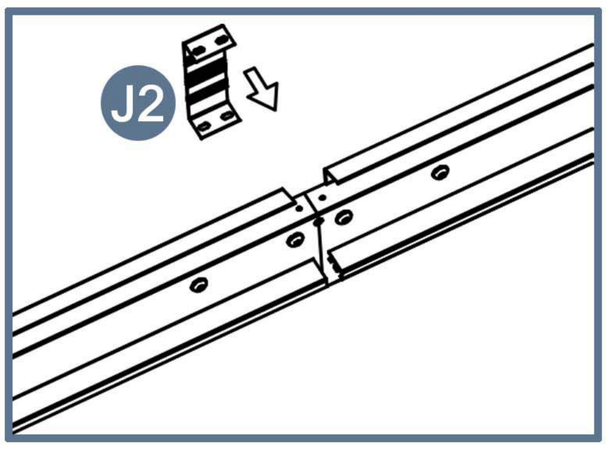

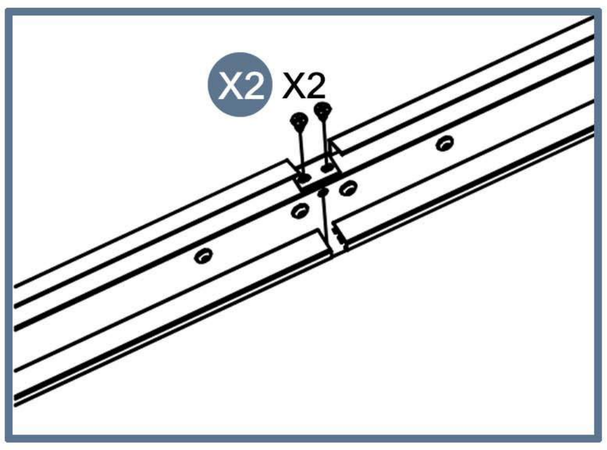

1

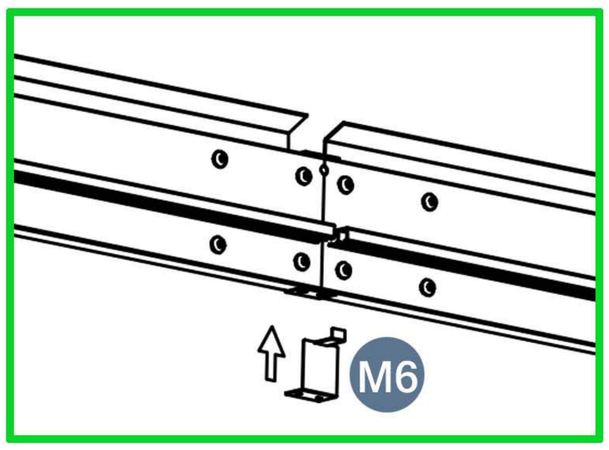

2

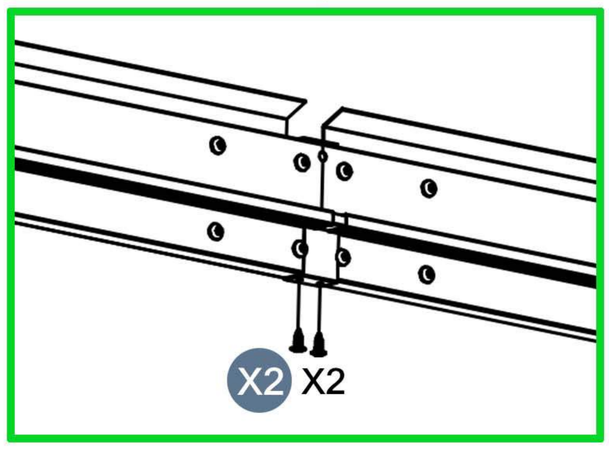

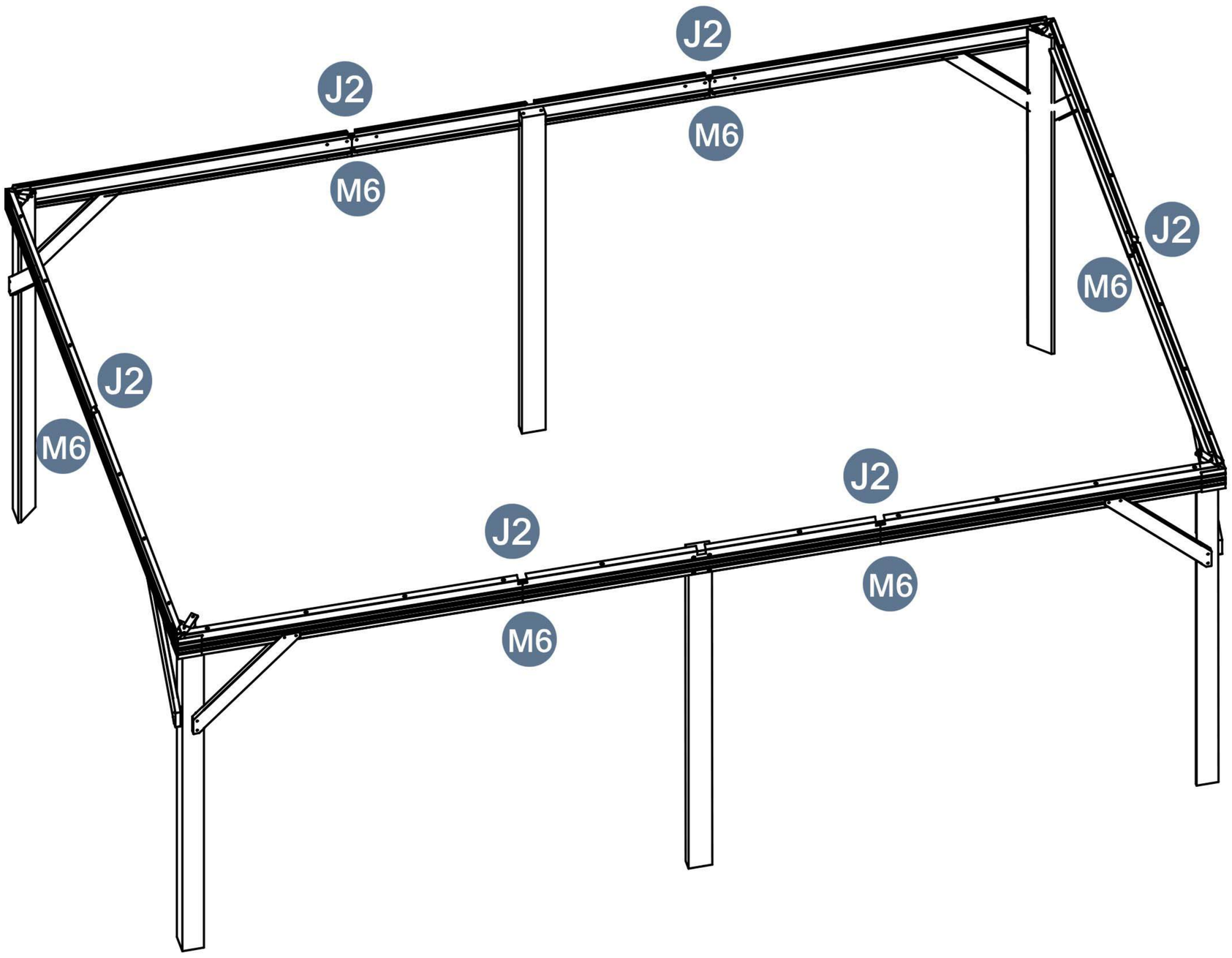

STEP13

Parts required

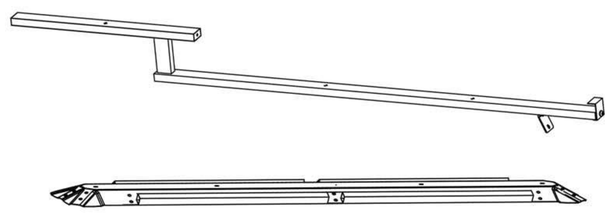

D 4pcs

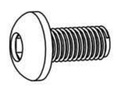

X1 8pcs

K1 4pcs

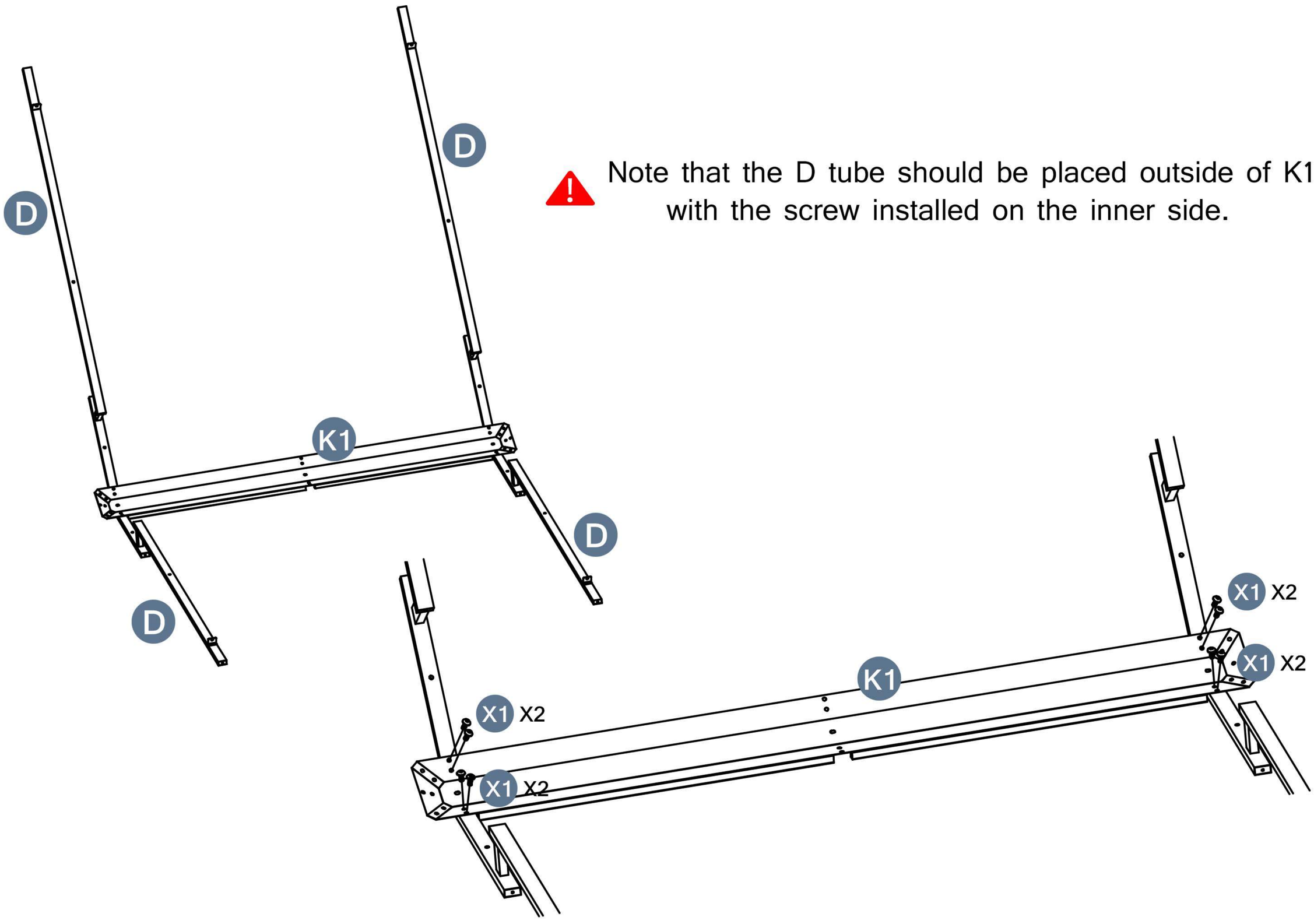

Note that the D tube should be placed outside of K1, with the screw installed on the inner side.

STEP14

Parts required

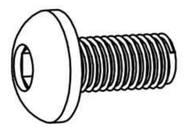

X1 4pcs

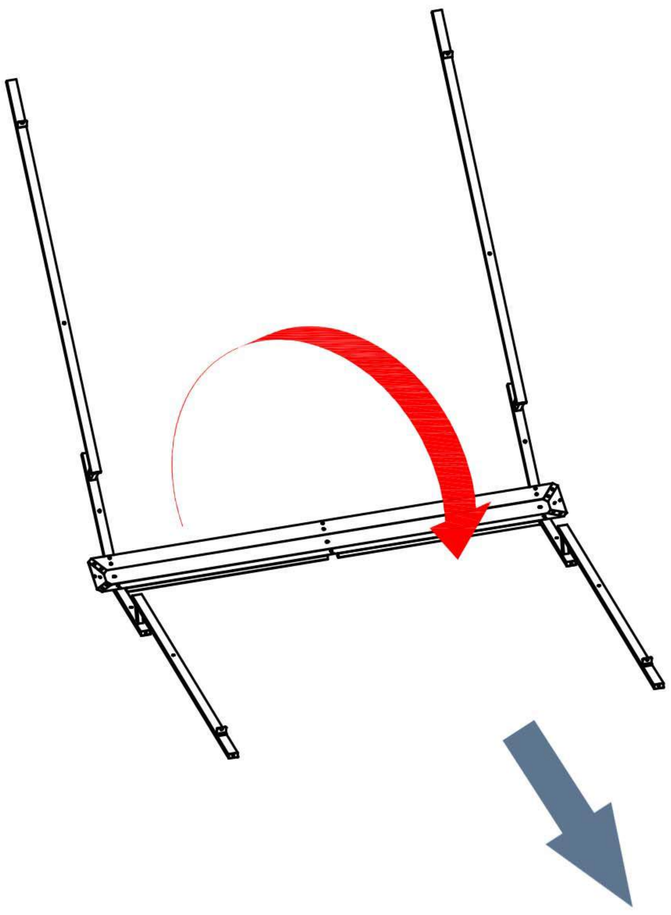

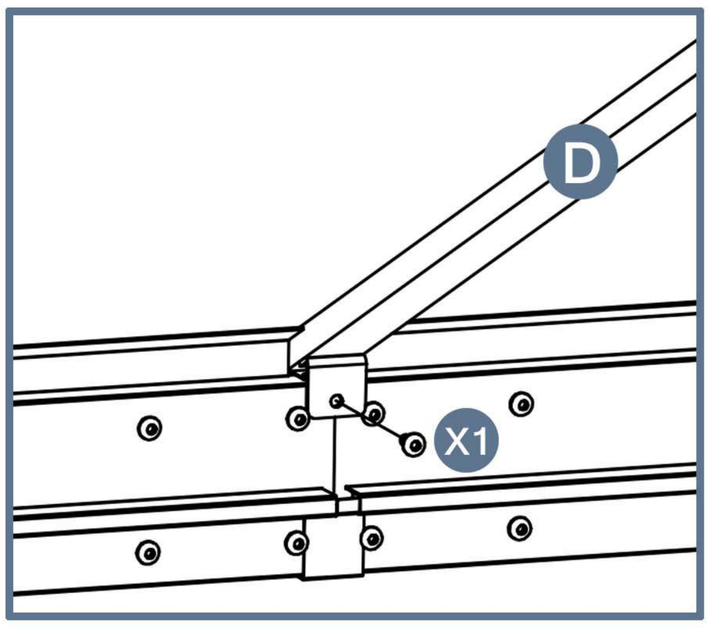

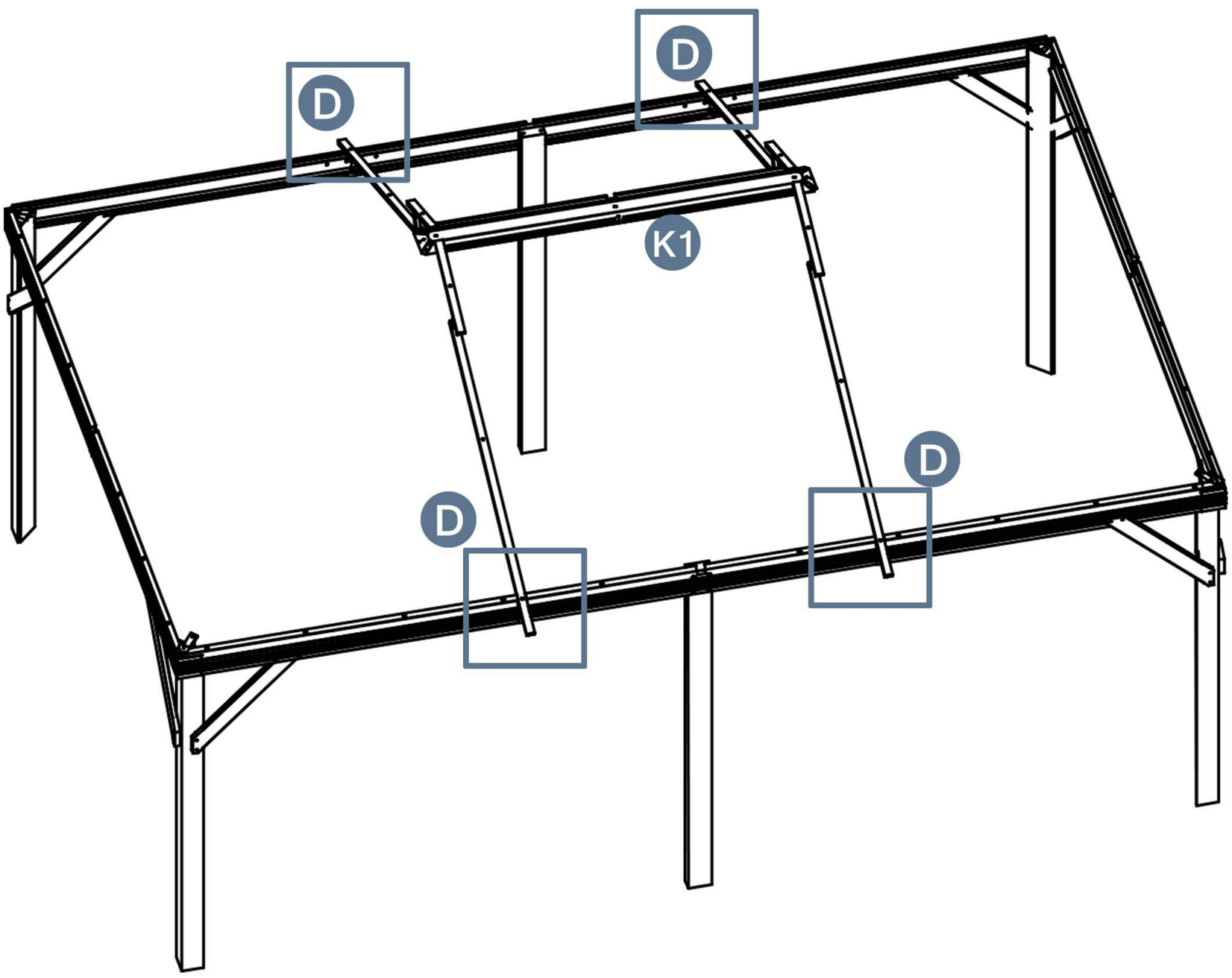

STEP15

Parts required

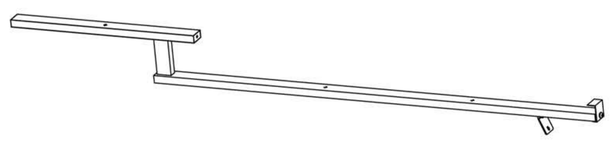

D 2pcs

X1 6pcs

1 → 2

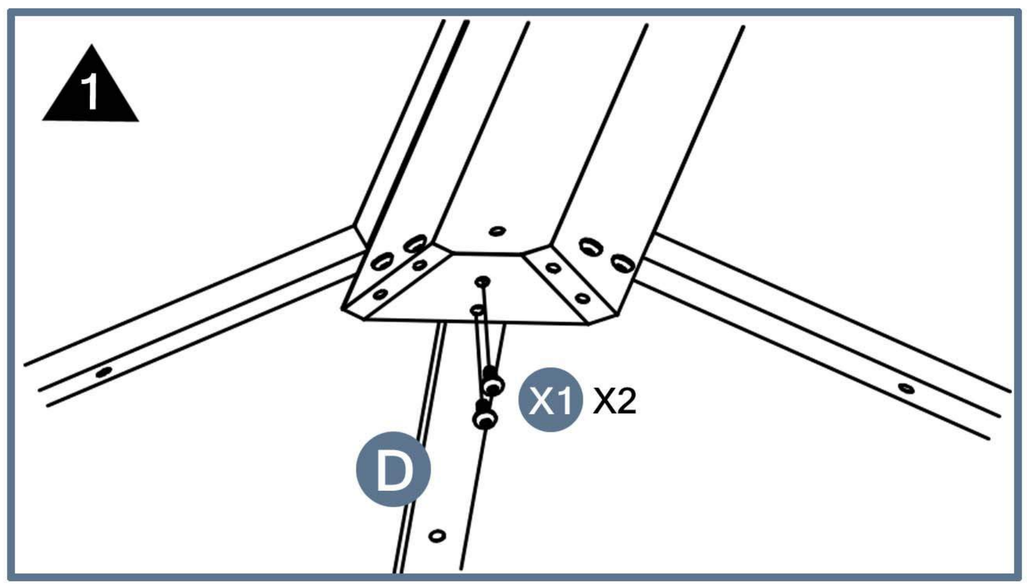

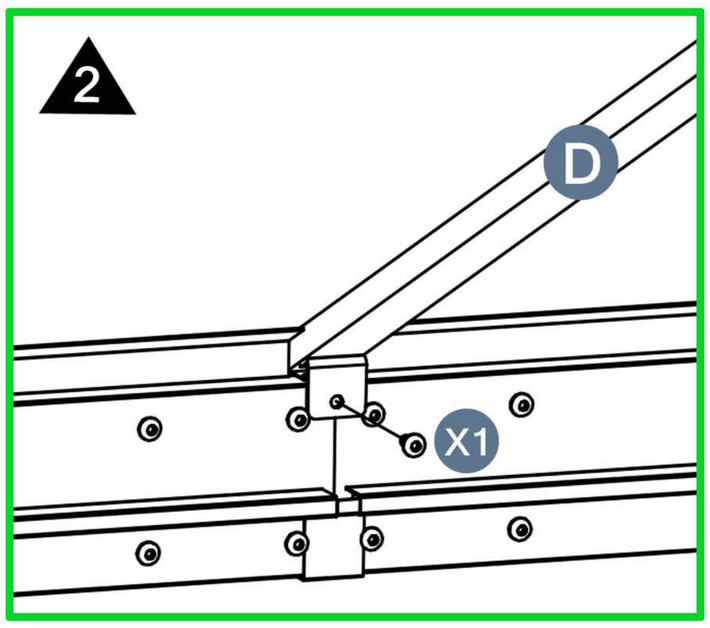

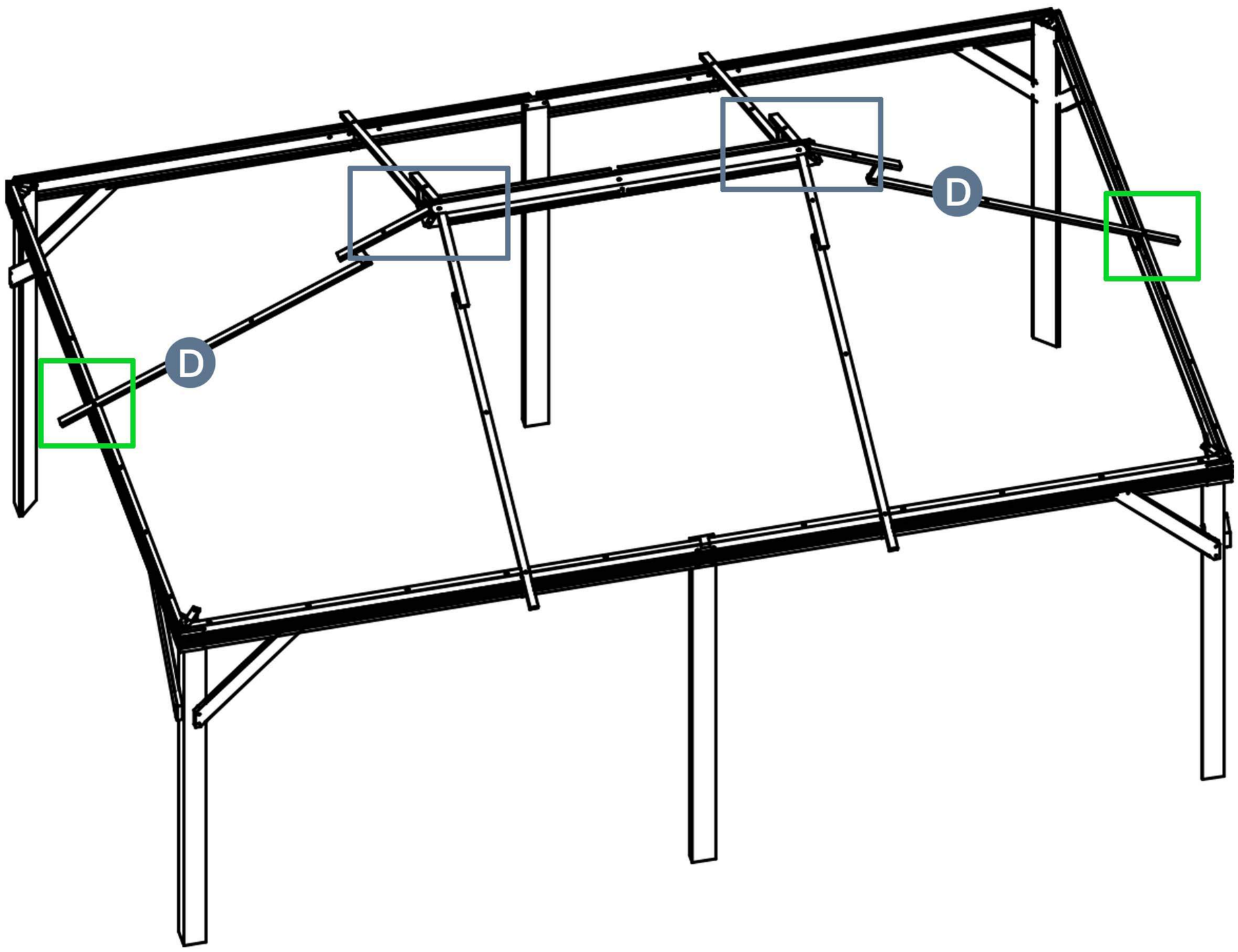

STEP16

Parts required

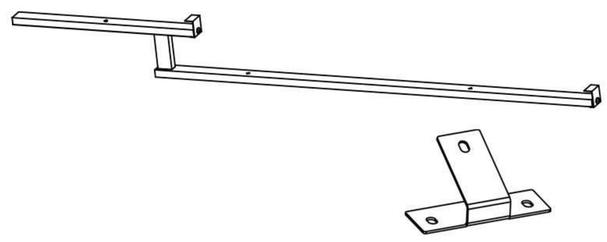

D1 2pcs

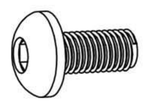

X1 2pcs

I1 2pcs

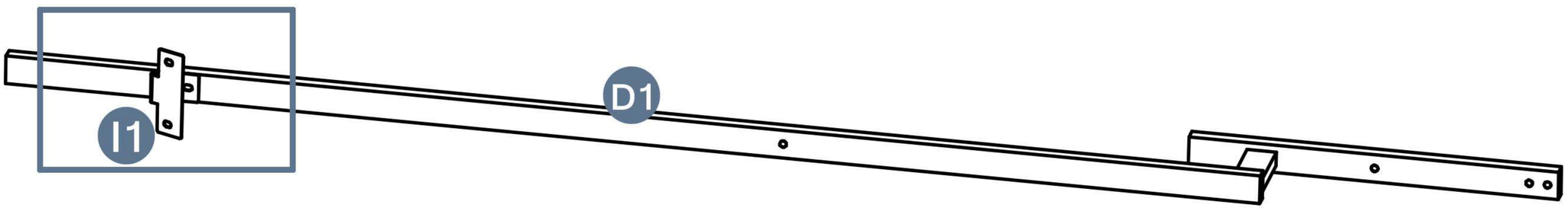

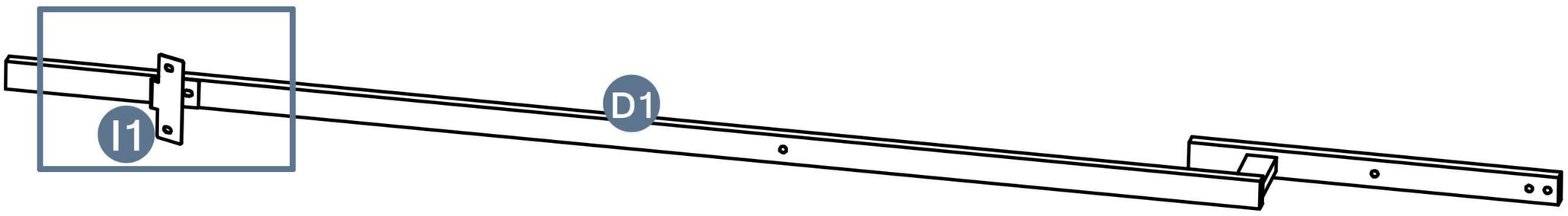

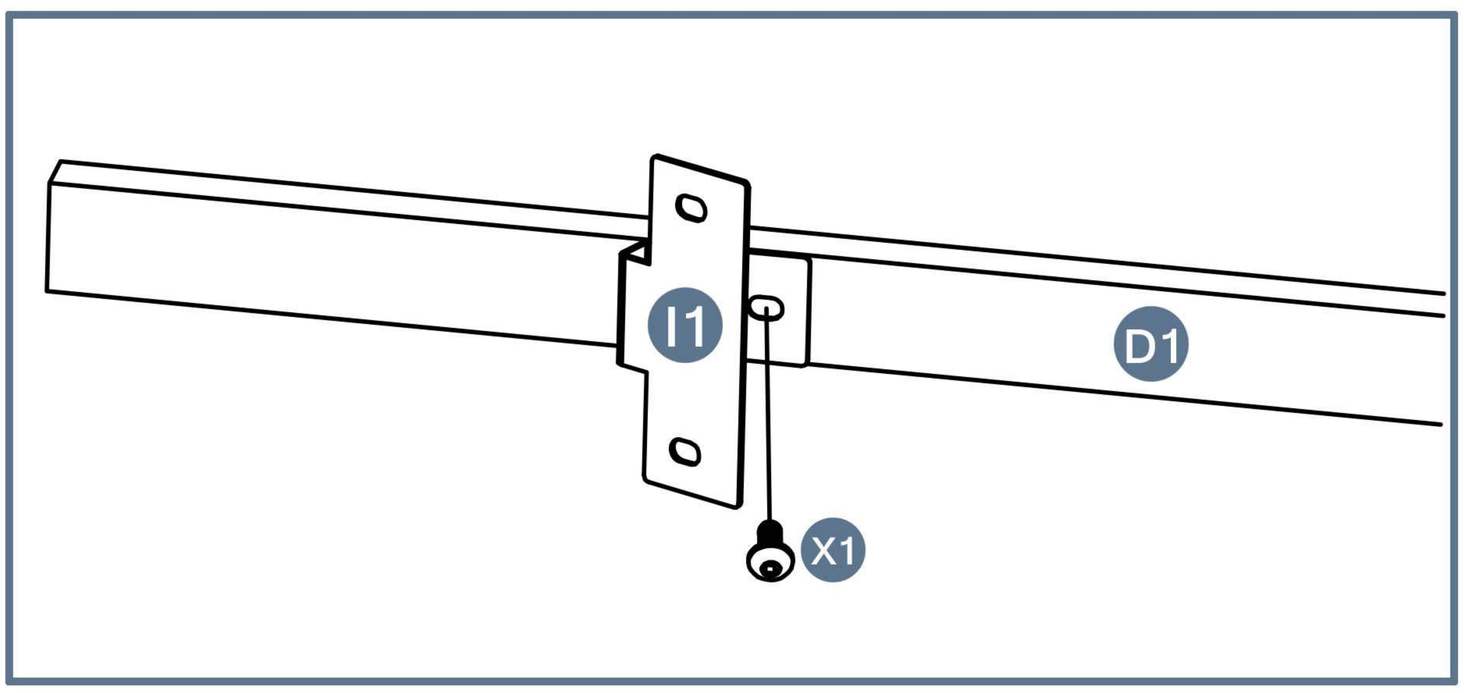

Please take care of the screws and contact the after-sales service if there is any problem with the installation or parts.

E-mail: cs.helper01@gmail.com

STEP17

Parts required

X1 8pcs

1 → 2

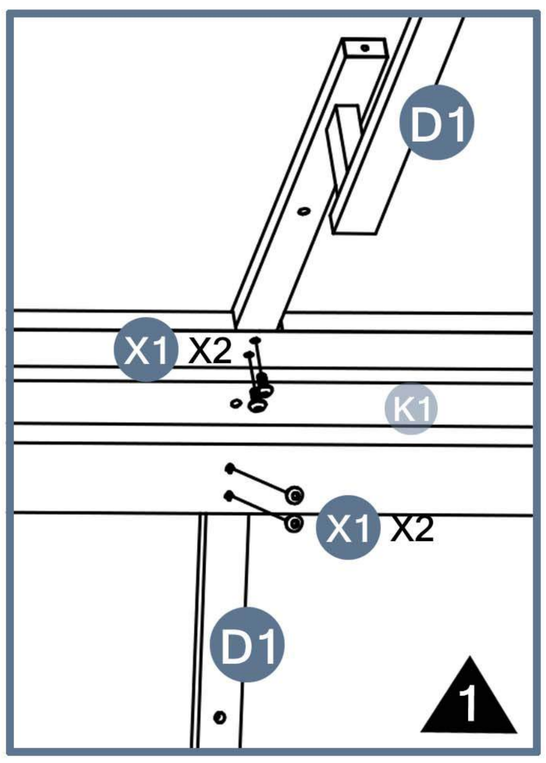

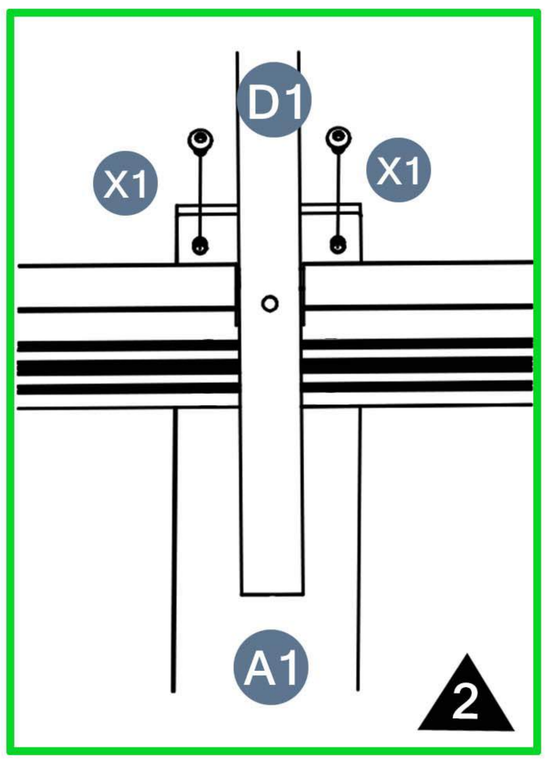

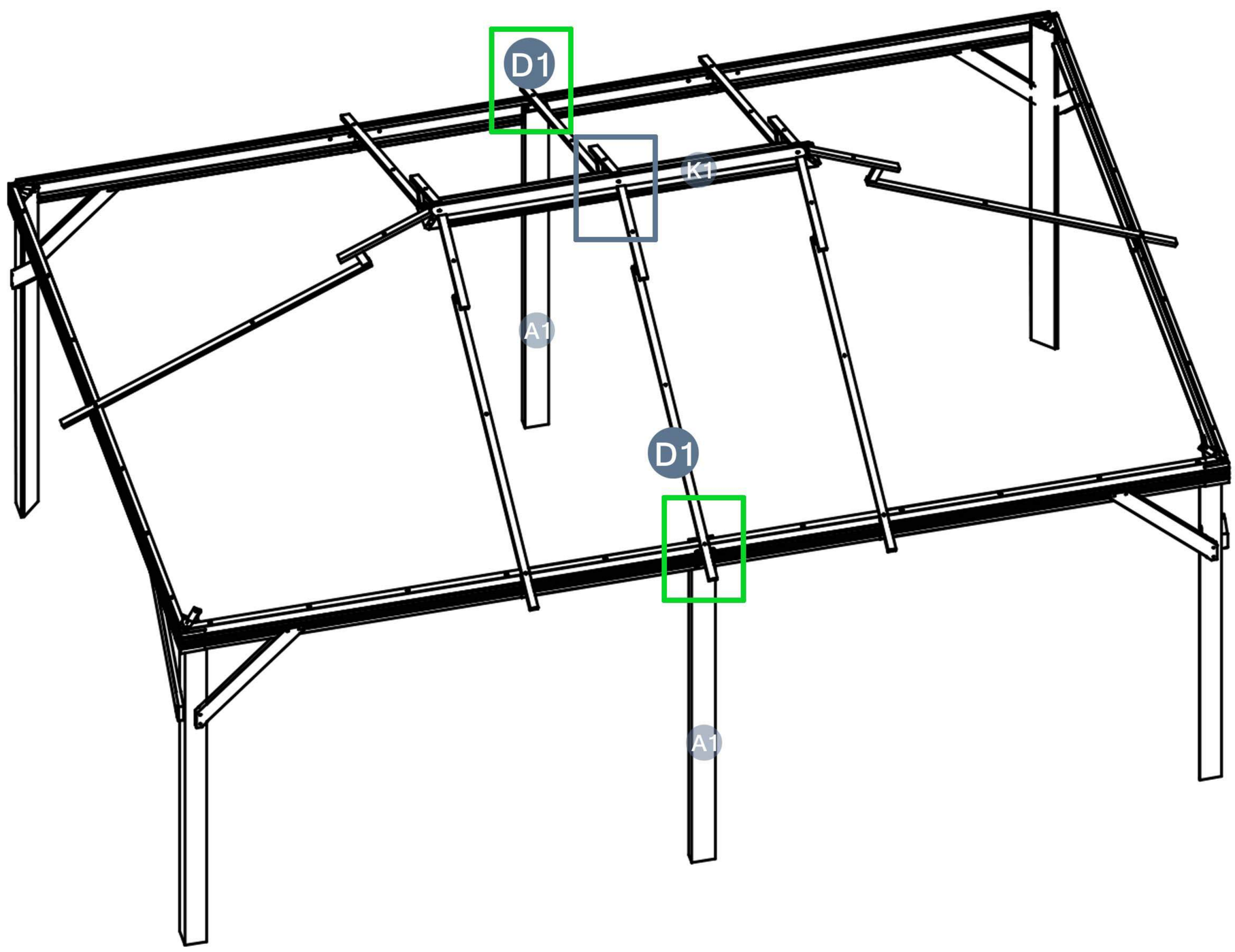

STEP18

Parts required

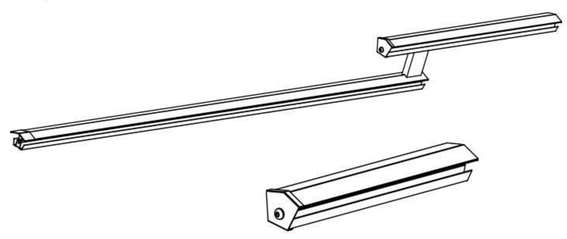

E 4pcs

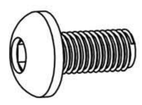

X1 16pcs

E1 4pcs

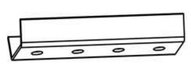

M 4pcs

1 → 2

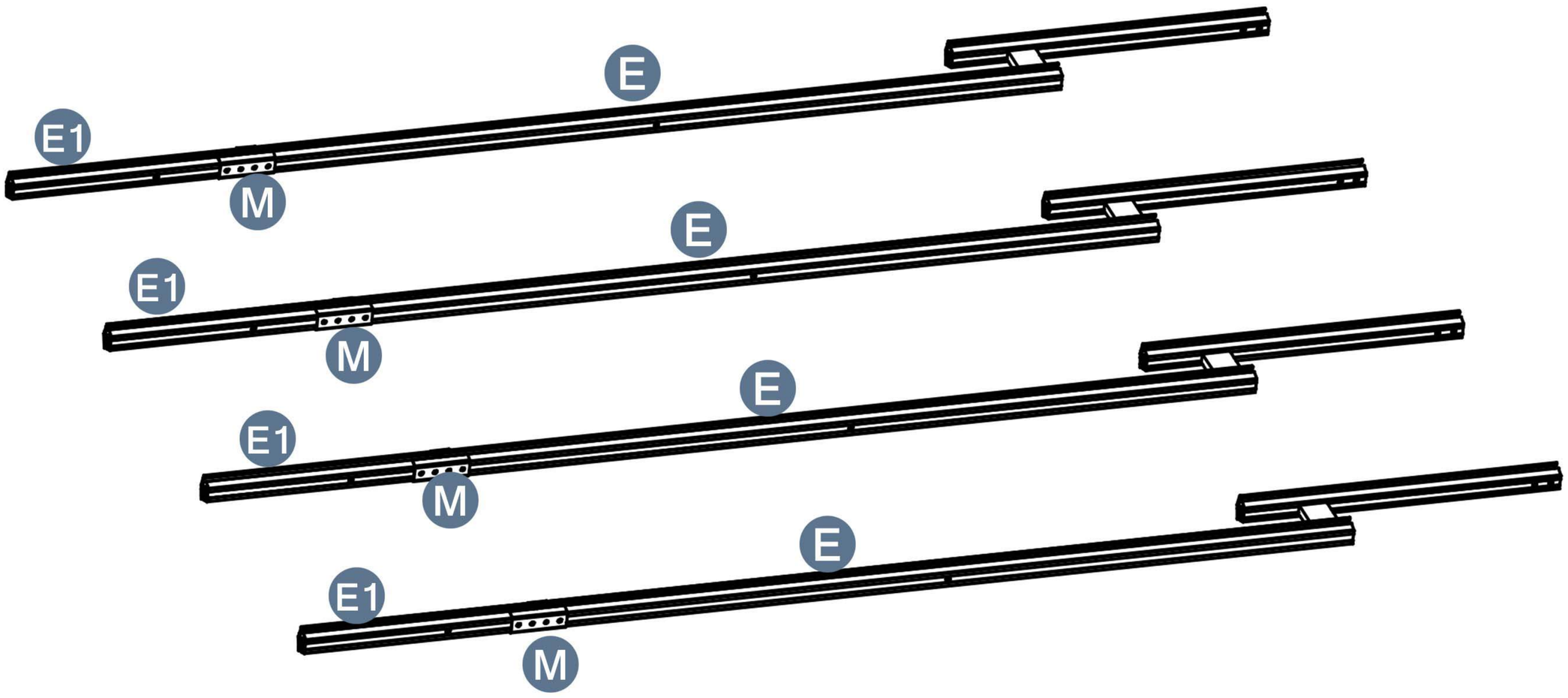

Pay attention to the position of the hole and make sure not to install it incorrectly.

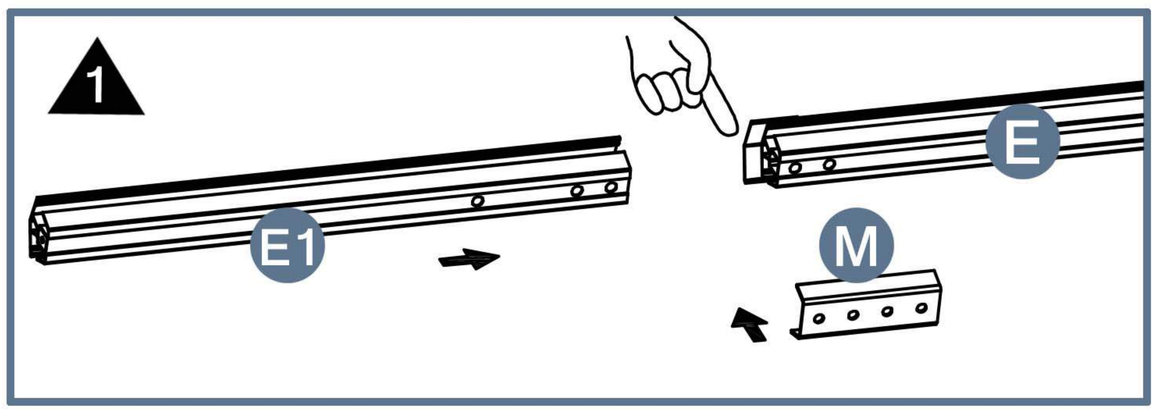

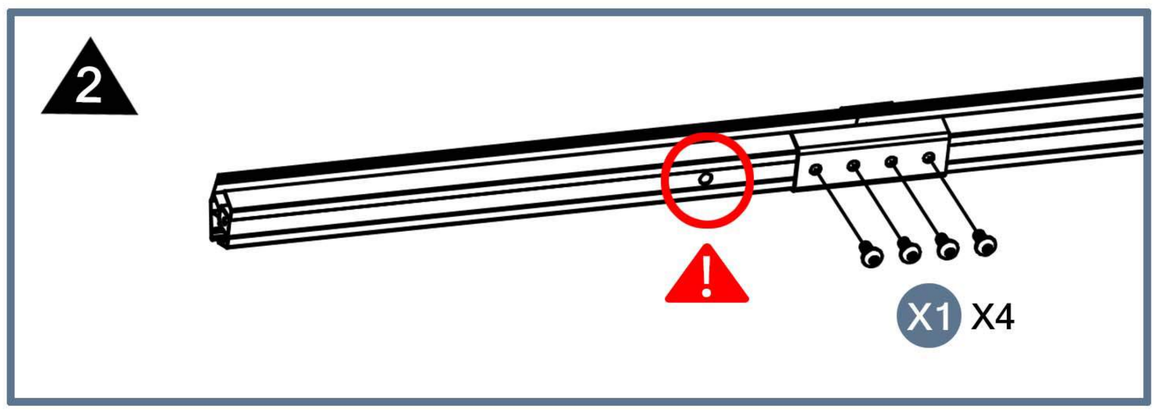

STEP19

Parts required

X1 12pcs

1 → 2

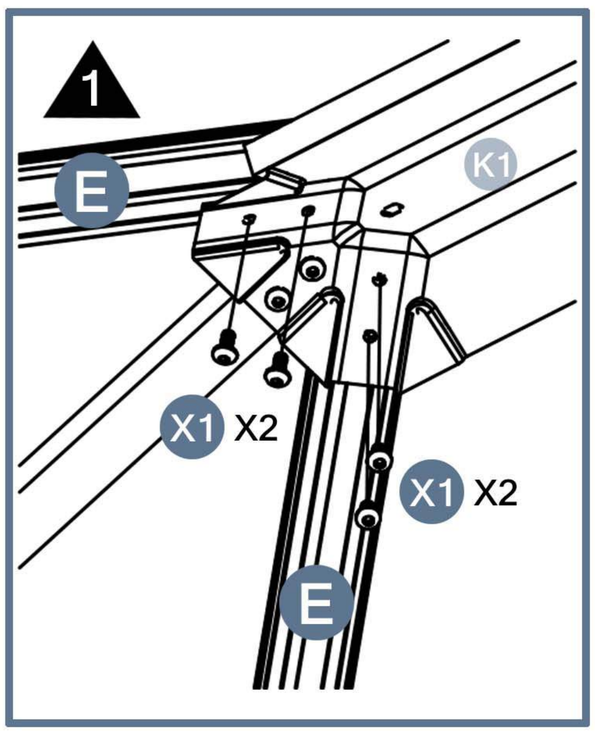

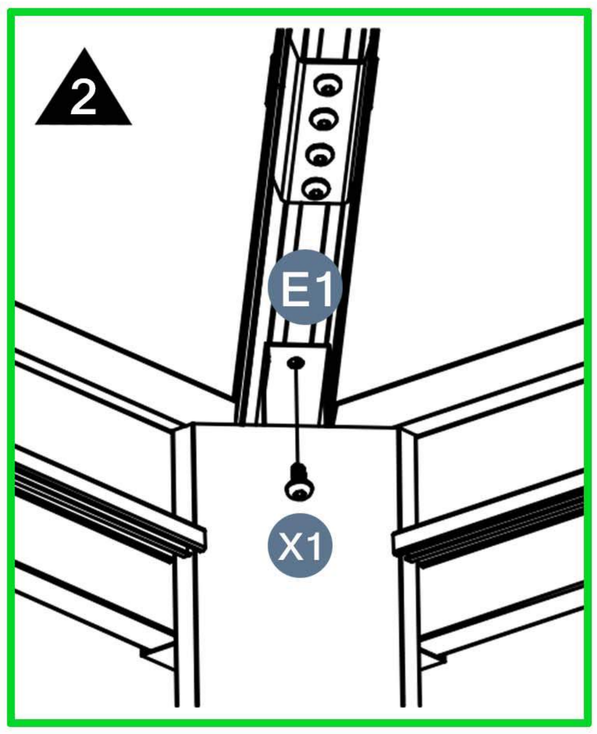

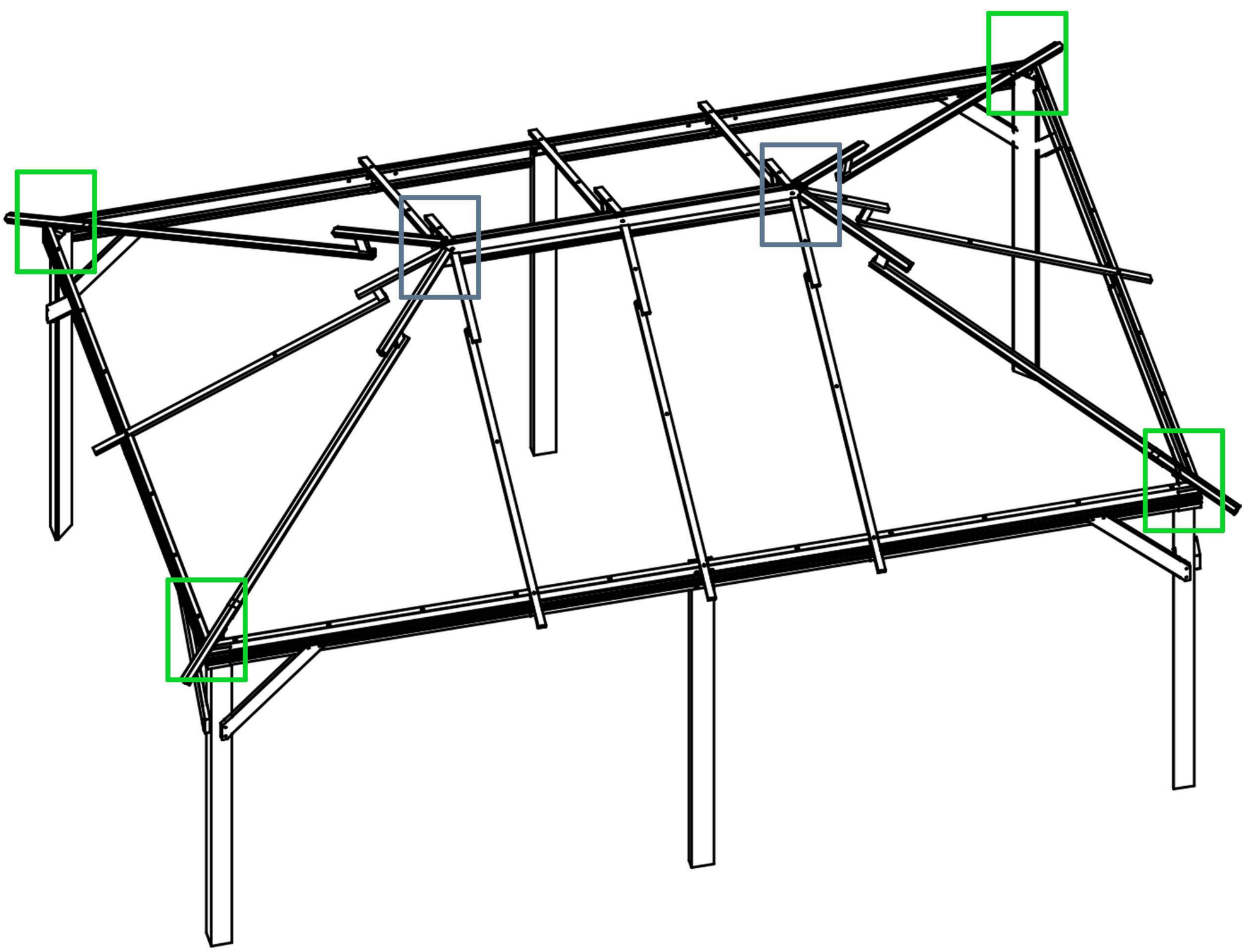

STEP20

Parts required

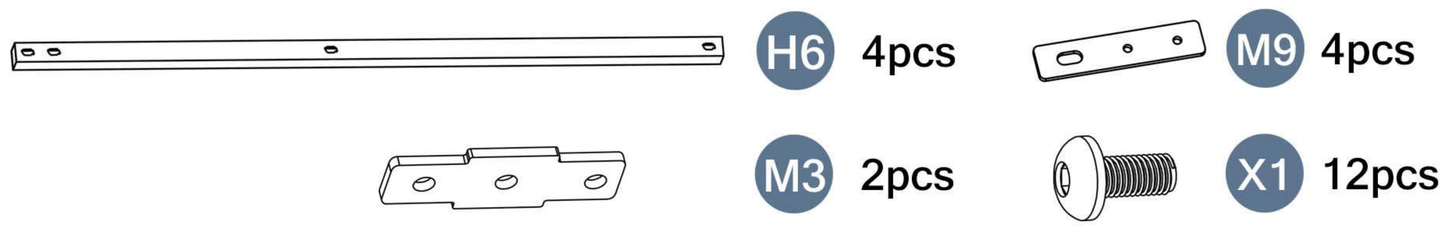

Pay attention to the spacing of the holes.

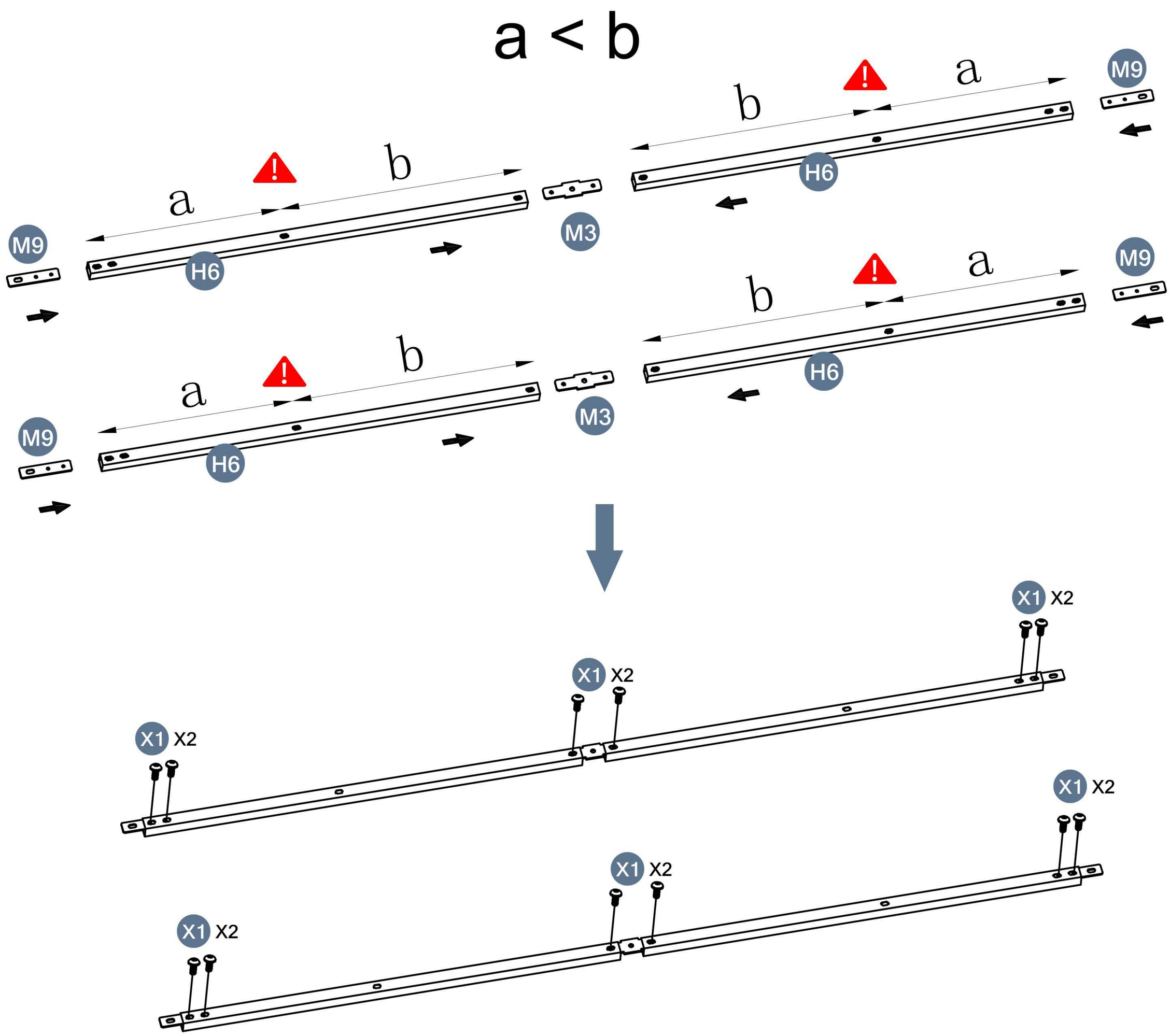

STEP21

Parts required

X1 4pcs

X5 2pcs

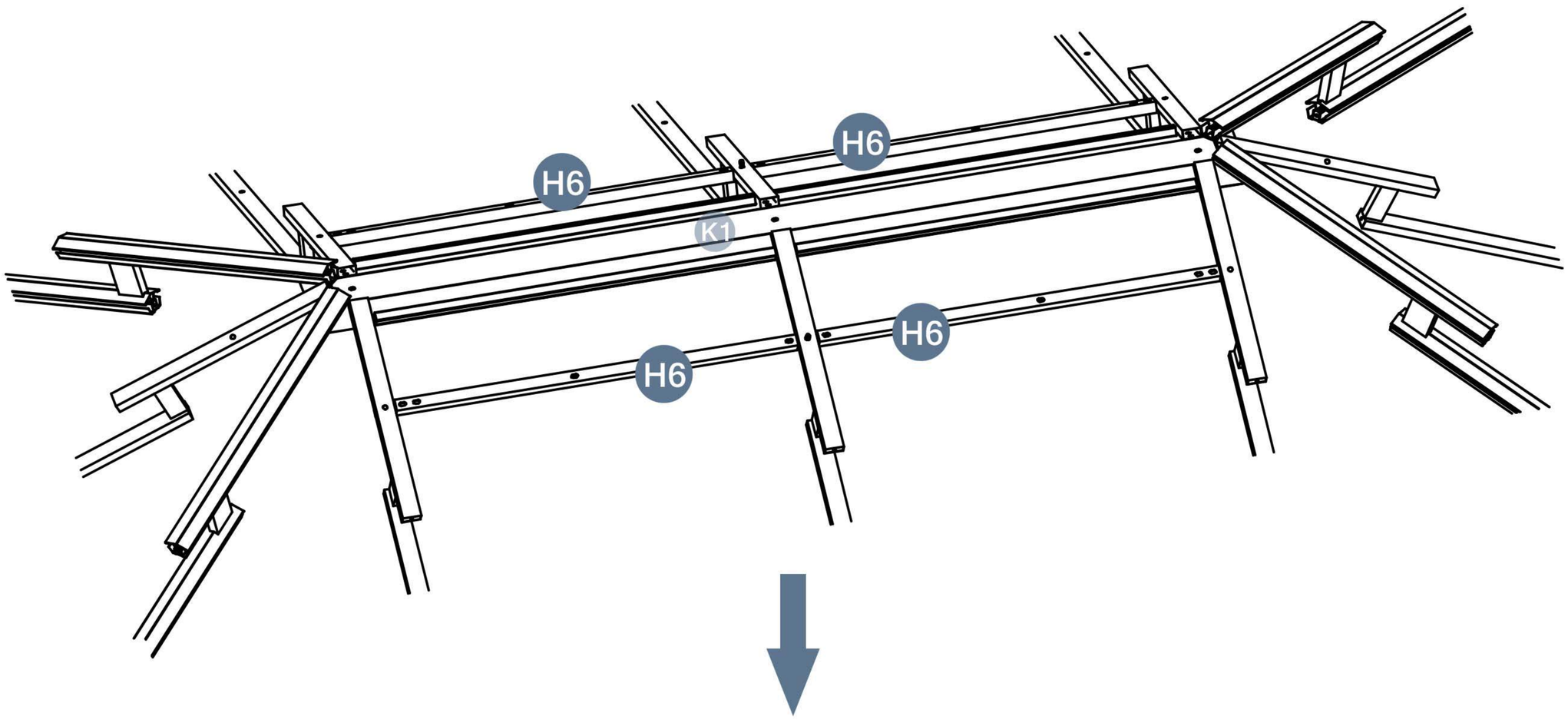

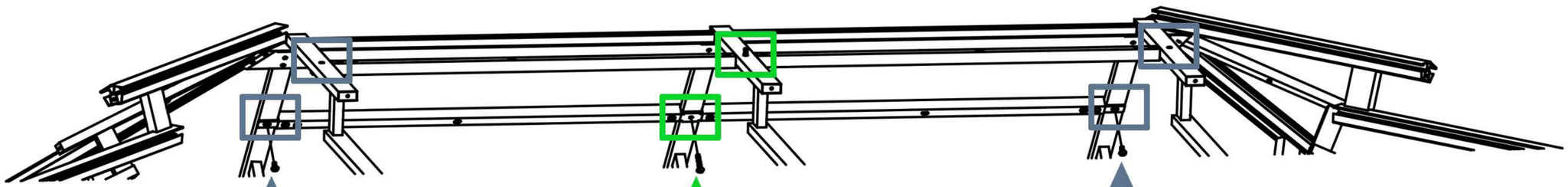

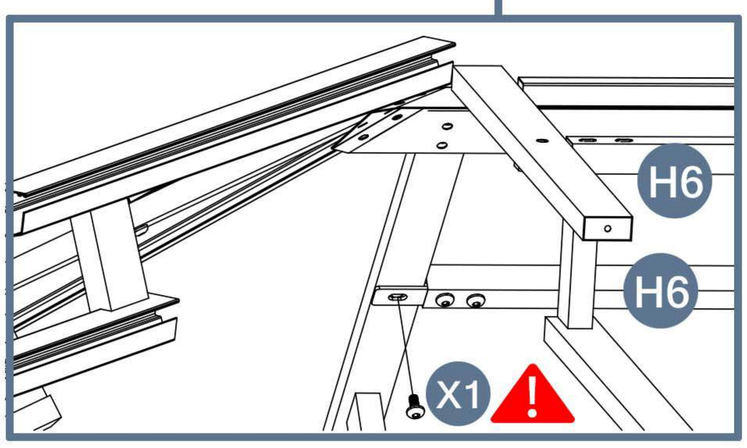

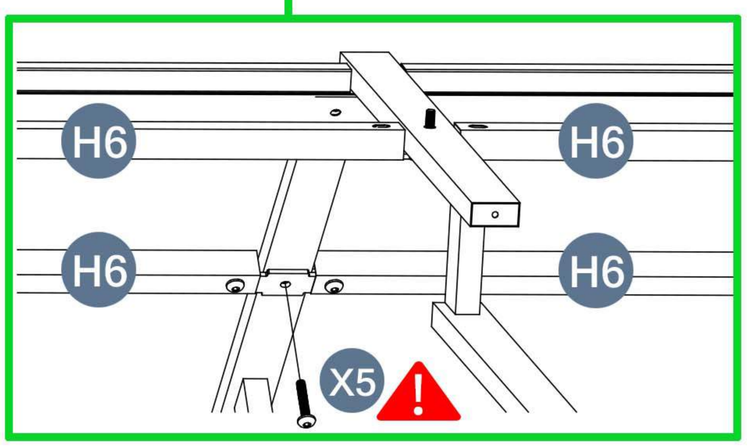

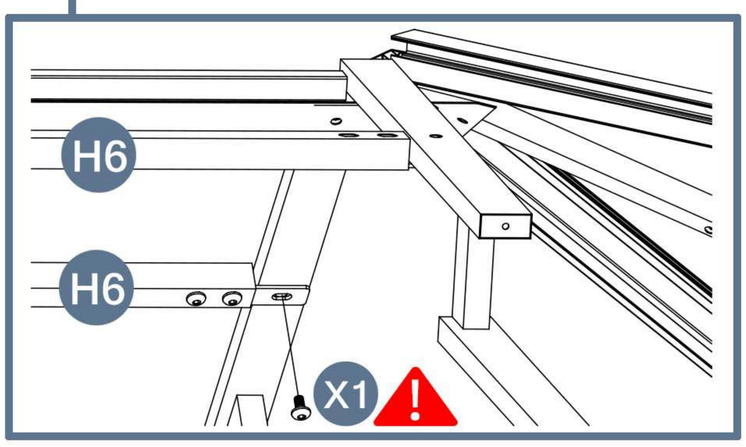

Pay attention to the differences between the screws.
Please keep the X5 nut safe; it will be needed later.

STEP22

Parts required

X5 4pcs

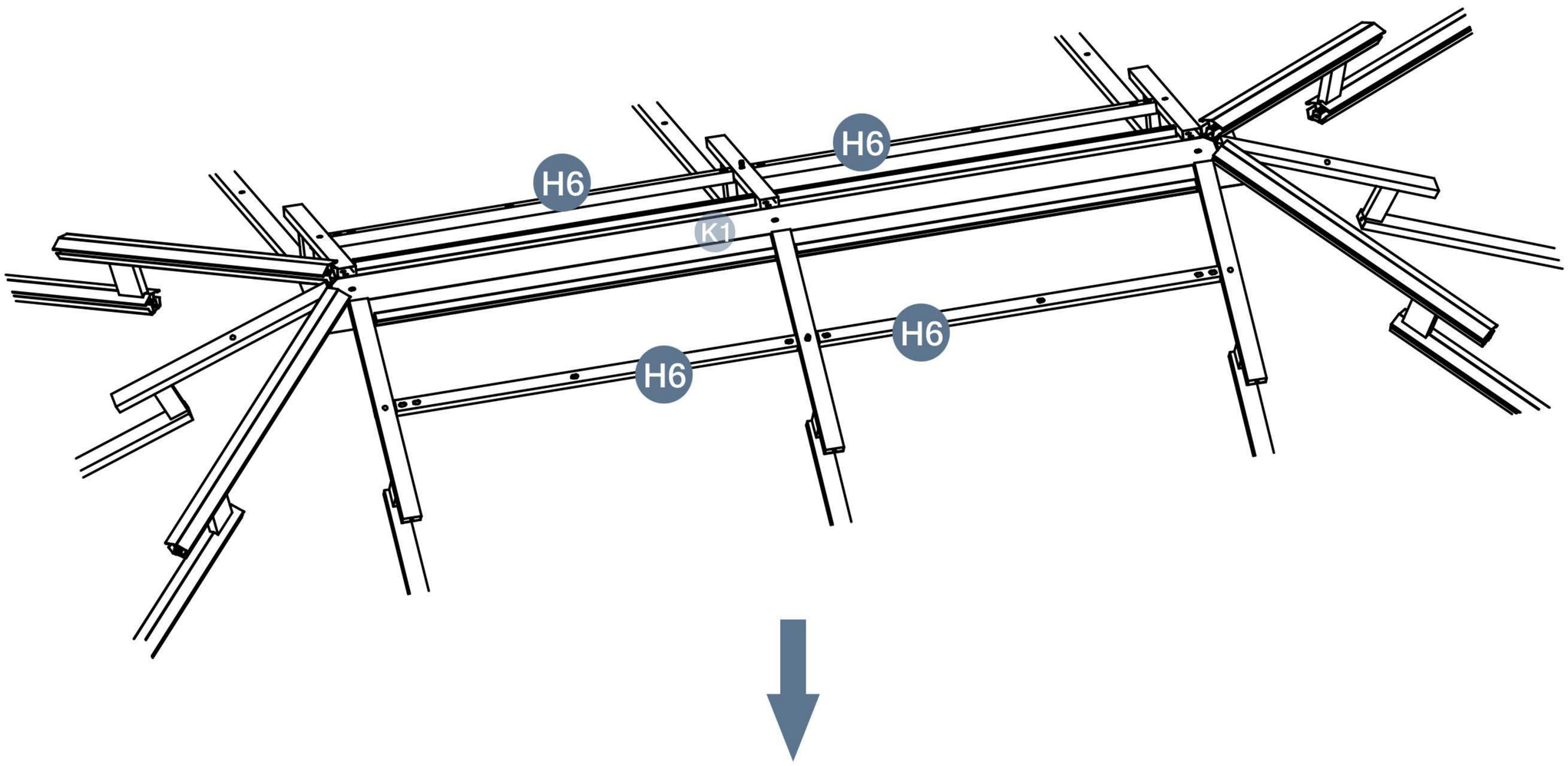

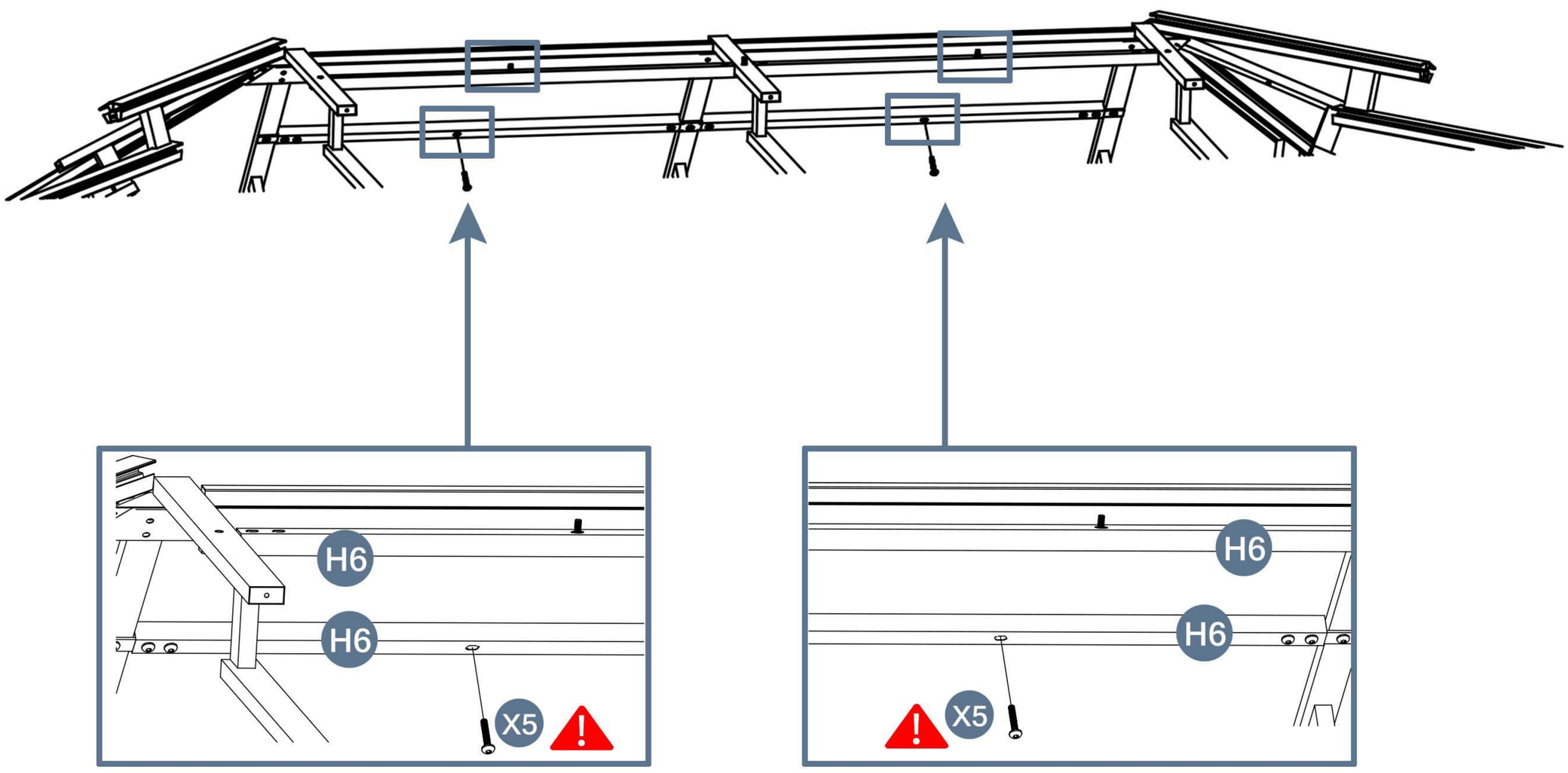

Please keep the X5 nut safe; it will be needed later.

STEP23

Parts required

X5 2pcs

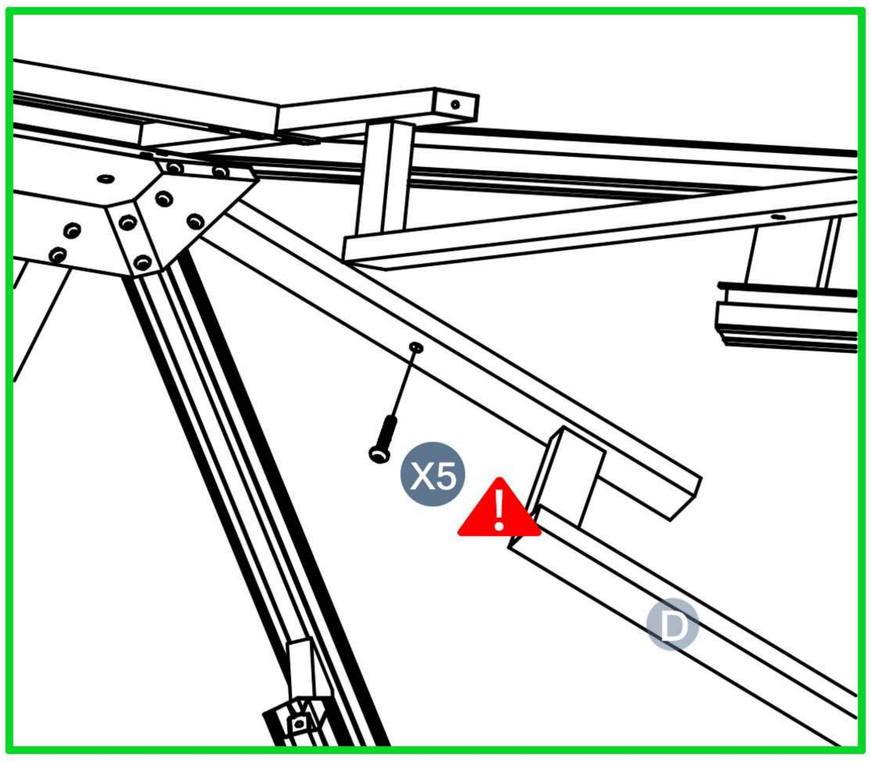

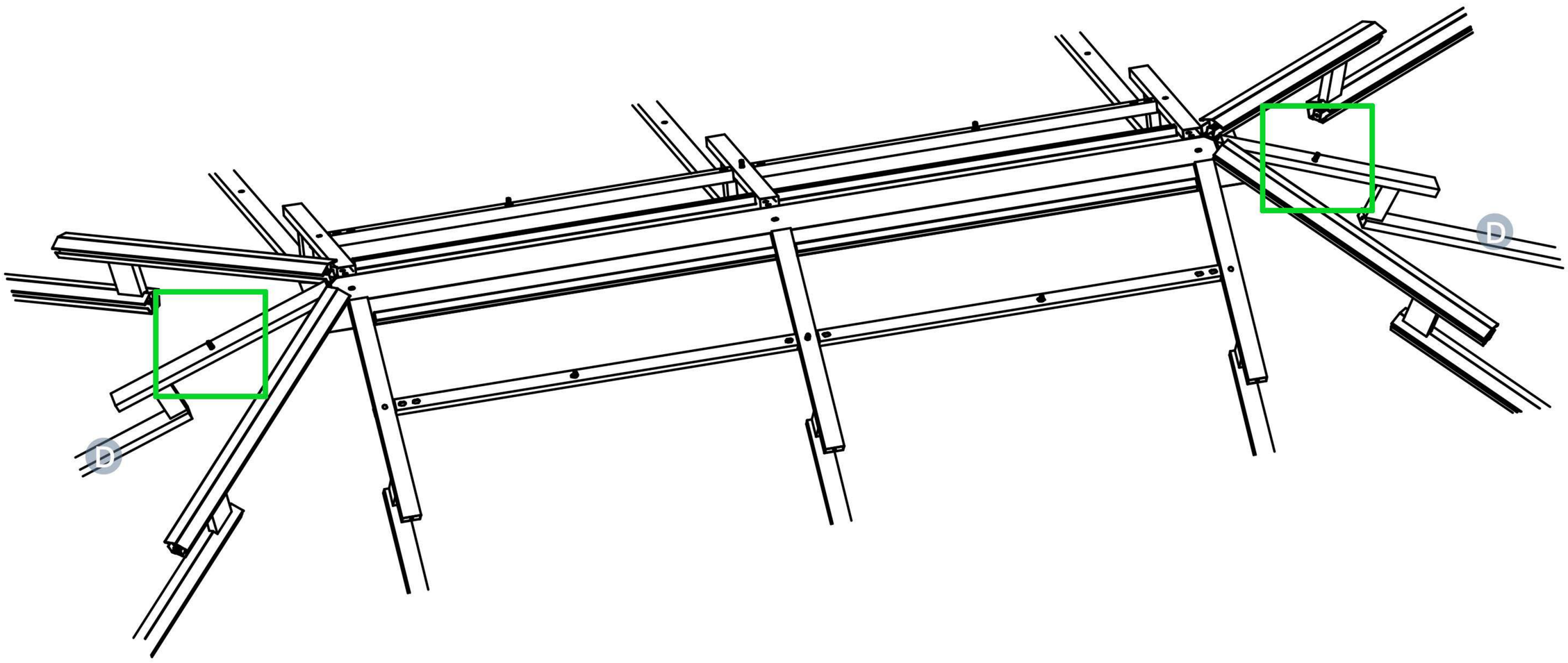

Please keep the X5 nut safe; it will be needed later.

STEP24

Parts required

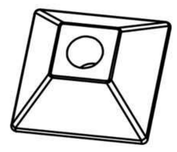

M5 8pcs

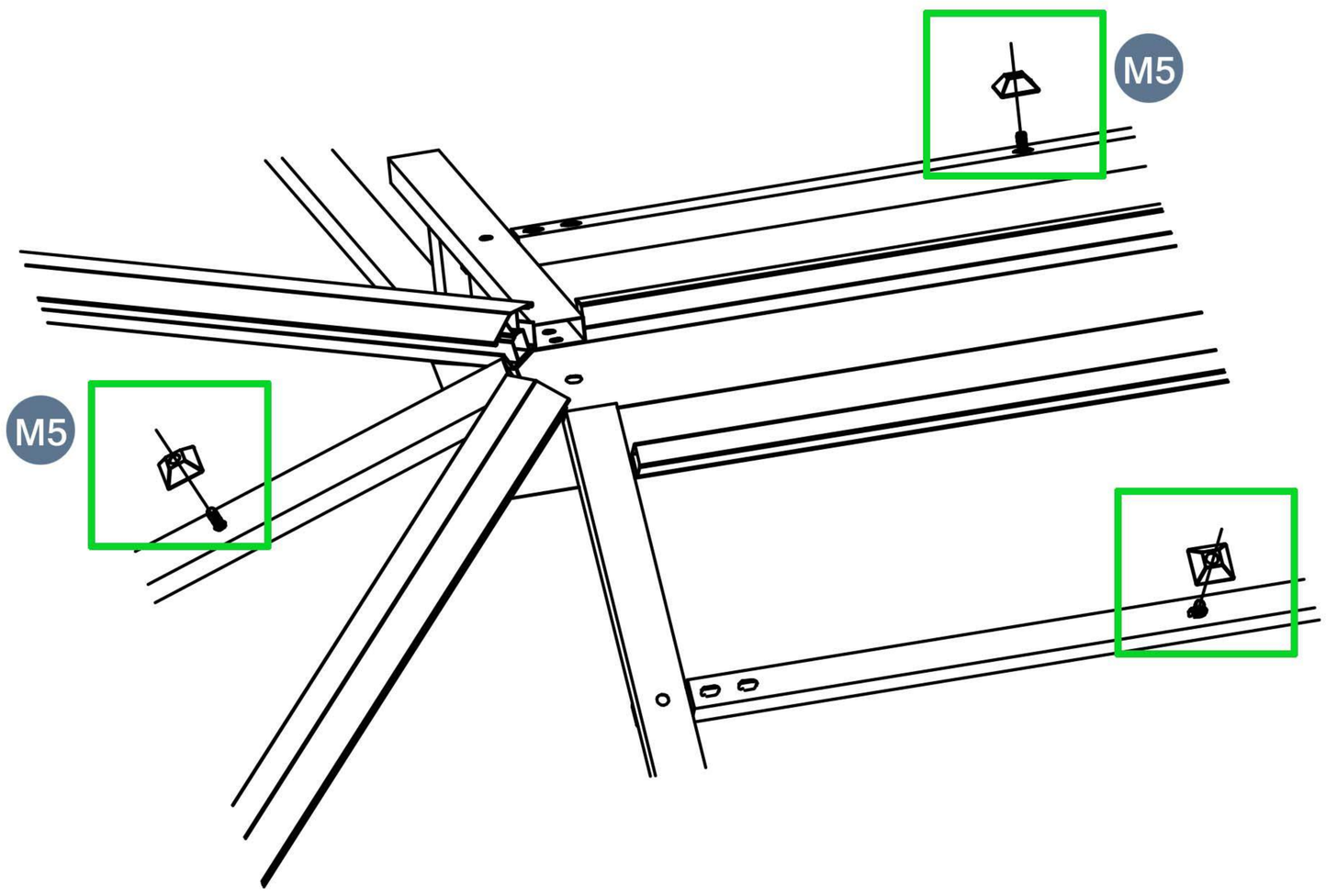

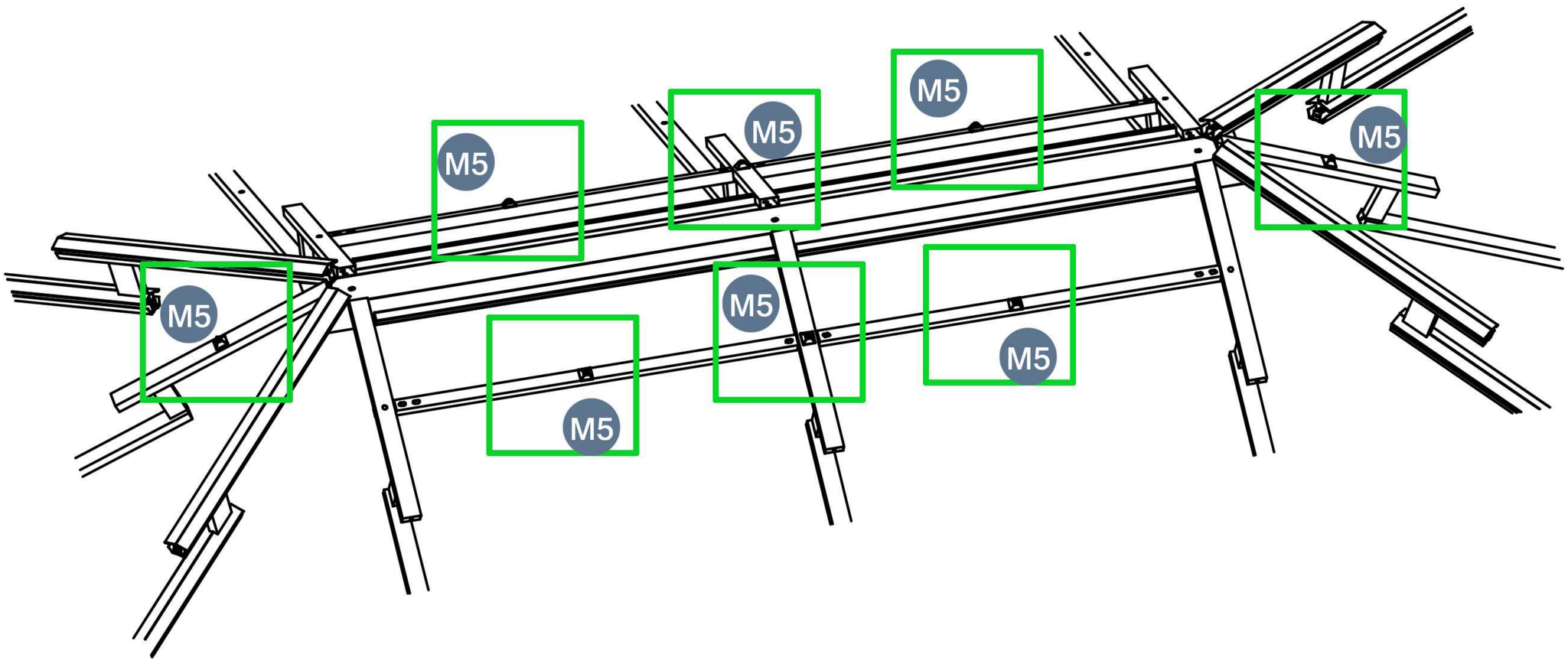

To prevent the loss of M2 and M1

we mounted the M2 and M1 on top of the E and D1 ahead of time

Before installing step 25, please remove the 4 M2's
and 2 M1's from the part E and D1. (Reinstall them during step 27/step 29) .

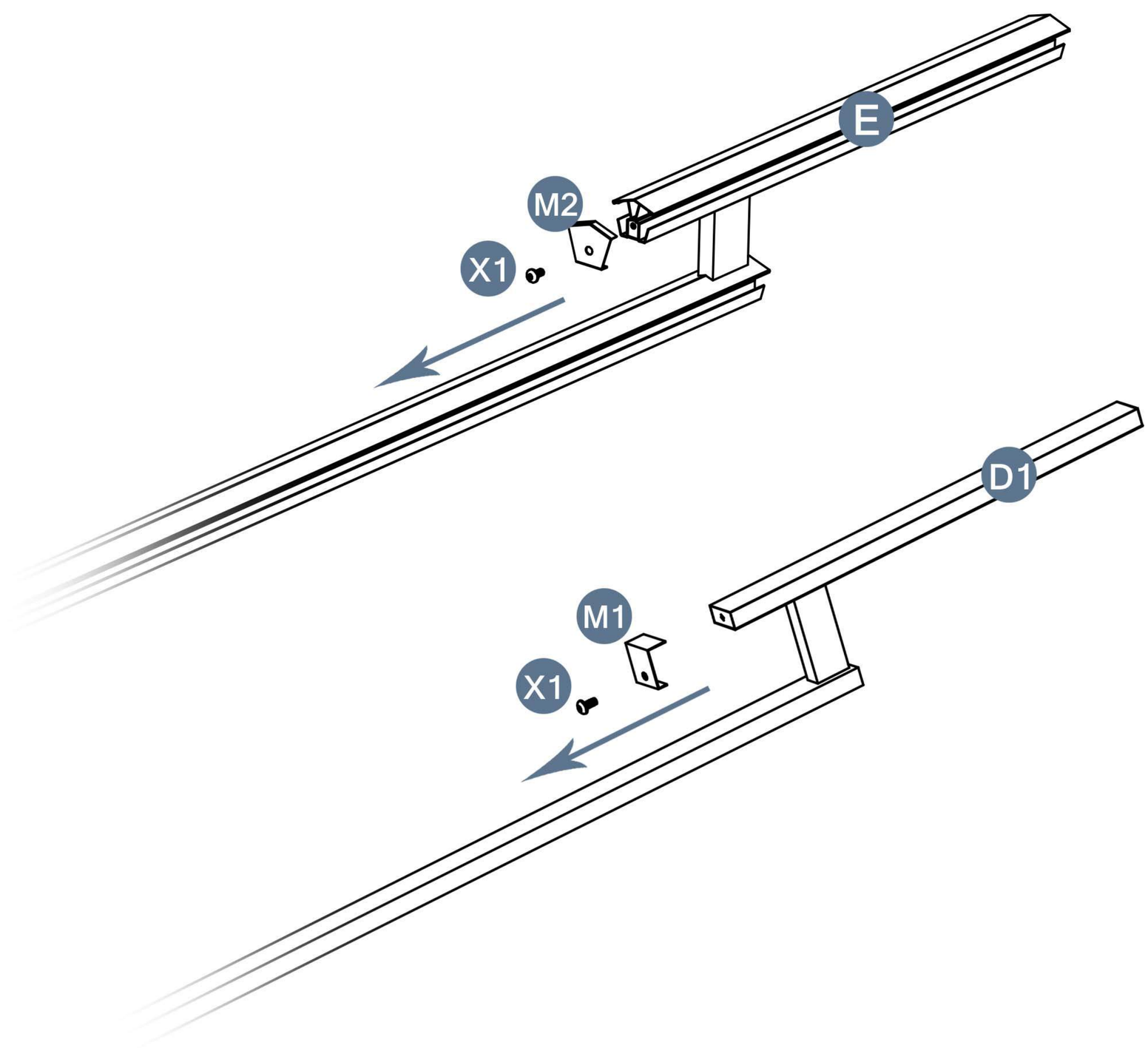

STEP25

Parts required

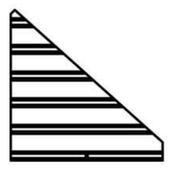

O5 2pcs

V5 2pcs

1 → 2 → 3

Install the X5 nut that has been kept.

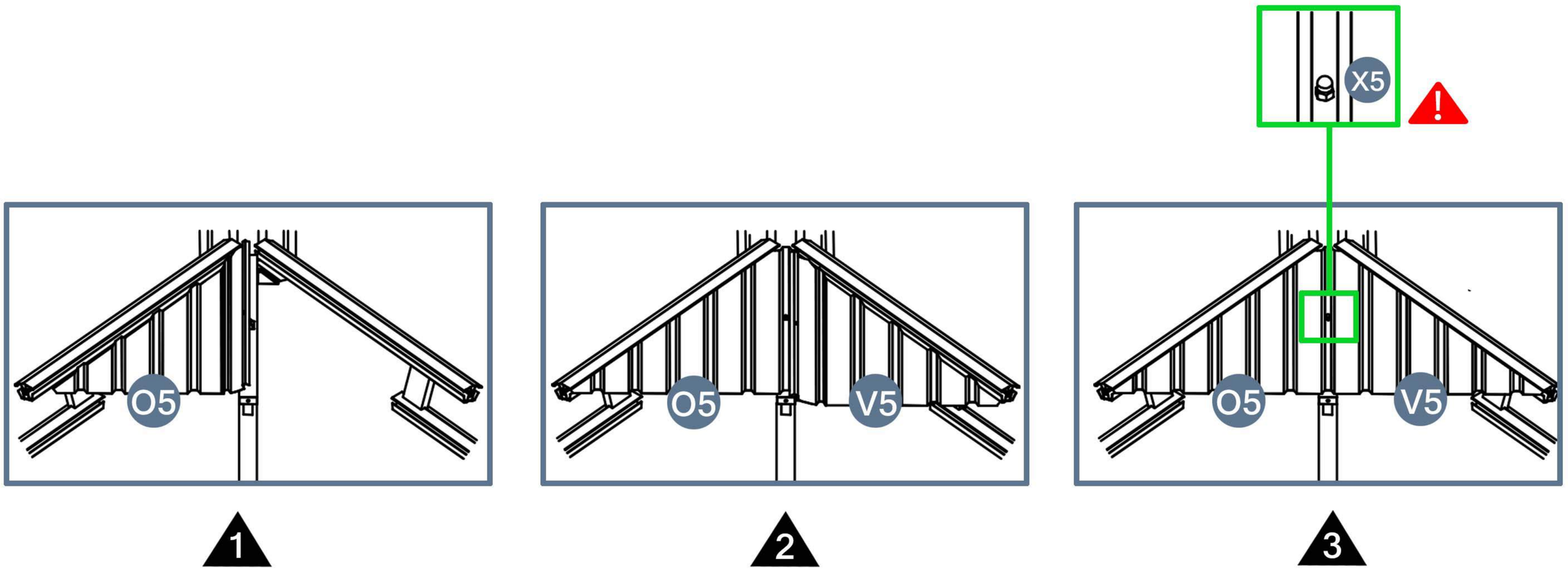

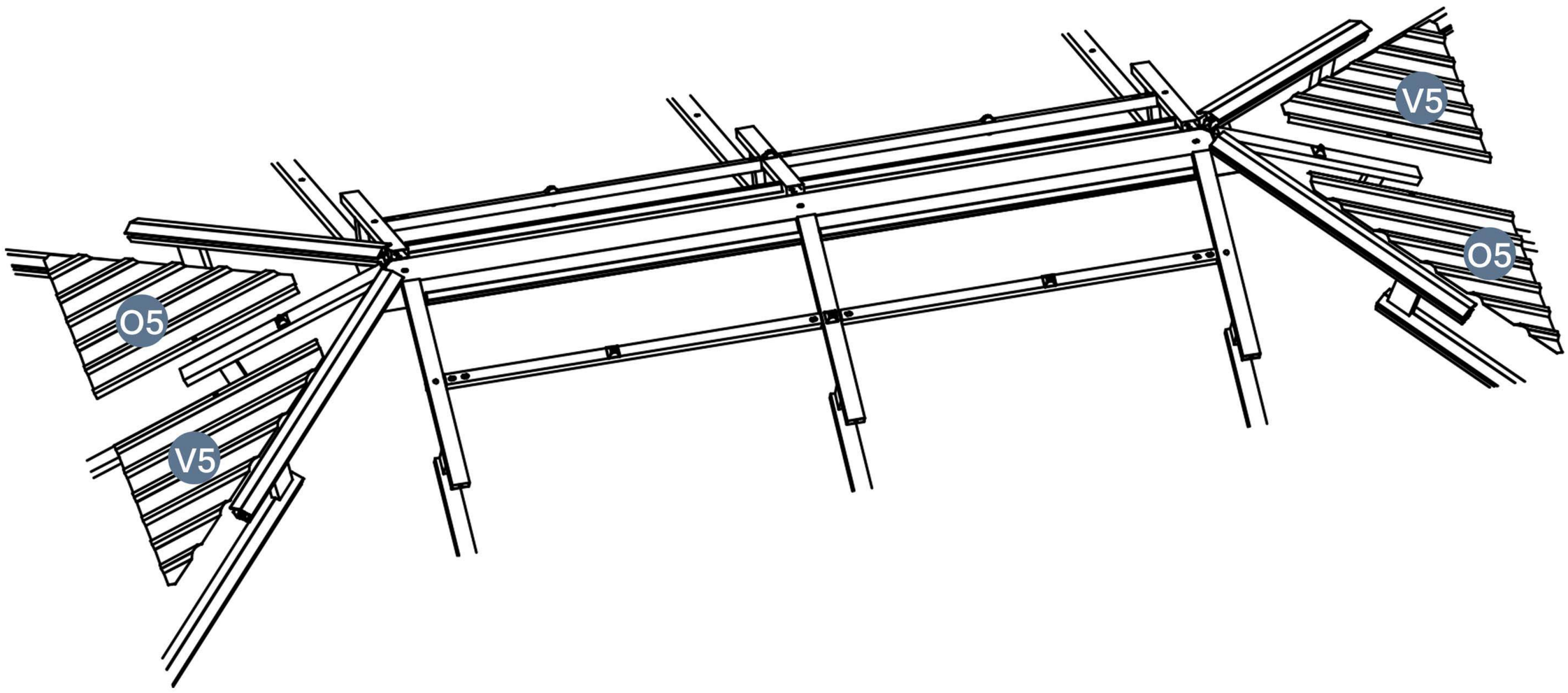

STEP26

Parts required

G3 2pcs

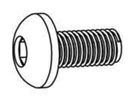

X1 2pcs

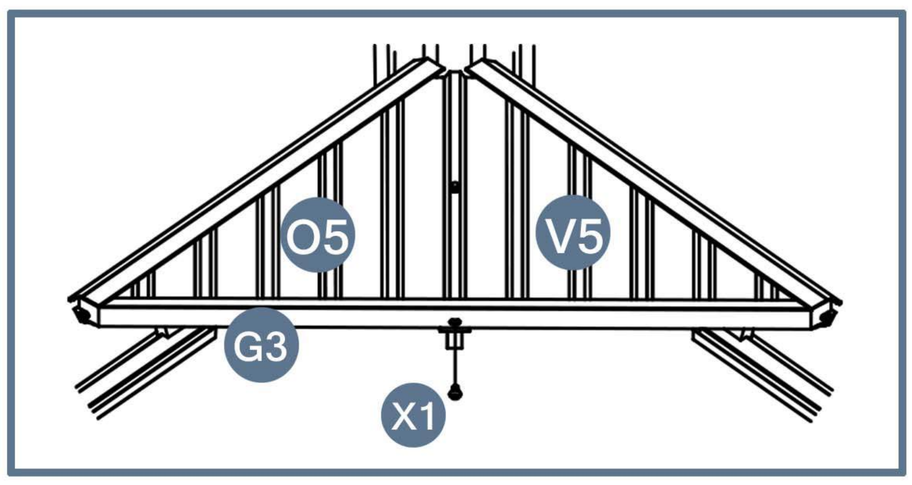

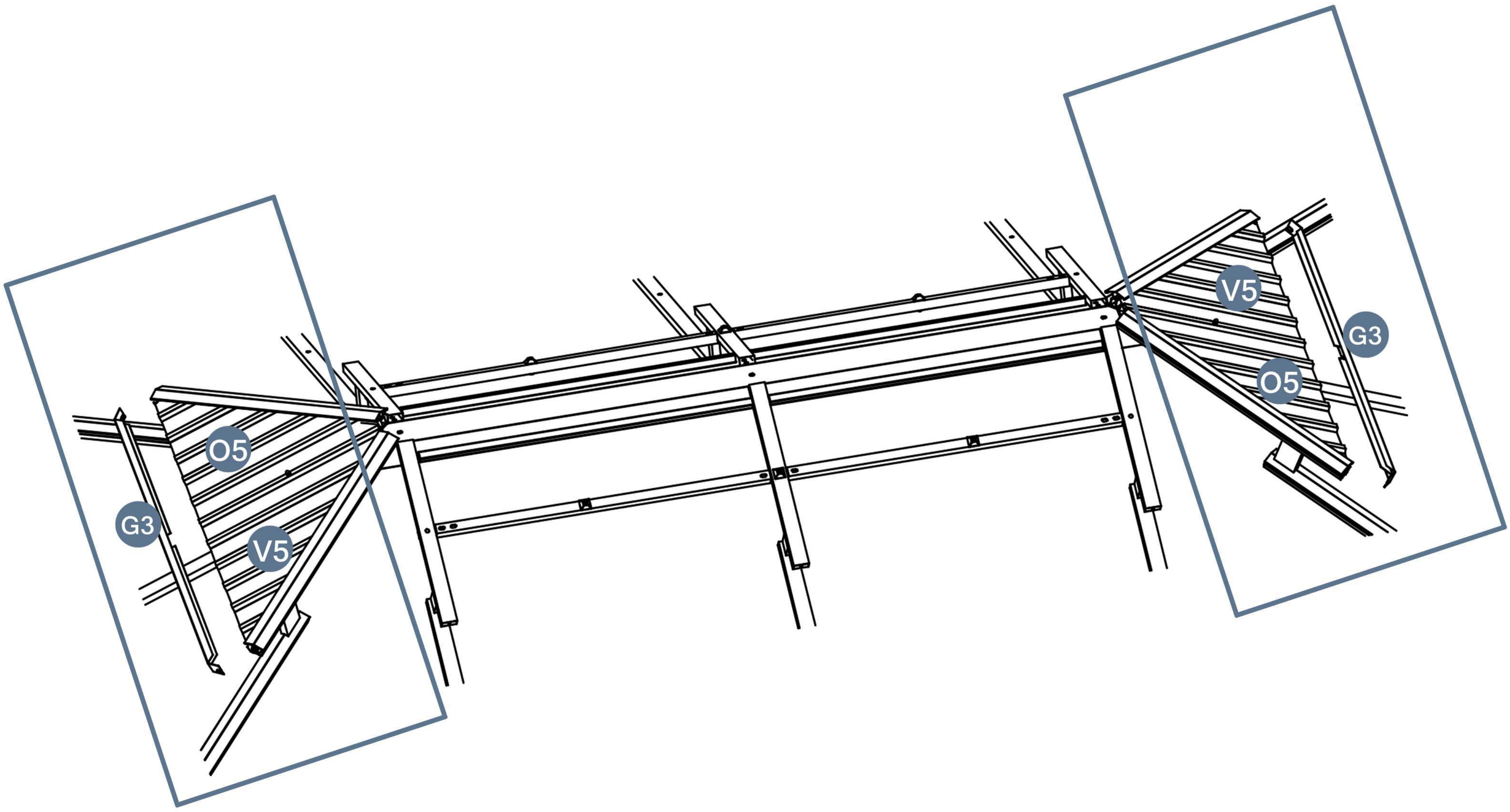

STEP27

Parts required

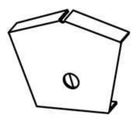

M2 4pcs

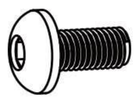

X1 4pcs

To make installation easier later, please do not tighten the M2.

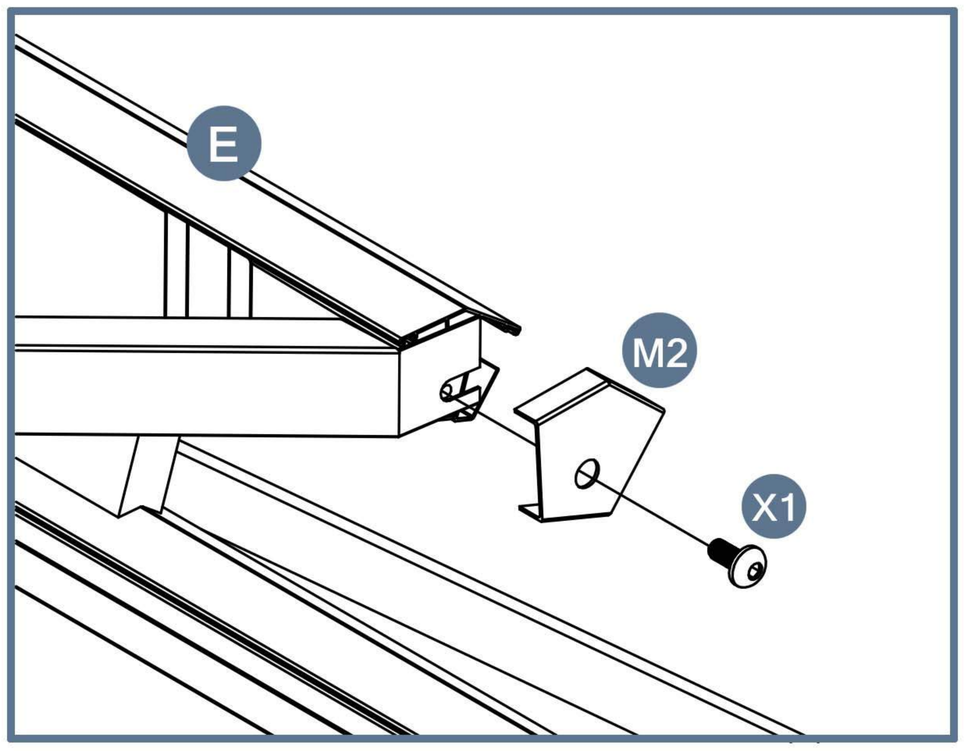

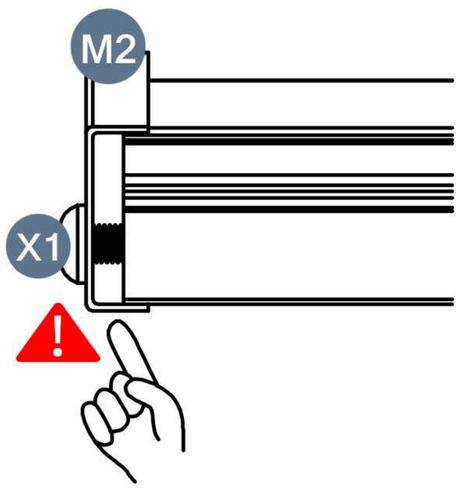

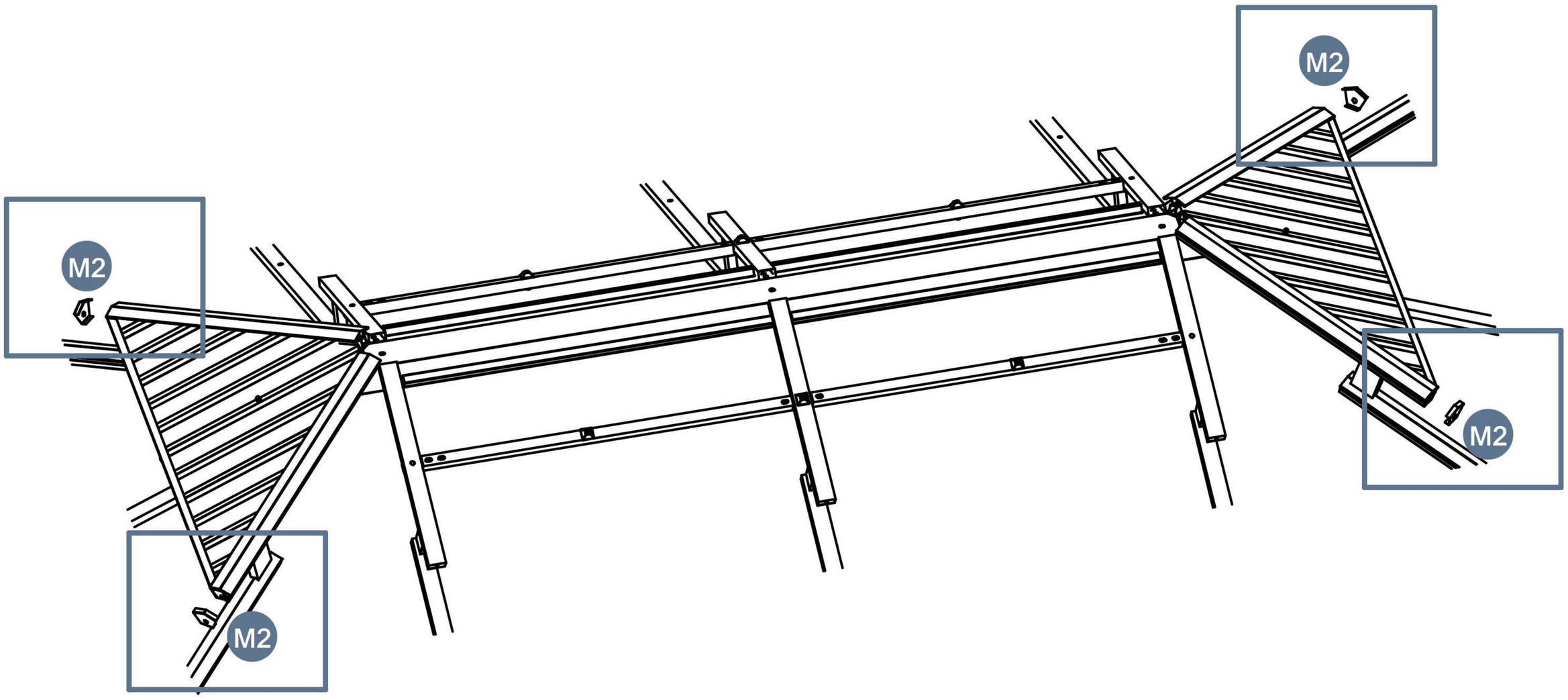

STEP28

Parts required

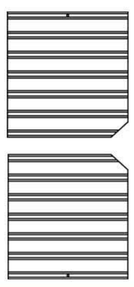

Y7 2pcs

N7 2pcs

N8 4pcs

In order to facilitate the installation, it is recommended to leave one side and not install it for the time being. Wait for the installation in step 30 to complete before installing.

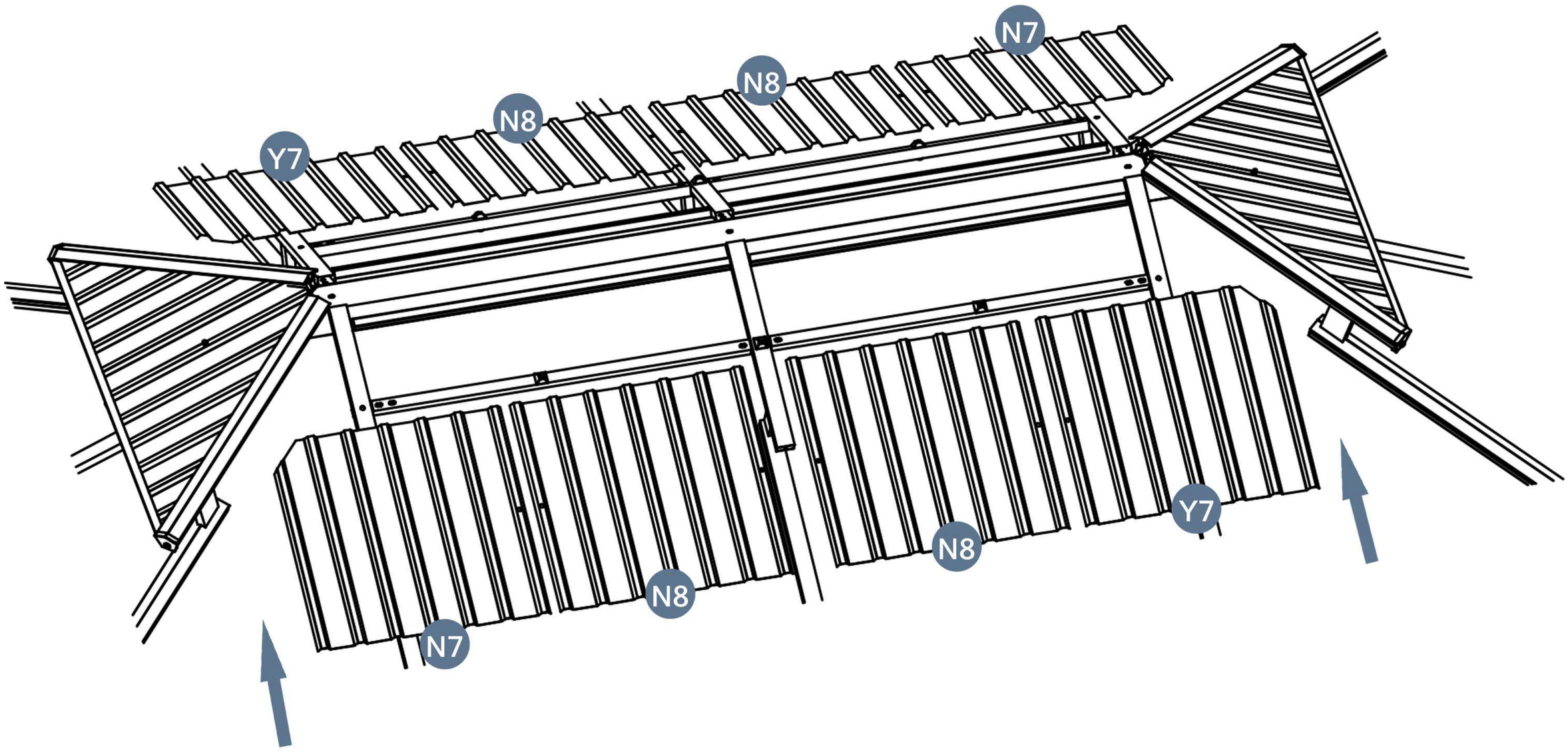

Install the X5 nut that has been kept.

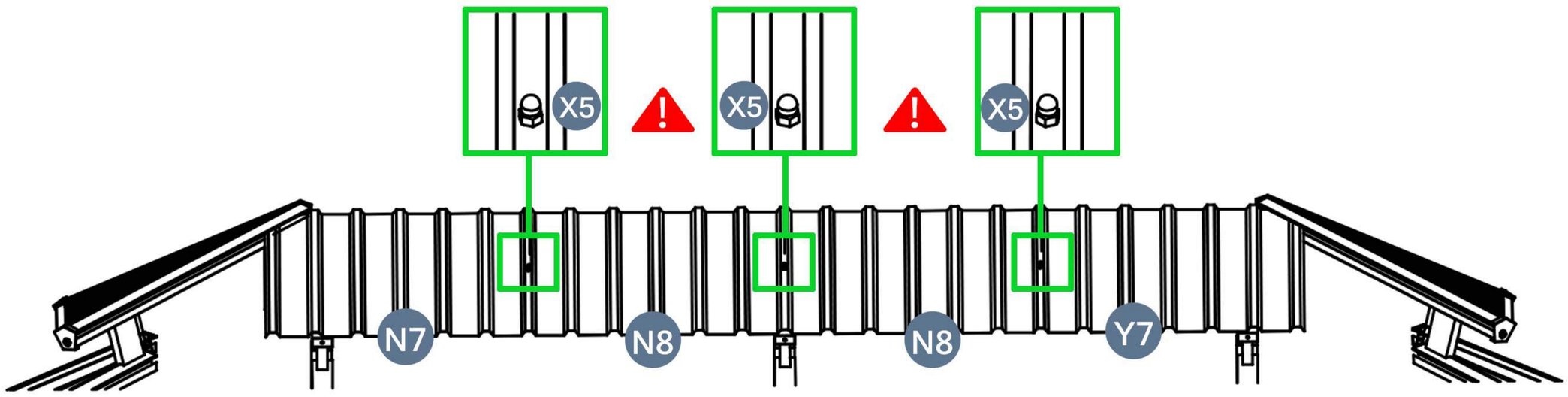

STEP29

Parts required

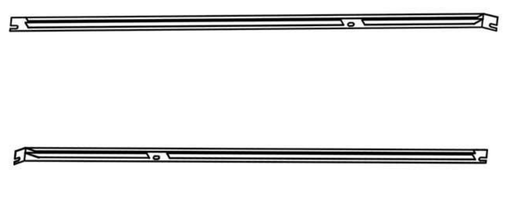

G4 2pcs

G5 2pcs

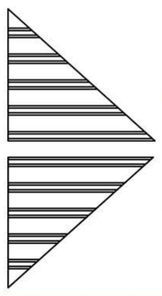

N6 2pcs

Y6 2pcs

M1 2pcs

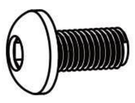

X1 6pcs

1 → 2 → 3 → 4 → 5

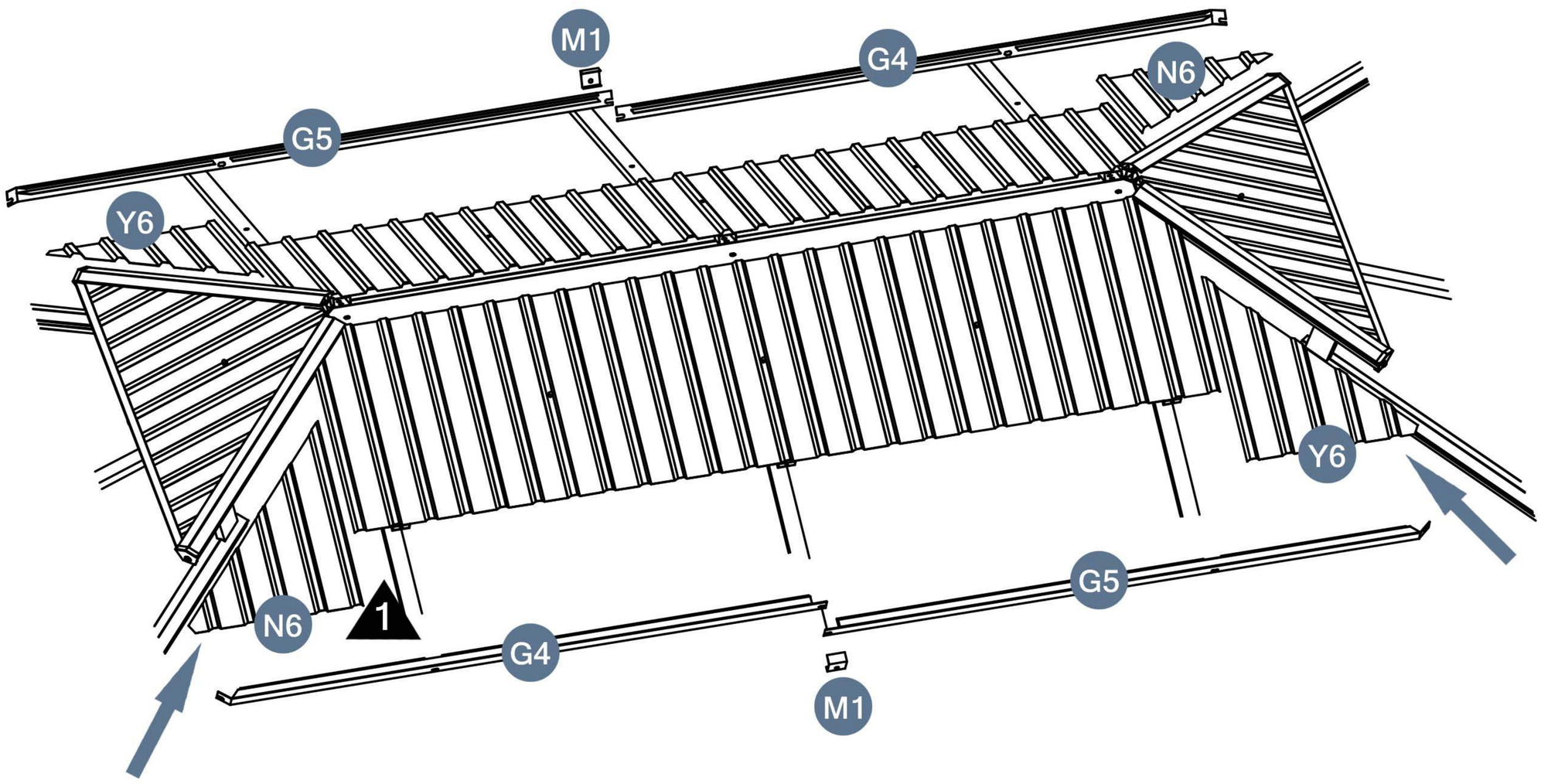

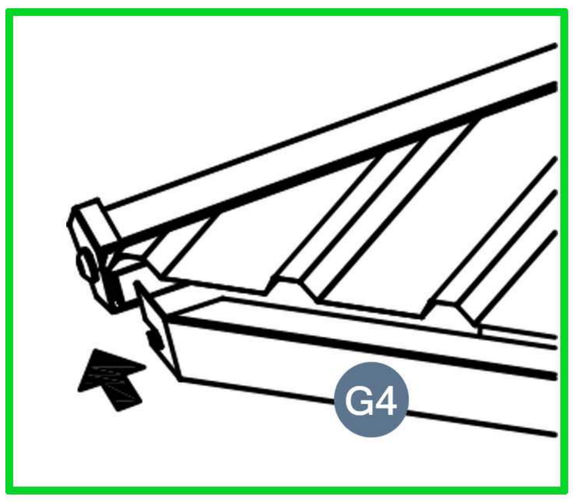

2

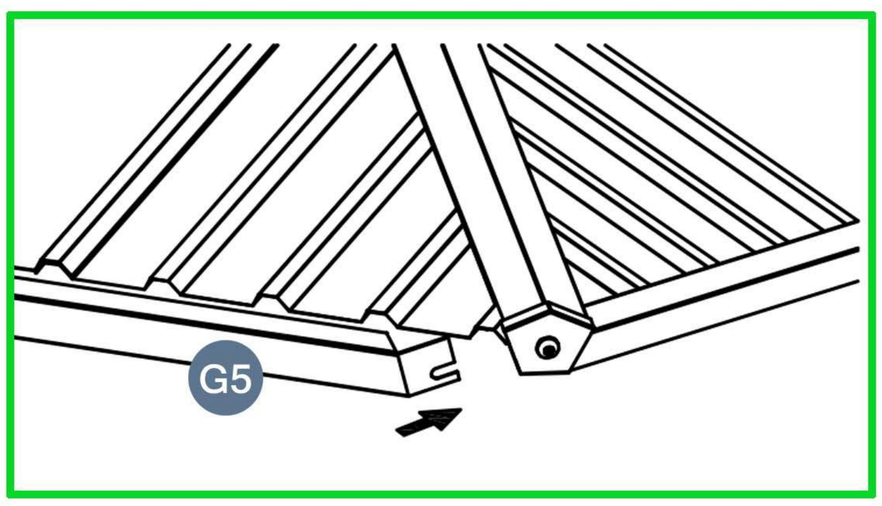

3

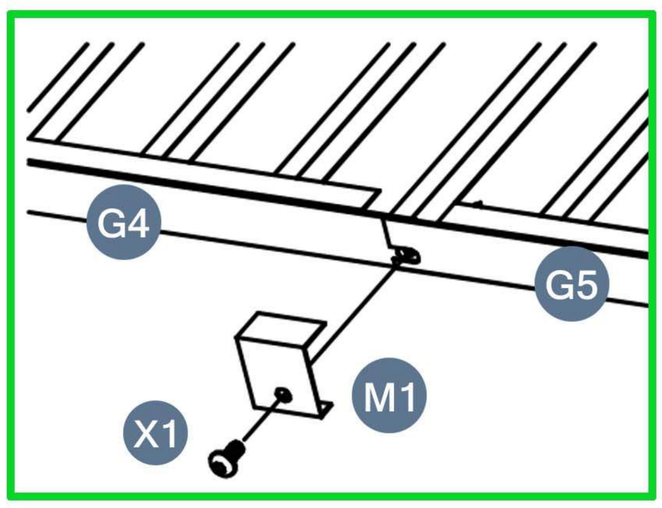

4

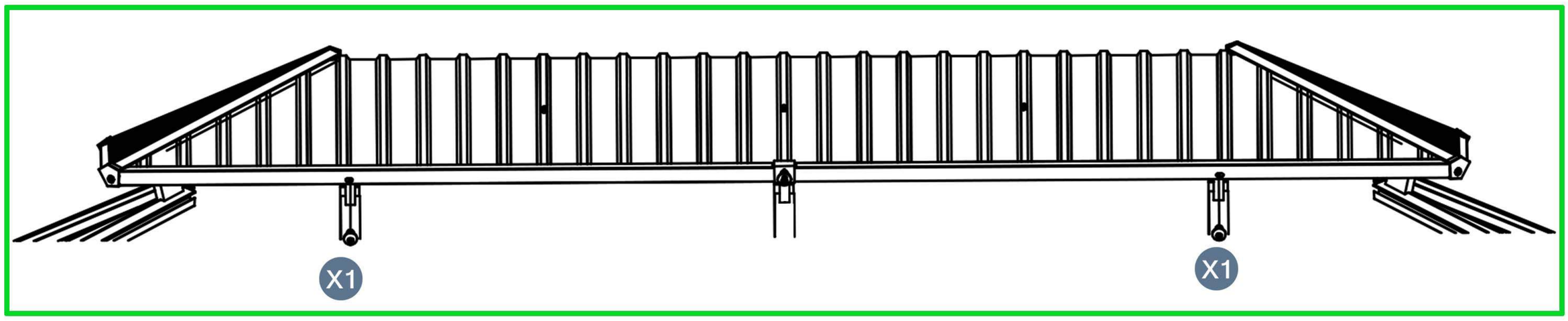

5

⚠ After installation, please check if each screw is tightened.

STEP30

Parts required

M7 2pcs

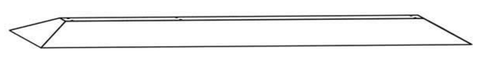

K 1pcs

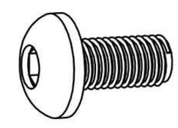

X1 1pcs

1 → 2

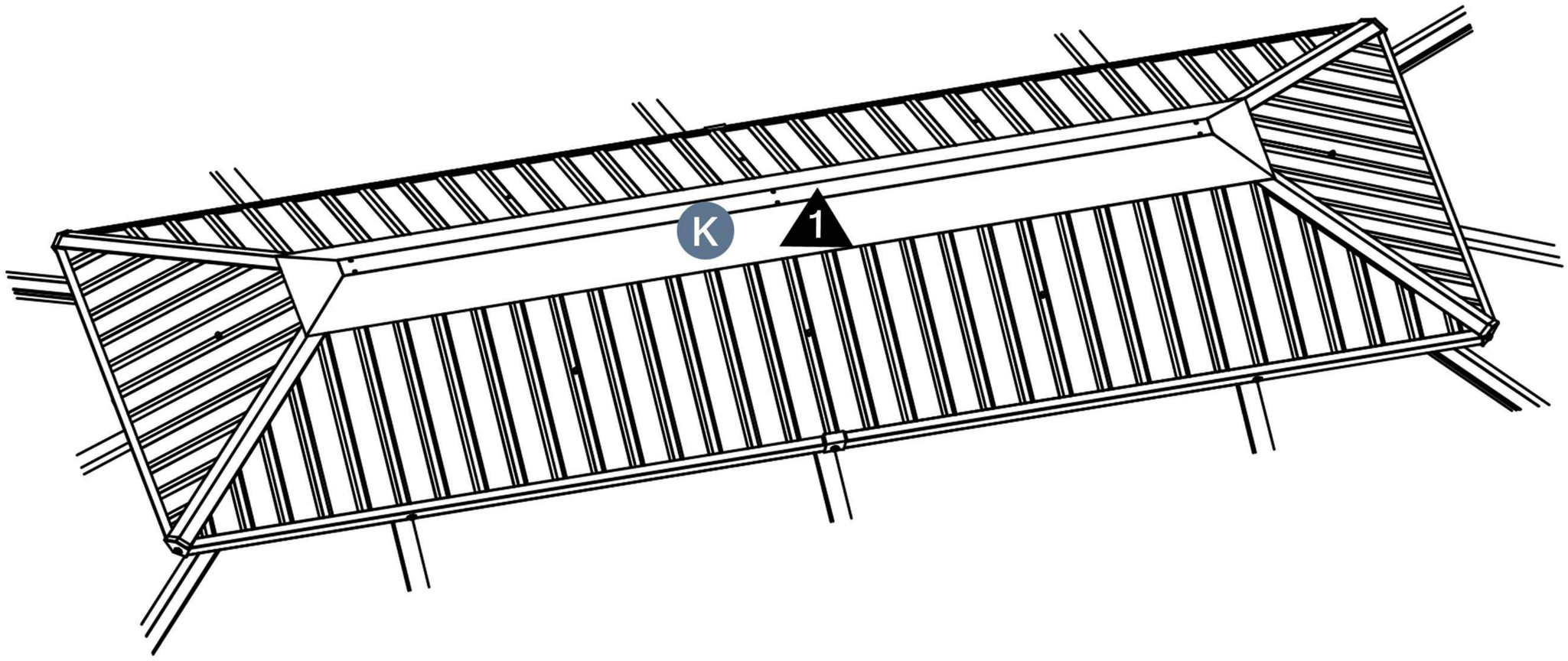

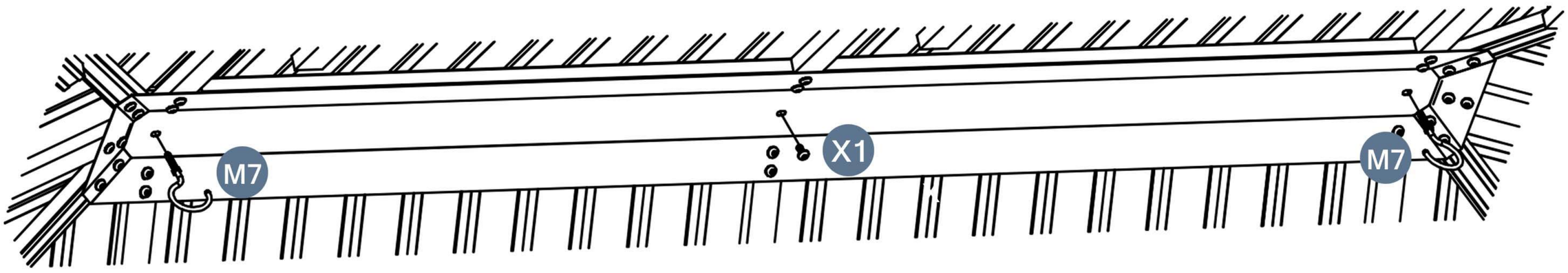

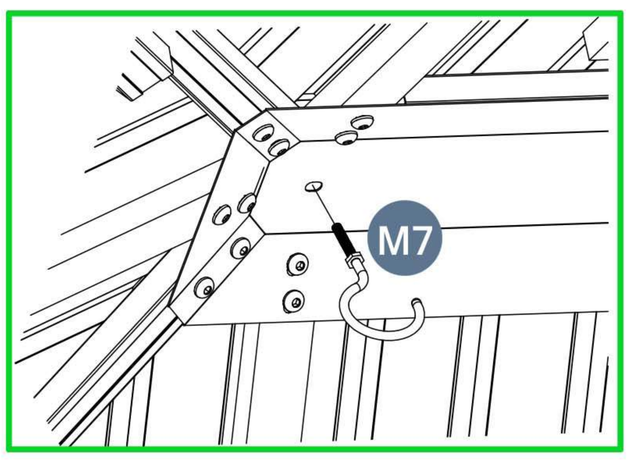

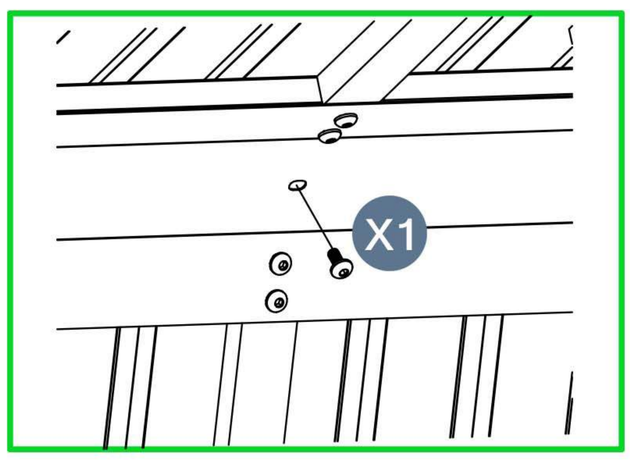

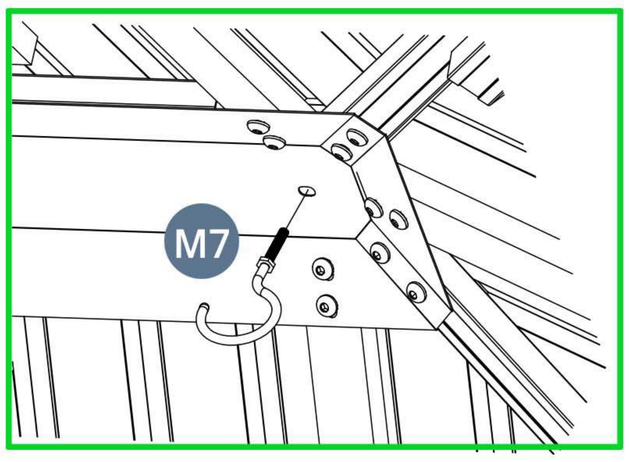

2

STEP31

Parts required

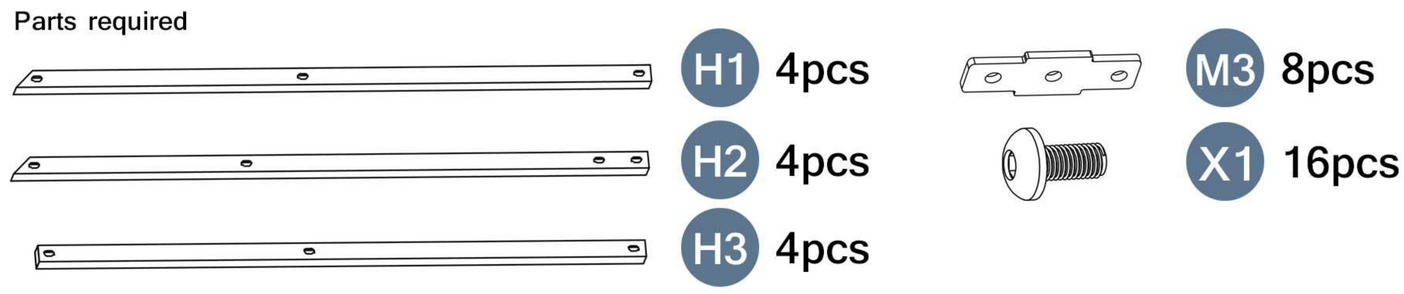

Please place it as shown in the picture before proceeding with the installation.
Pay attention to the direction of the pipe and M3, and do not install them incorrectly.

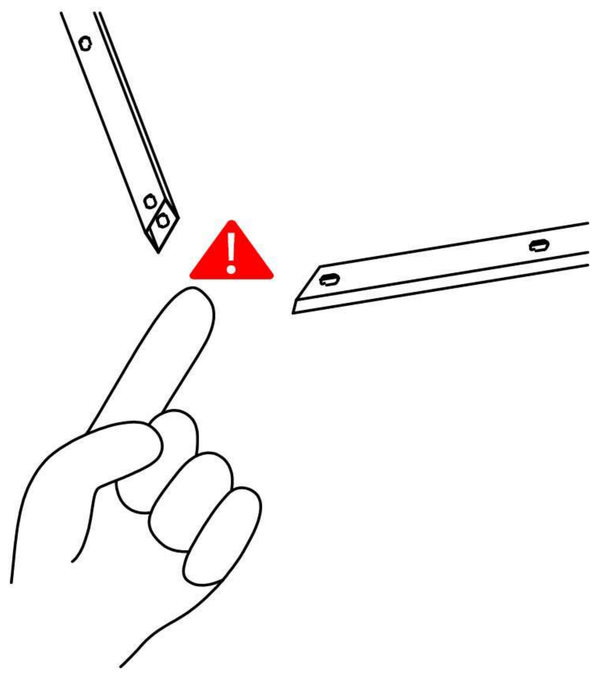

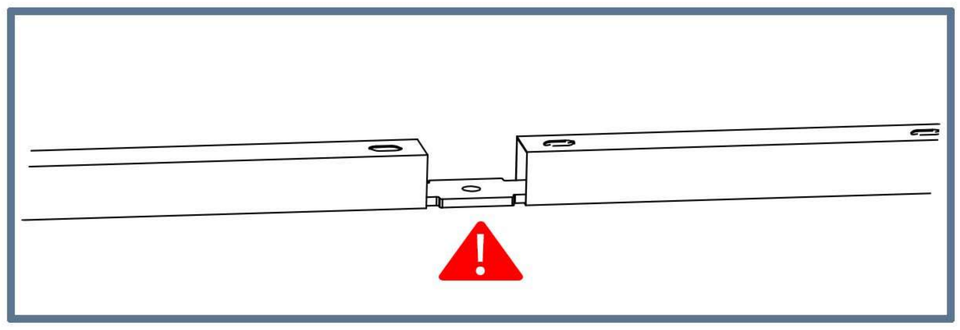

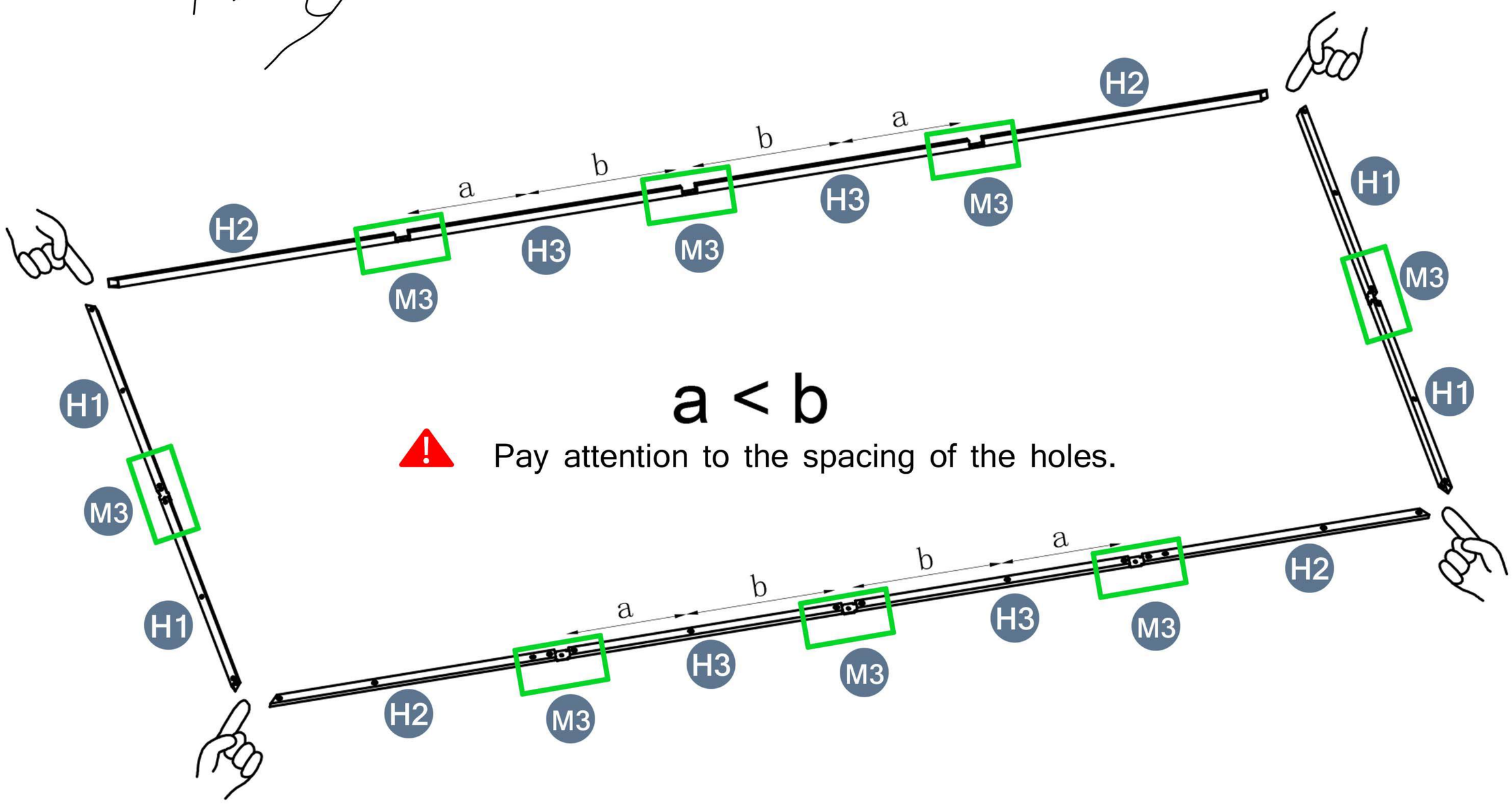

a < b

Pay attention to the spacing of the holes.

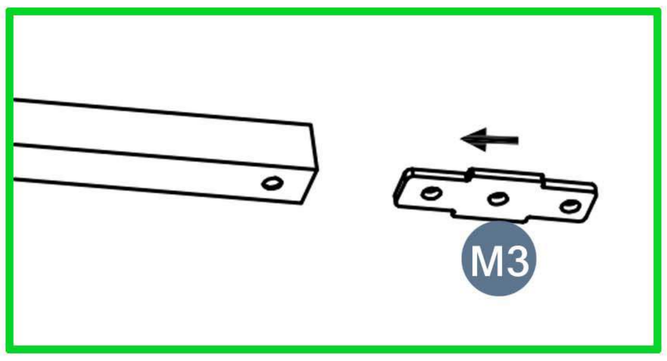

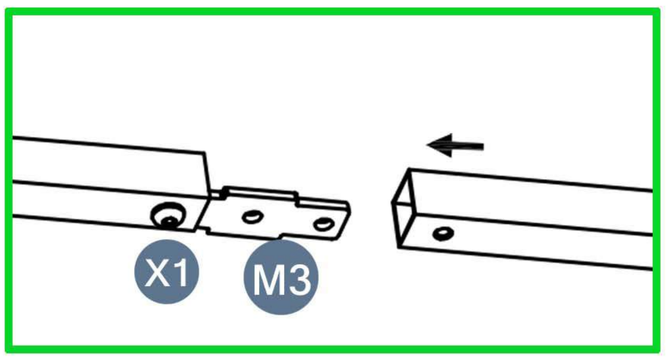

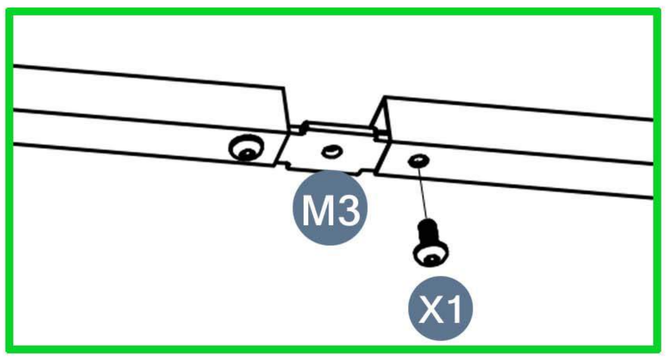

STEP32

Parts required

X5 4pcs

X1 4pcs

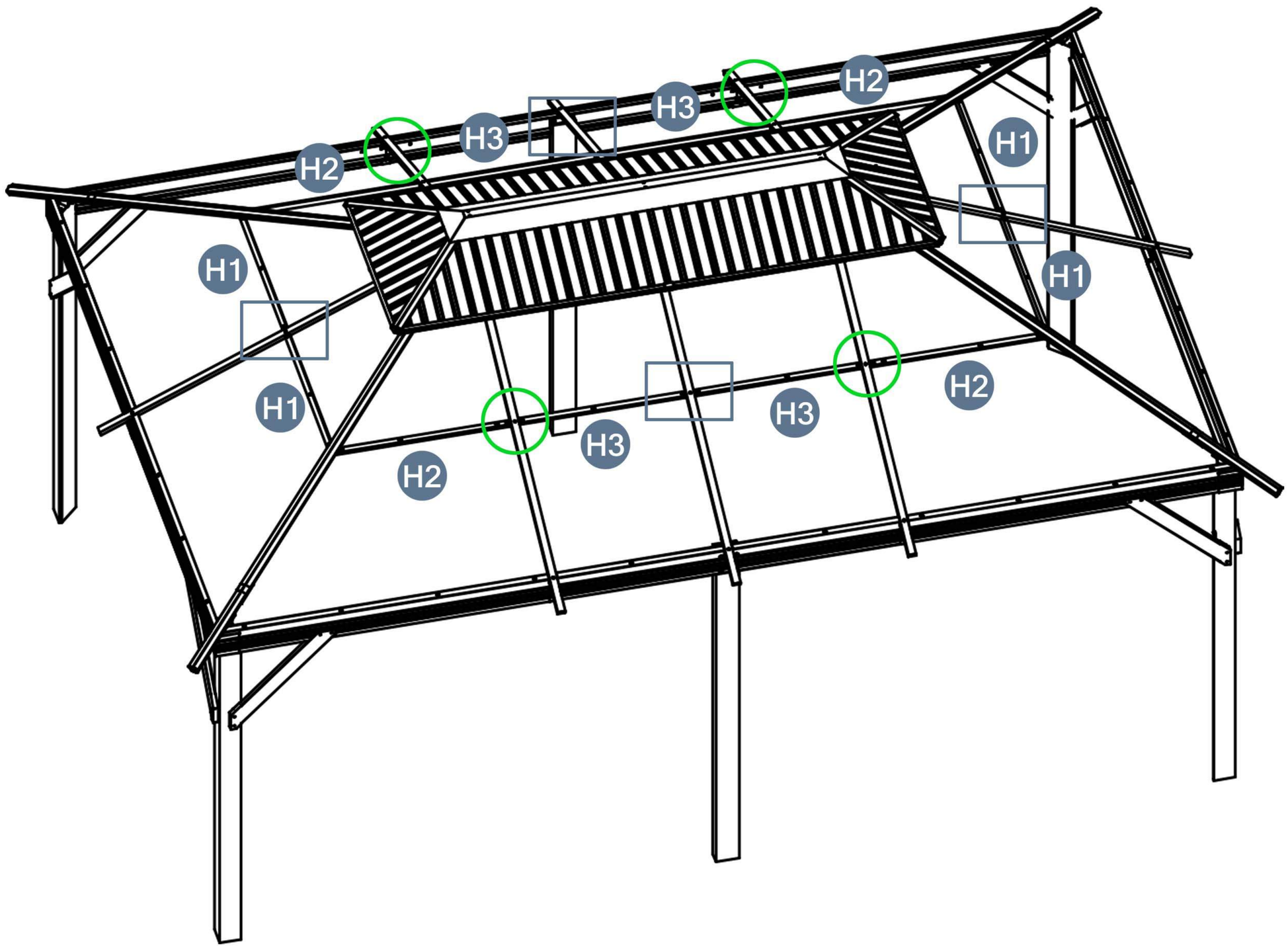

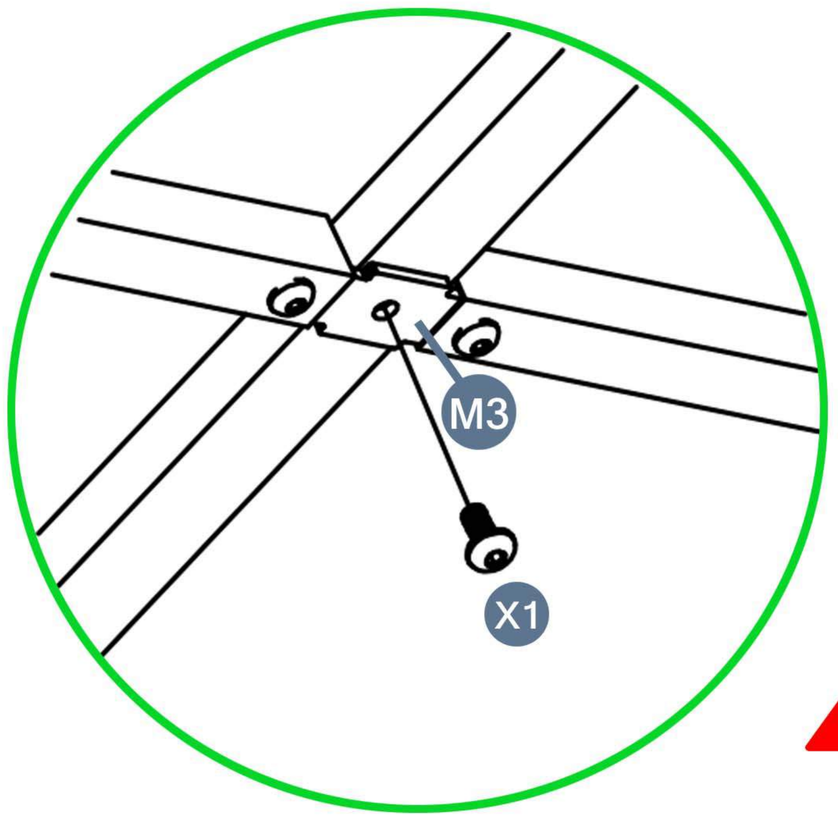

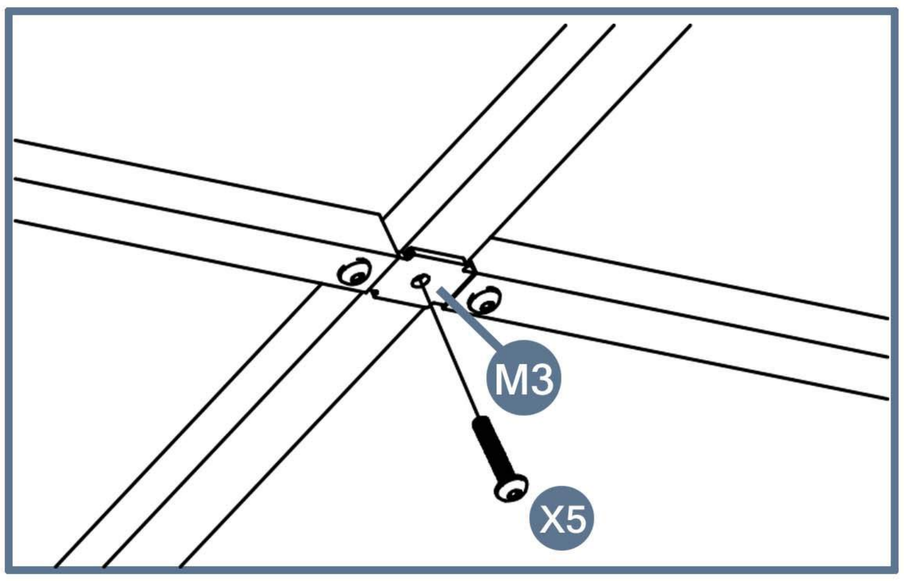

Please keep the X5 nut safe; it will be needed later.

STEP33

Parts required

M4 4pcs

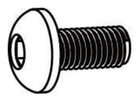

X1 12pcs

1 → 2 → 3

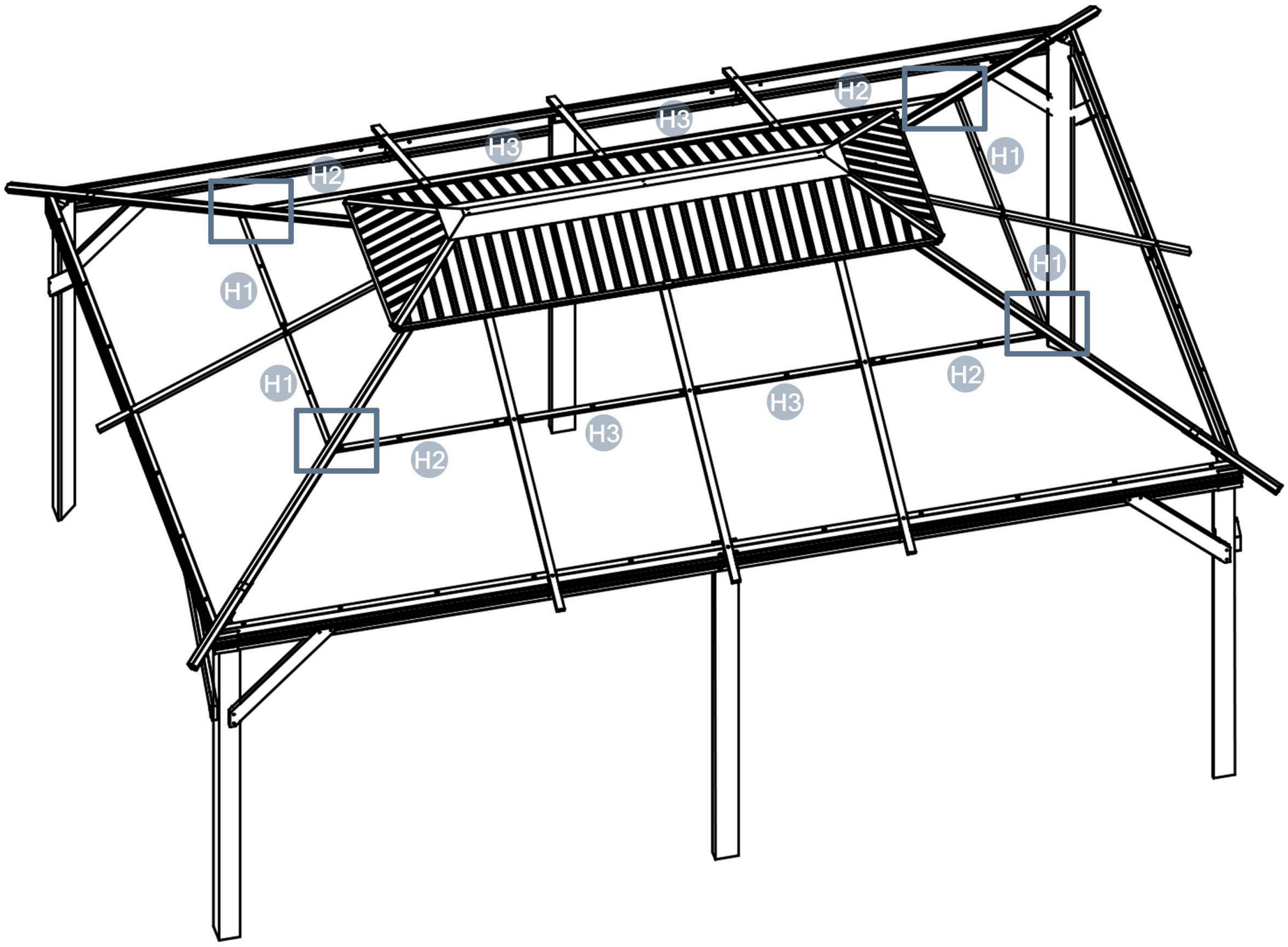

⚠ Pay attention to the installation direction of the M4.

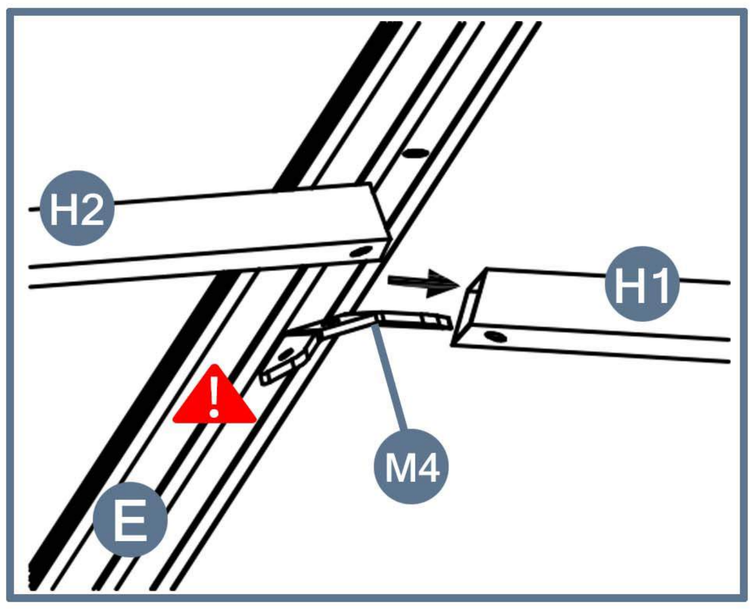

1

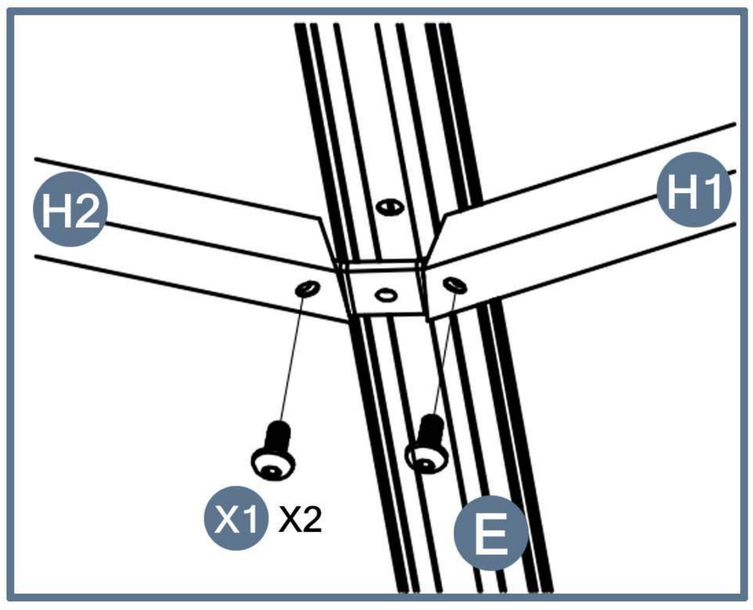

2

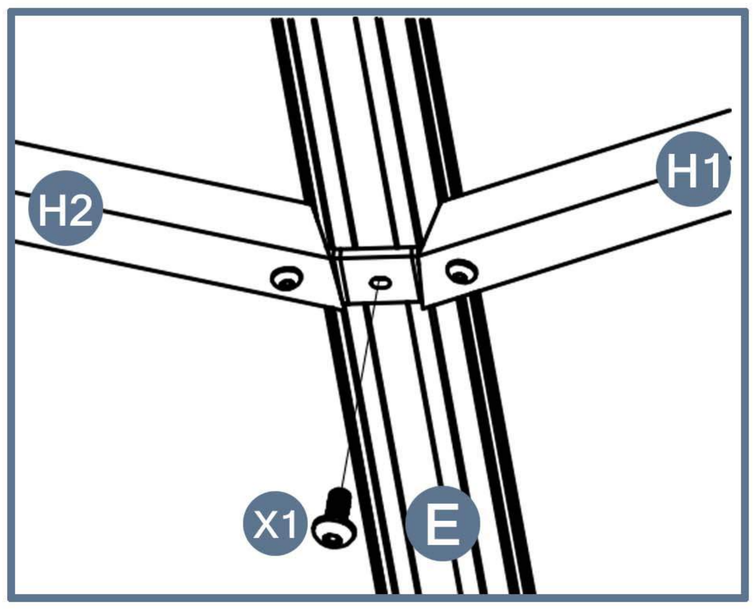

3

STEP34

Parts required

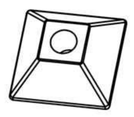

M5 4pcs

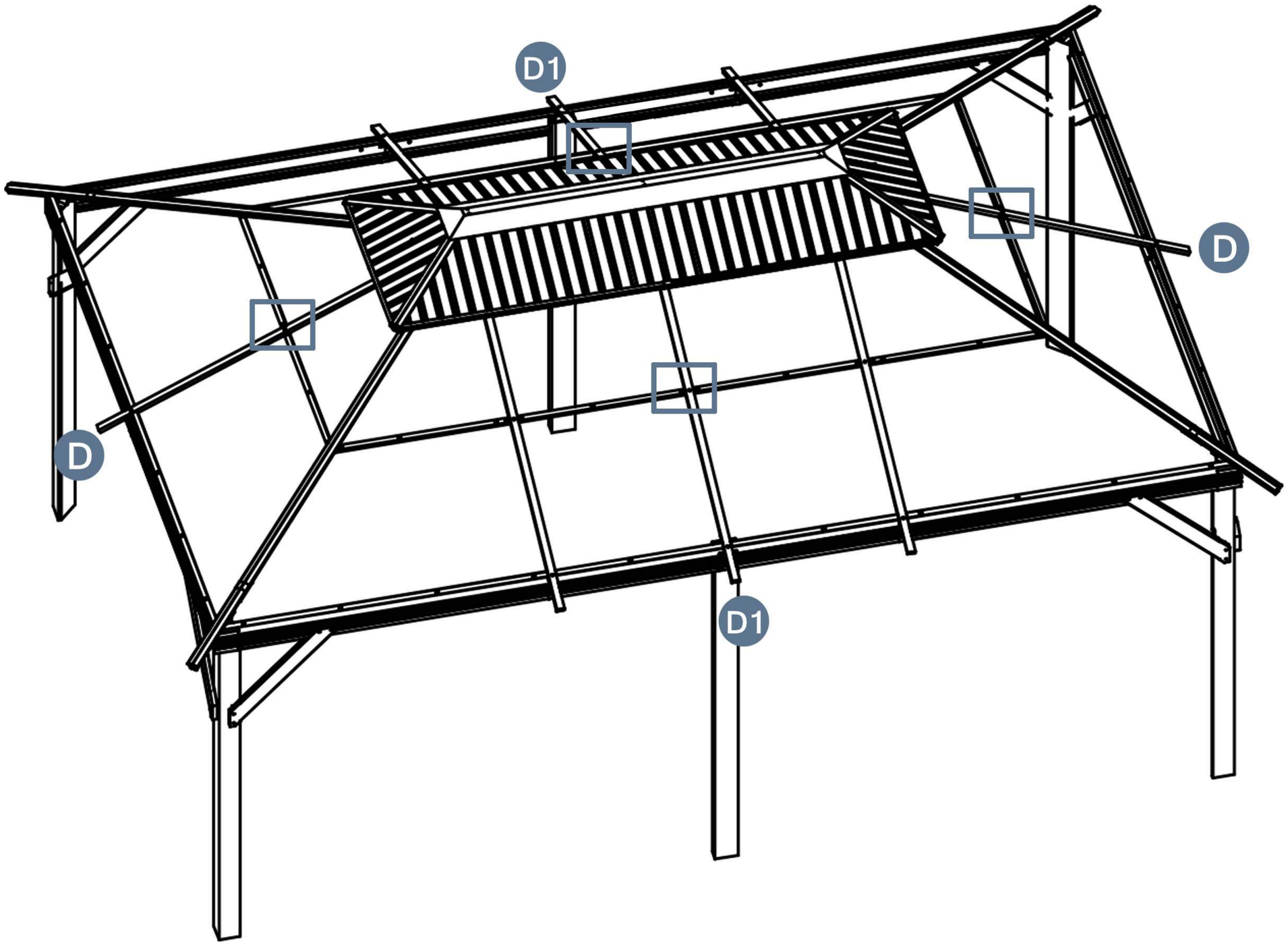

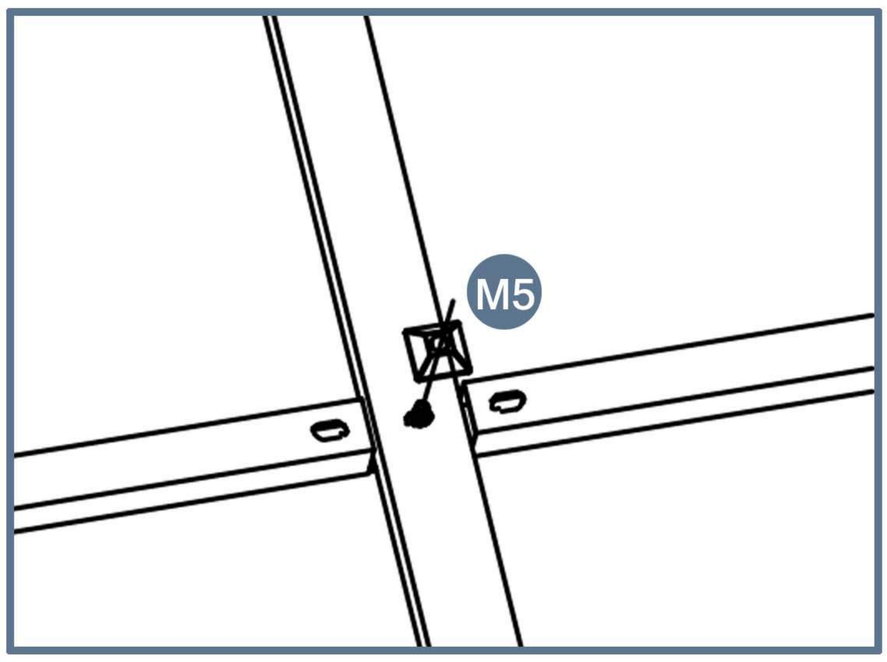

To prevent the loss of M2 and M1
we mounted the M2 and M1 on top of the E1/D and D1 ahead of time

Before installing step 35, please remove the 4 M2's
and 8 M1's from the part E1/D and D1. (Reinstall them during step 37/step 38) .

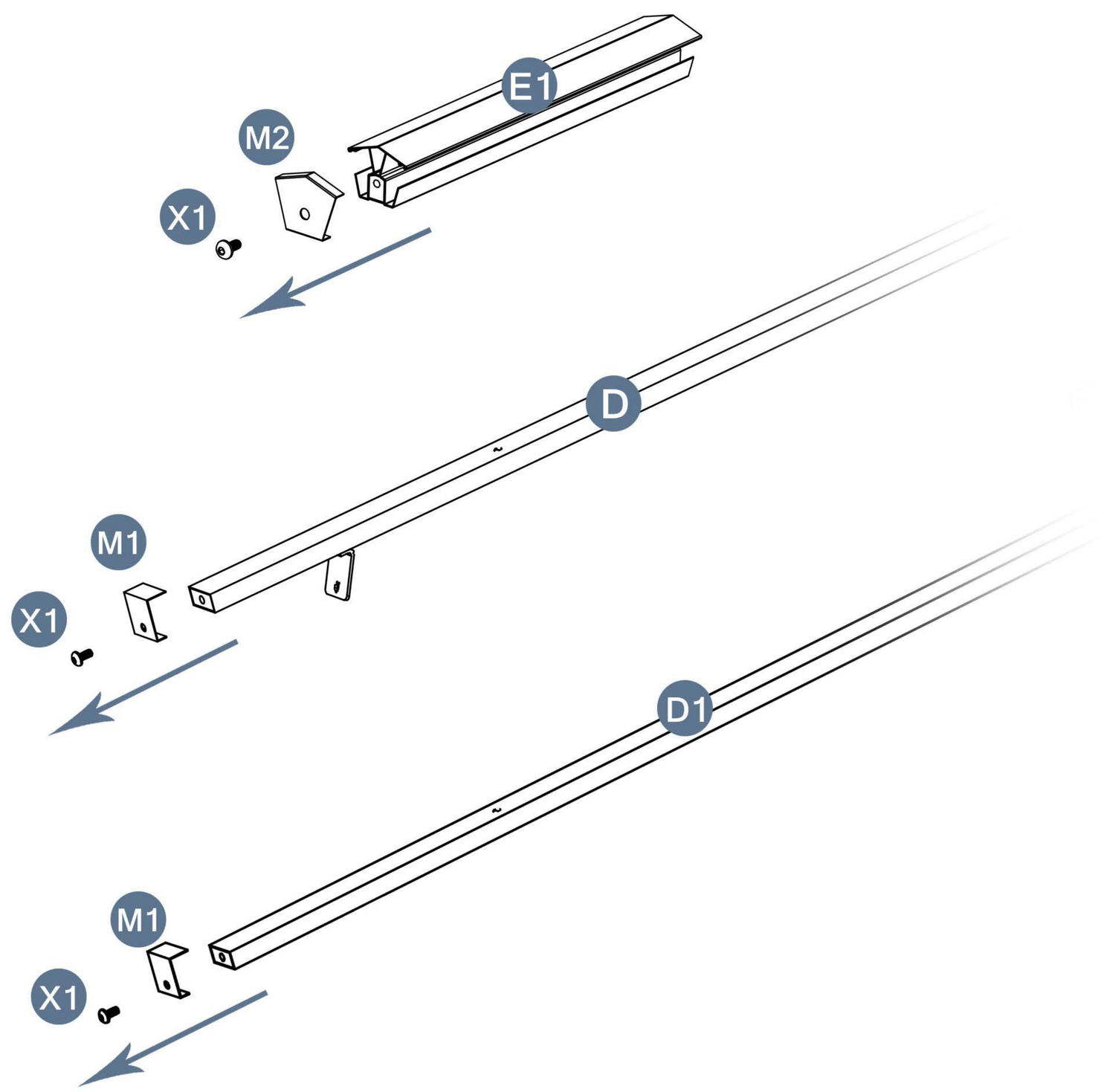

STEP35

Parts required

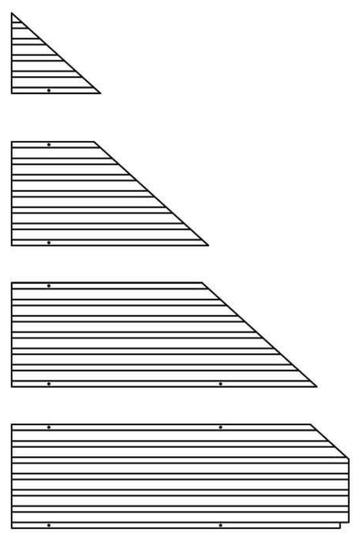

O1	2pcs	V4	2pcs	M5	16pcs
O2	2pcs	V3	2pcs	X3	2pcs
O3	2pcs	V2	2pcs	X4	12pcs
O4	2pcs	V1	2pcs	X5	4pcs

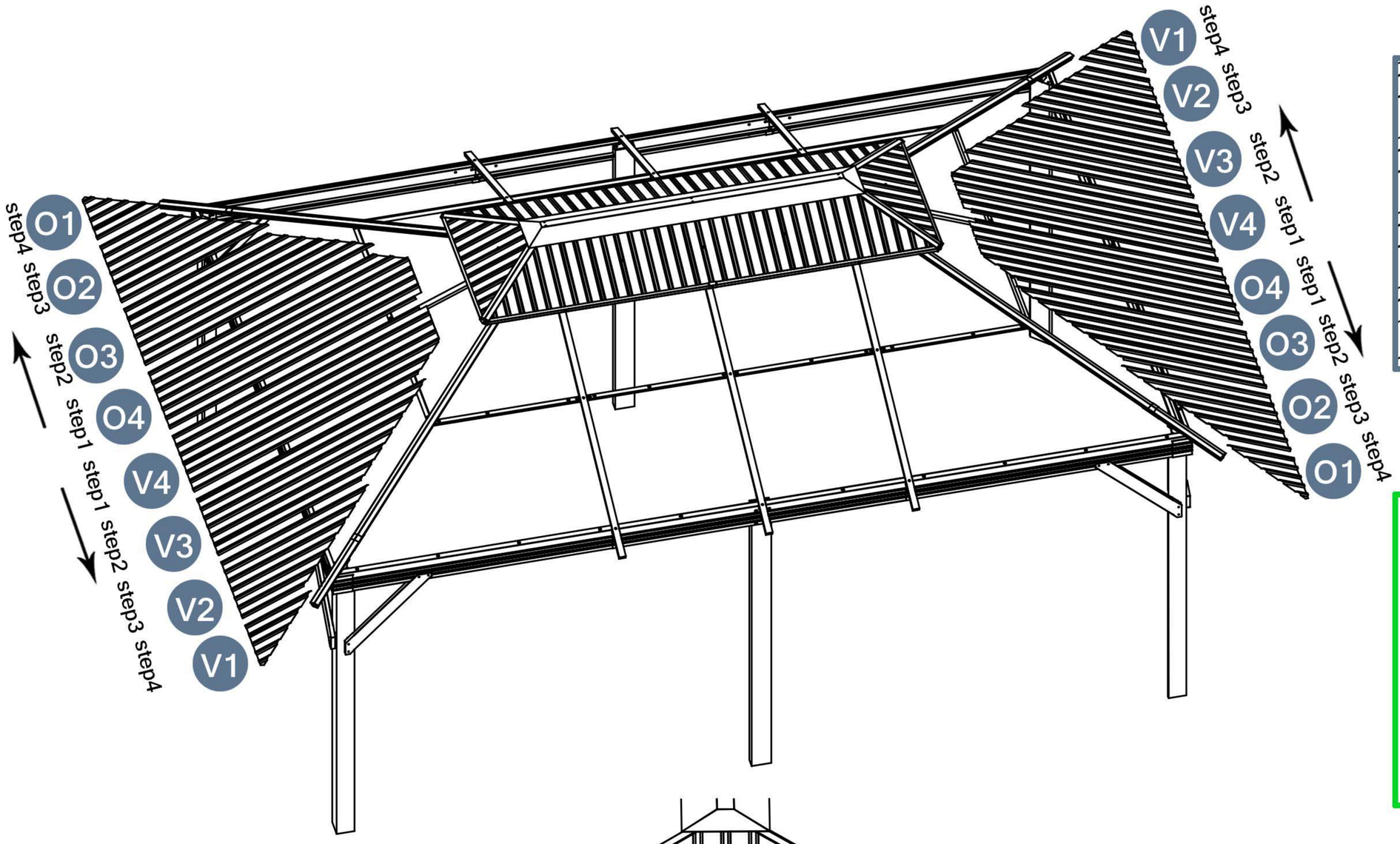

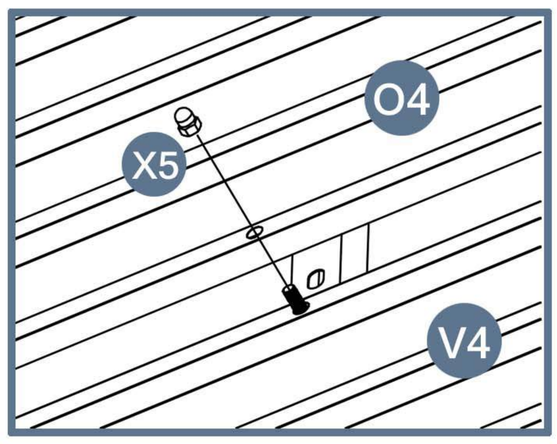

1

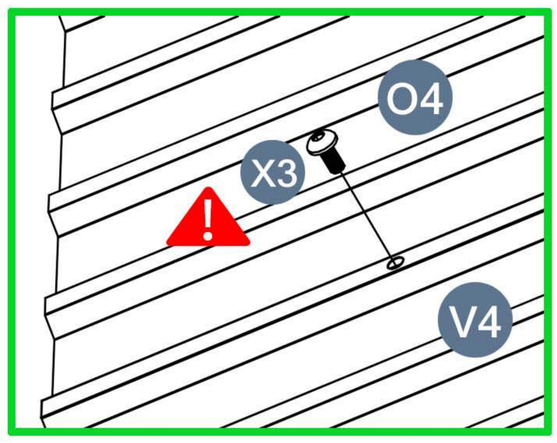

2

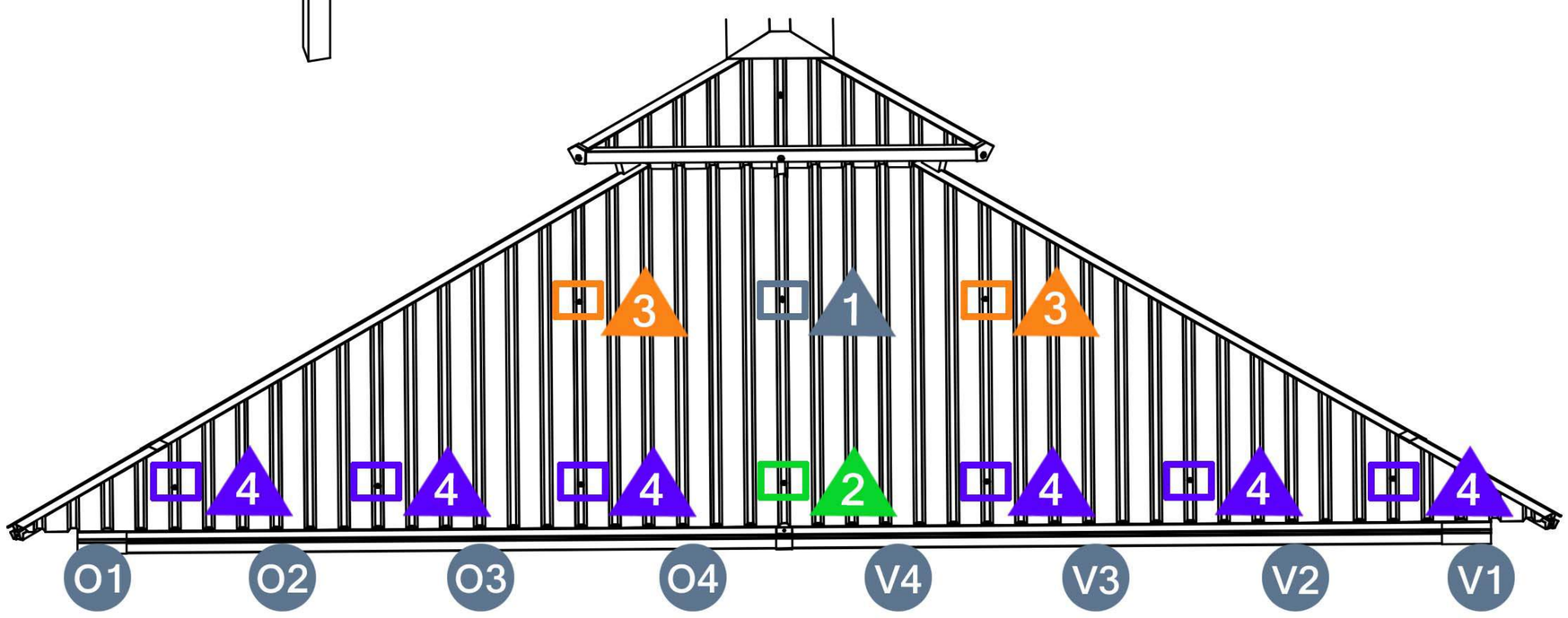

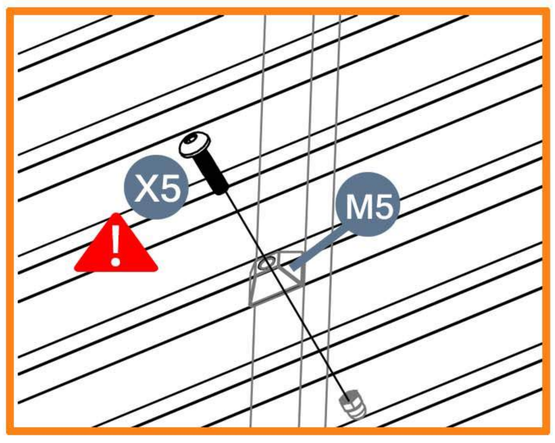

3

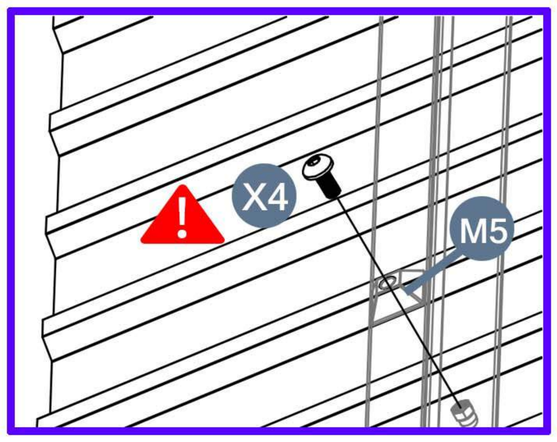

4

Please install the screws according to the corresponding color.
Pay attention to the different screws and their installation directions.

3 4 M5 is placed under the iron plate.

2 No need for M5 .

STEP36

Parts required

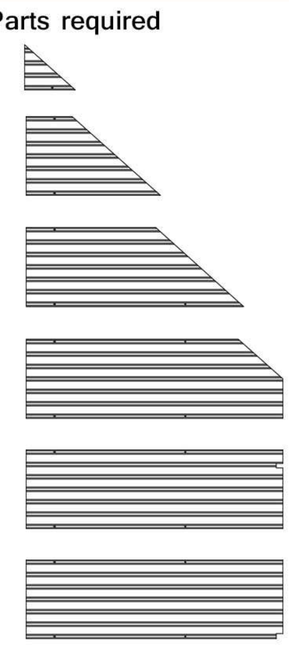

N	2pcs	Y5	2pcs	M5	32pcs
N1	2pcs	Y4	2pcs	X3	2pcs
N2	2pcs	Y3	2pcs	X4	20pcs
N3	2pcs	Y2	2pcs	X5	12pcs
N4	2pcs	Y1	2pcs		
N5	2pcs	Y	2pcs		

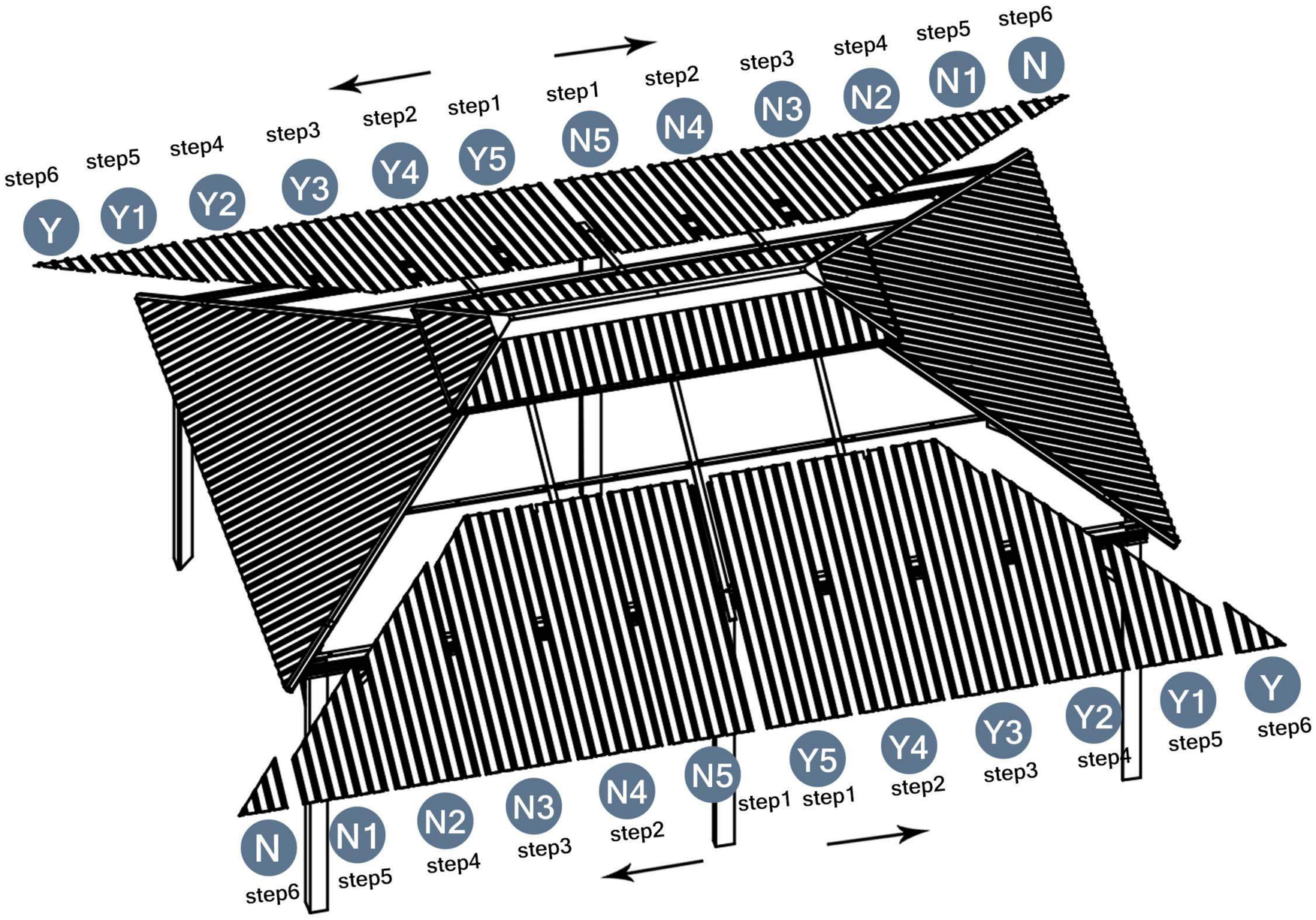

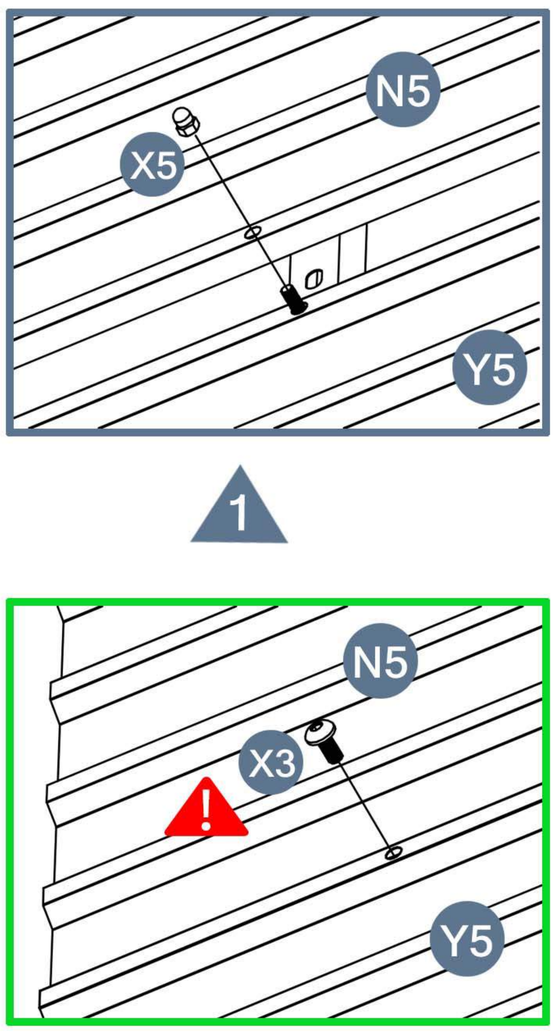

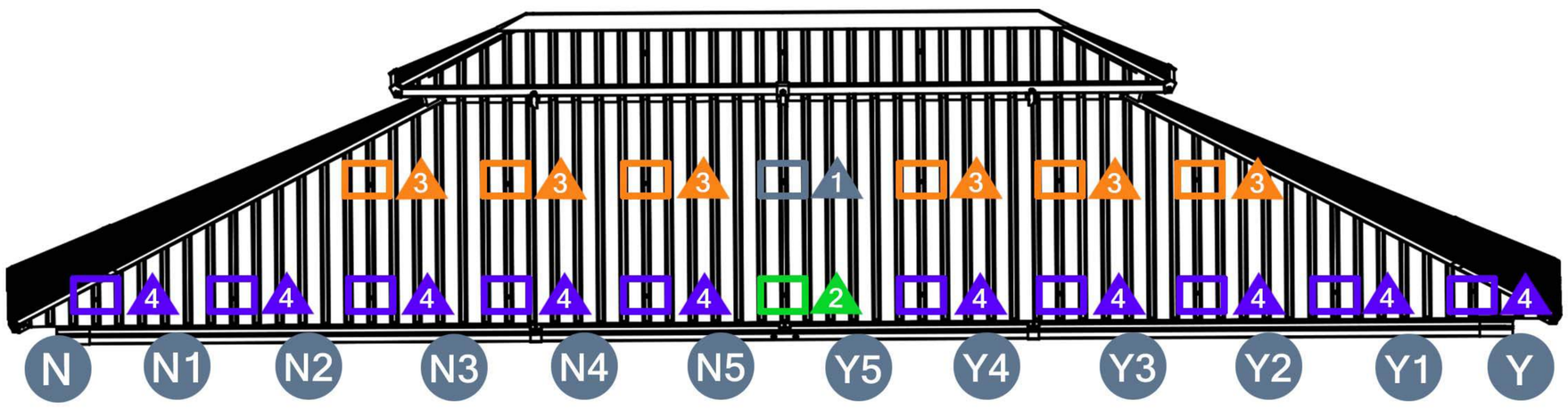

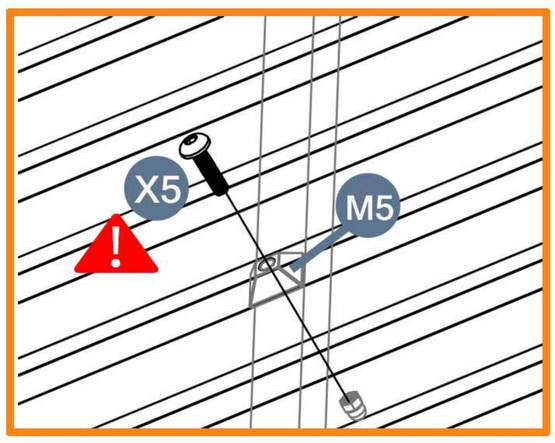

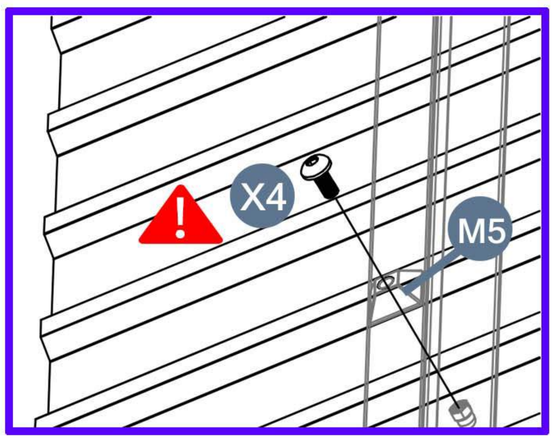

Please install the screws according to the corresponding color.
Pay attention to the different screws and their installation directions.

3 4 M5 is placed under the iron plate.

2 No need for M5 .

STEP37

Parts required

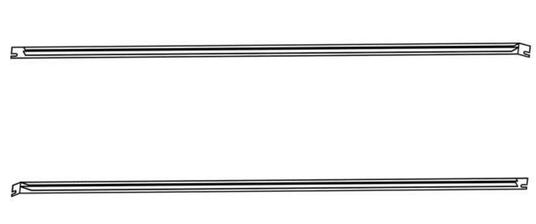

G1 2pcs

M2 4pcs

X1 6pcs

G2 2pcs

M1 2pcs

1 → 2 → 3 → 4

To make installation easier later, please do not tighten the M2.

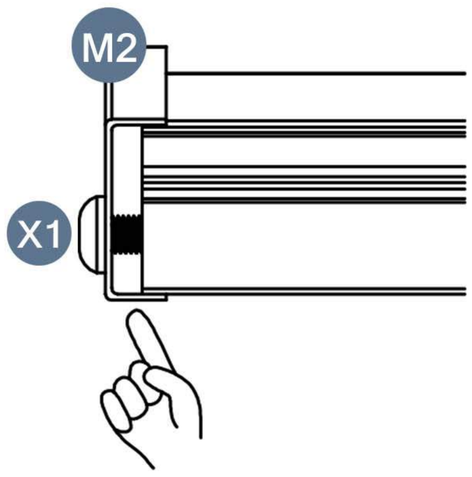

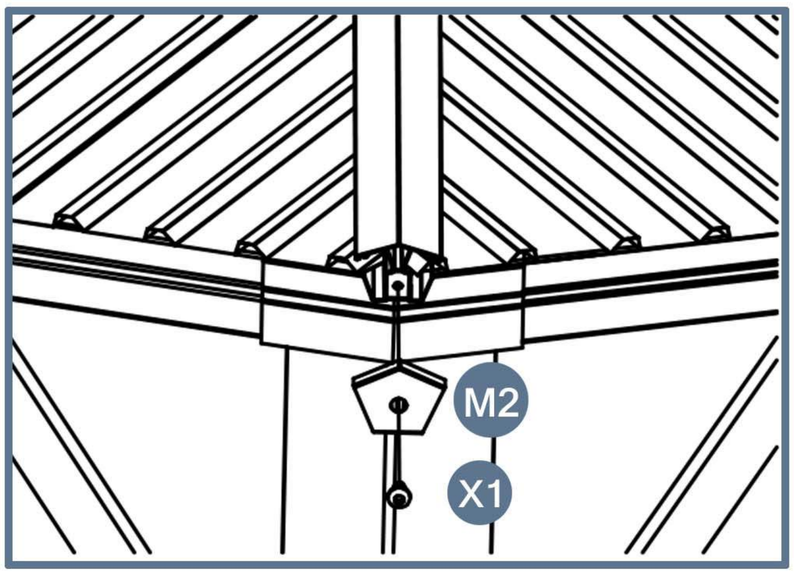

1

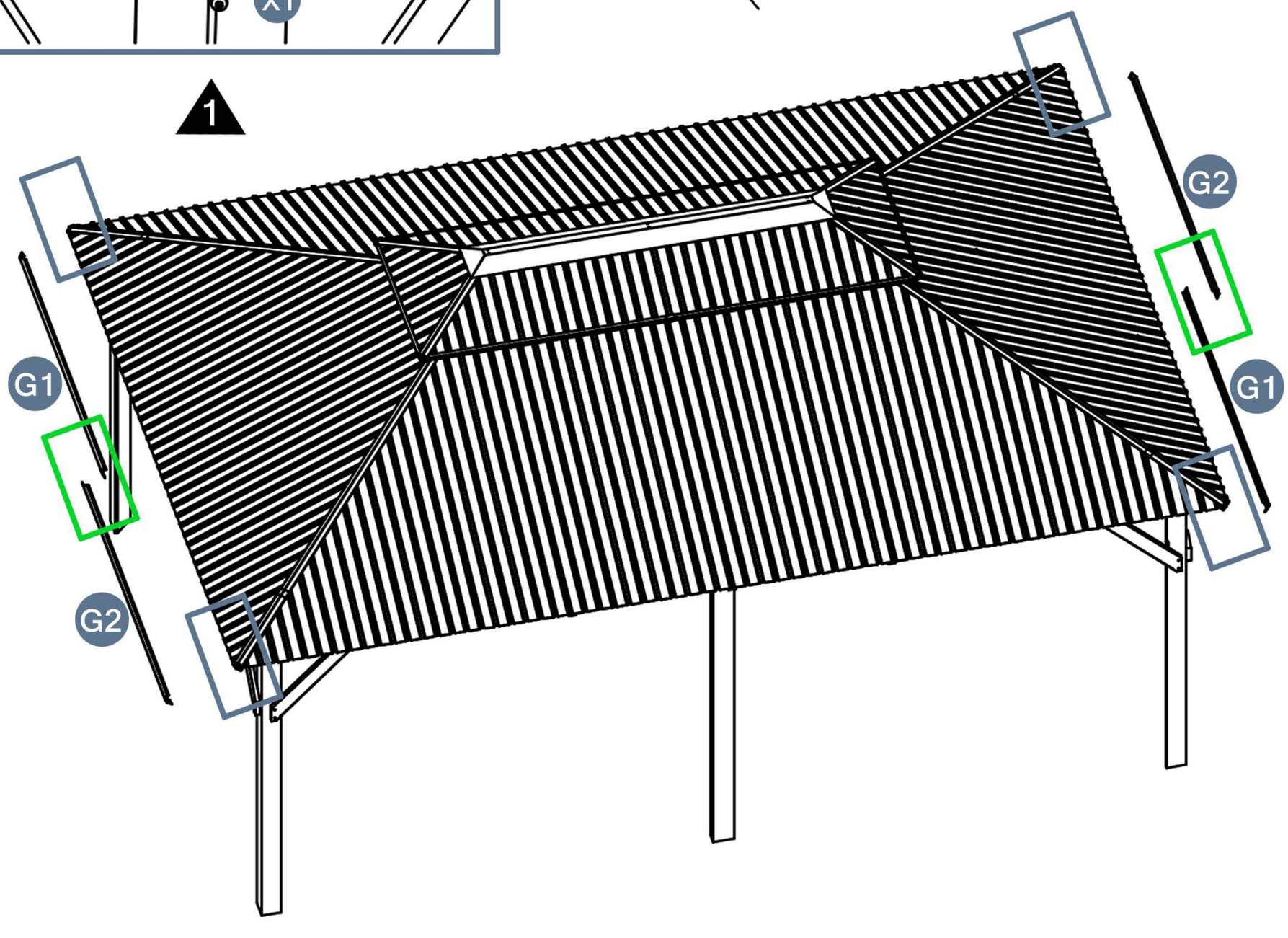

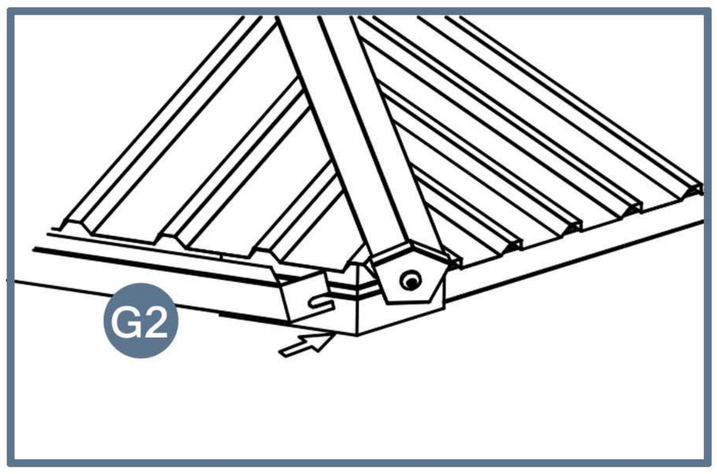

2

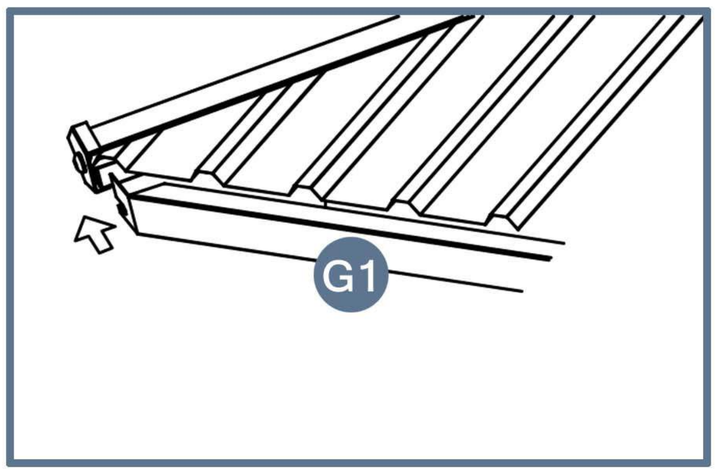

3

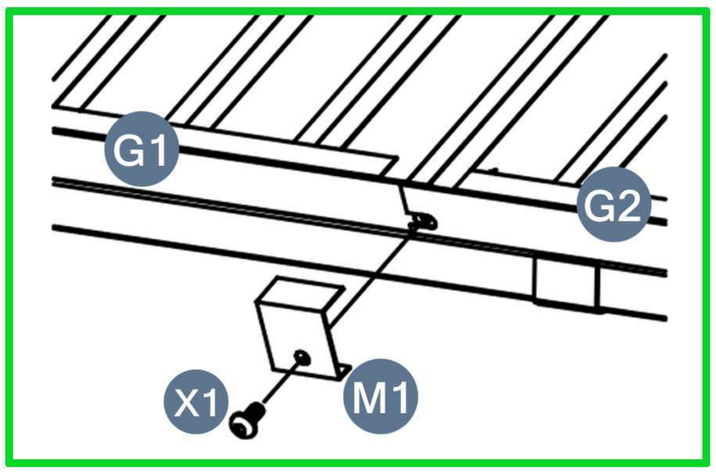

4

STEP38

Parts required

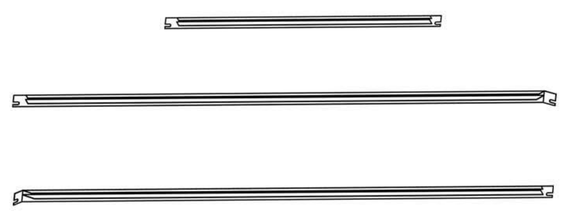

G 4pcs

G1 2pcs

G2 2pcs

M1 6pcs

X1 6pcs

1 → 2 → 3

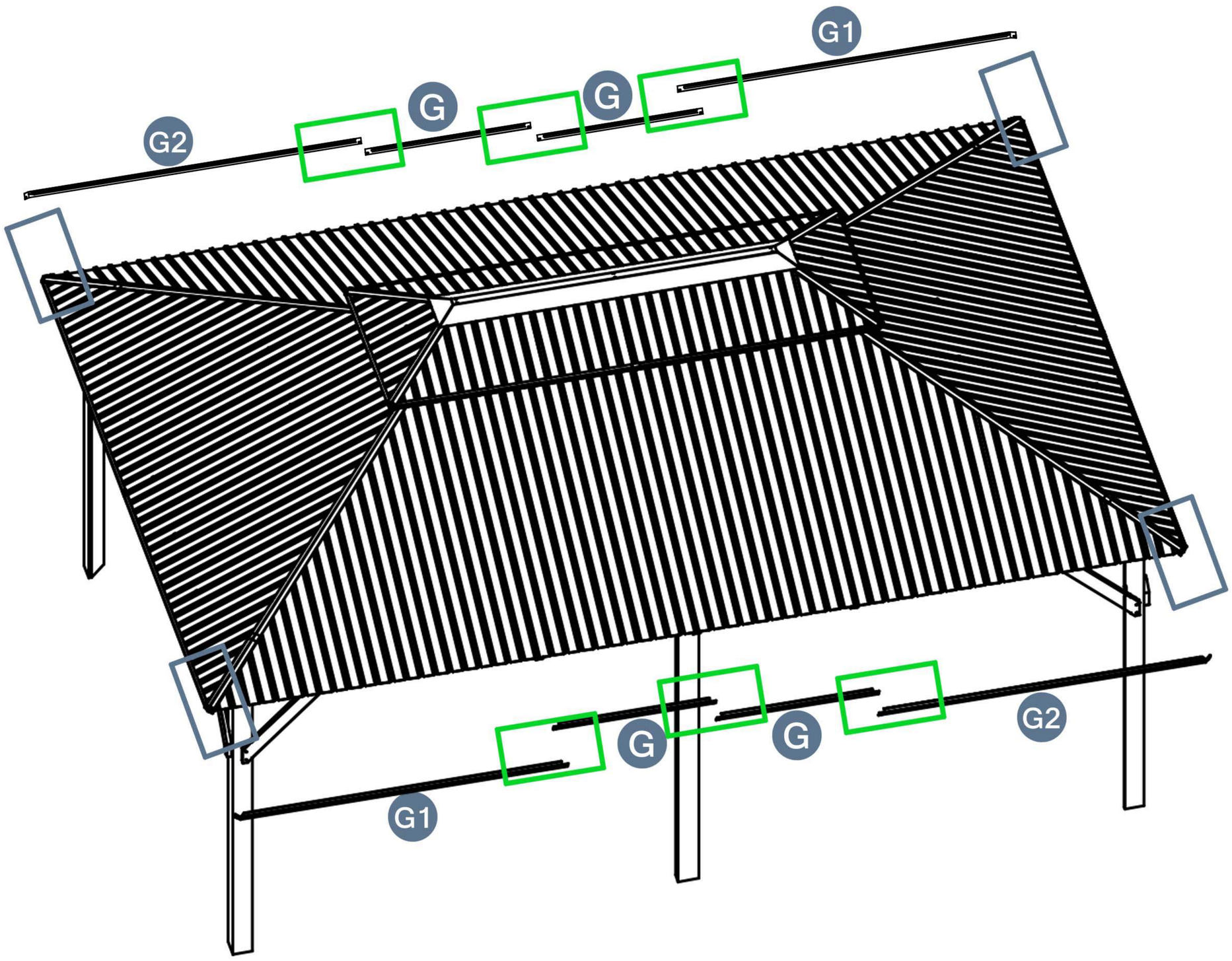

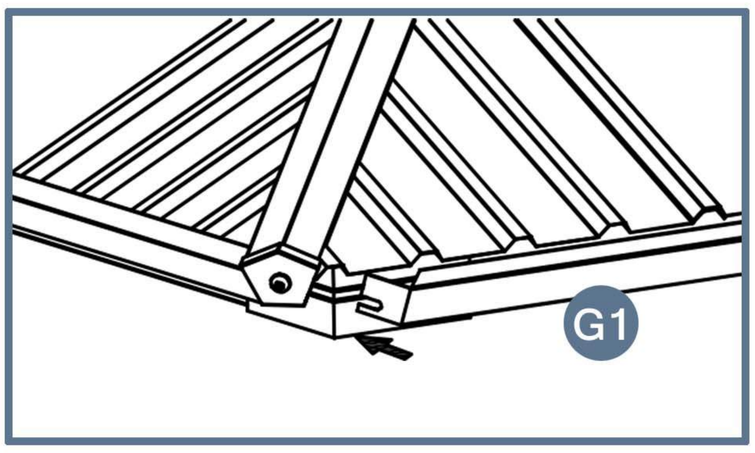

1

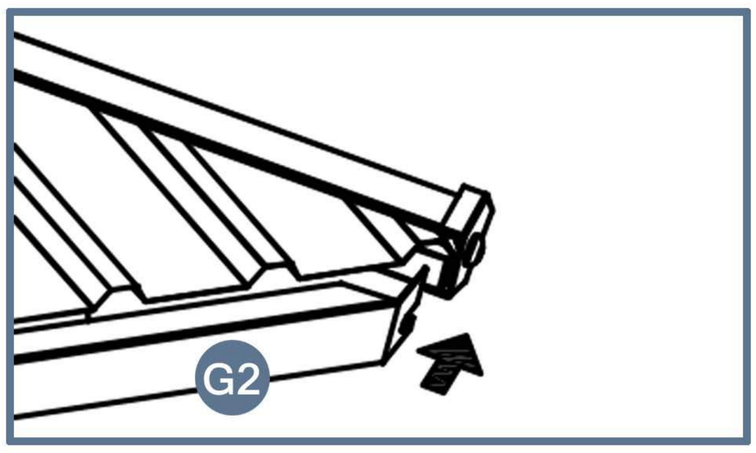

2

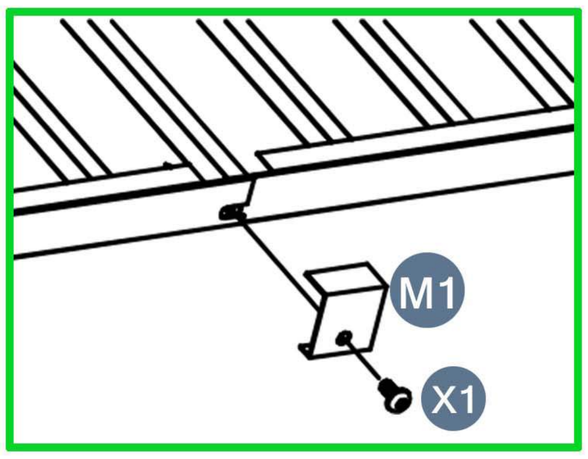

3

After installation, please check if each screw is tightened.

STEP39

Parts required

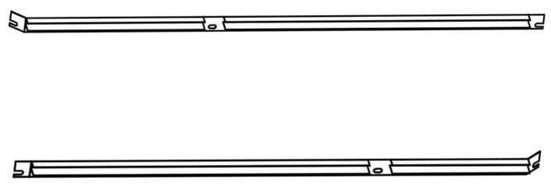

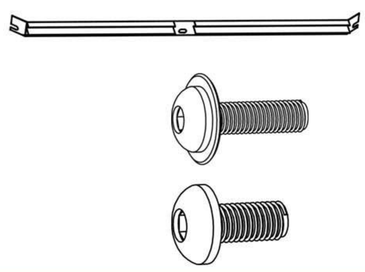

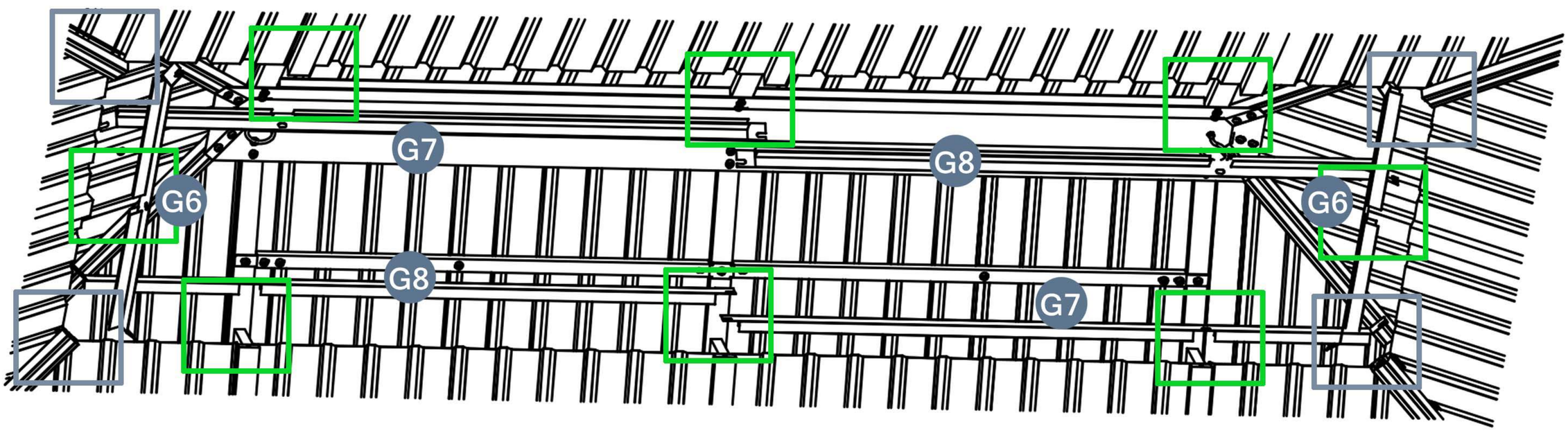

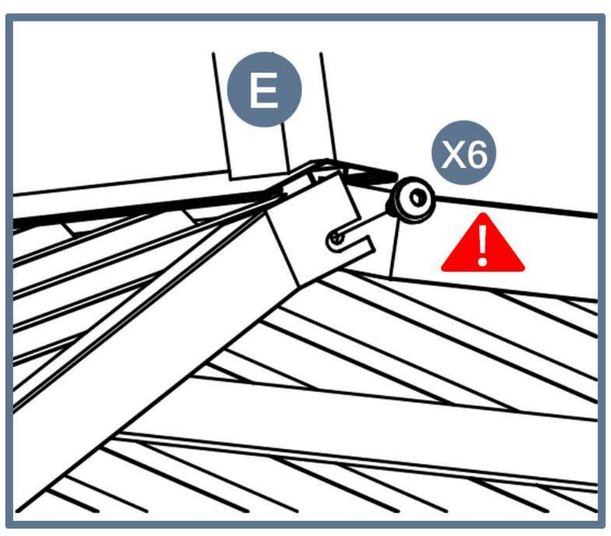

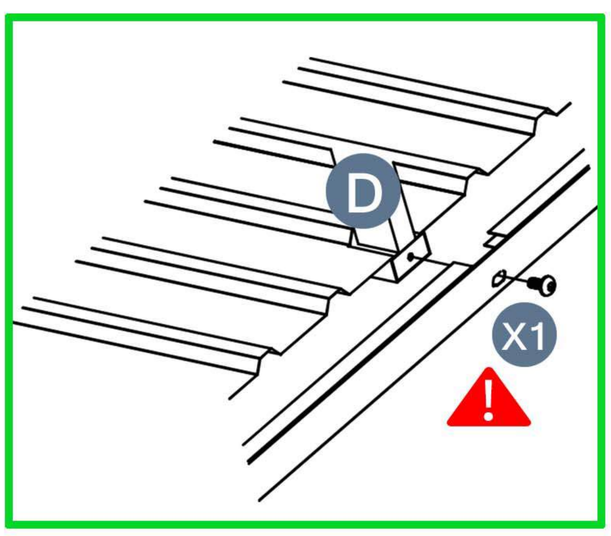

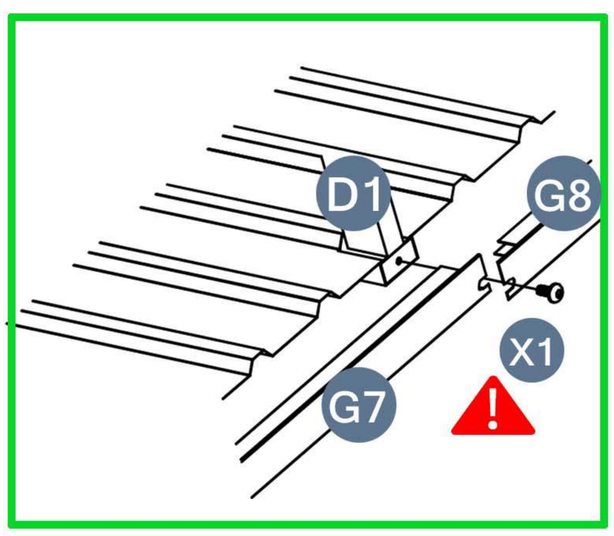

Pay attention to the different screws
Install from the inside, with edging on the top.

STEP40

Parts required

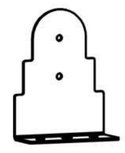

L 14pcs

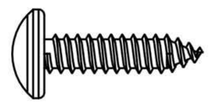

X7 28pcs

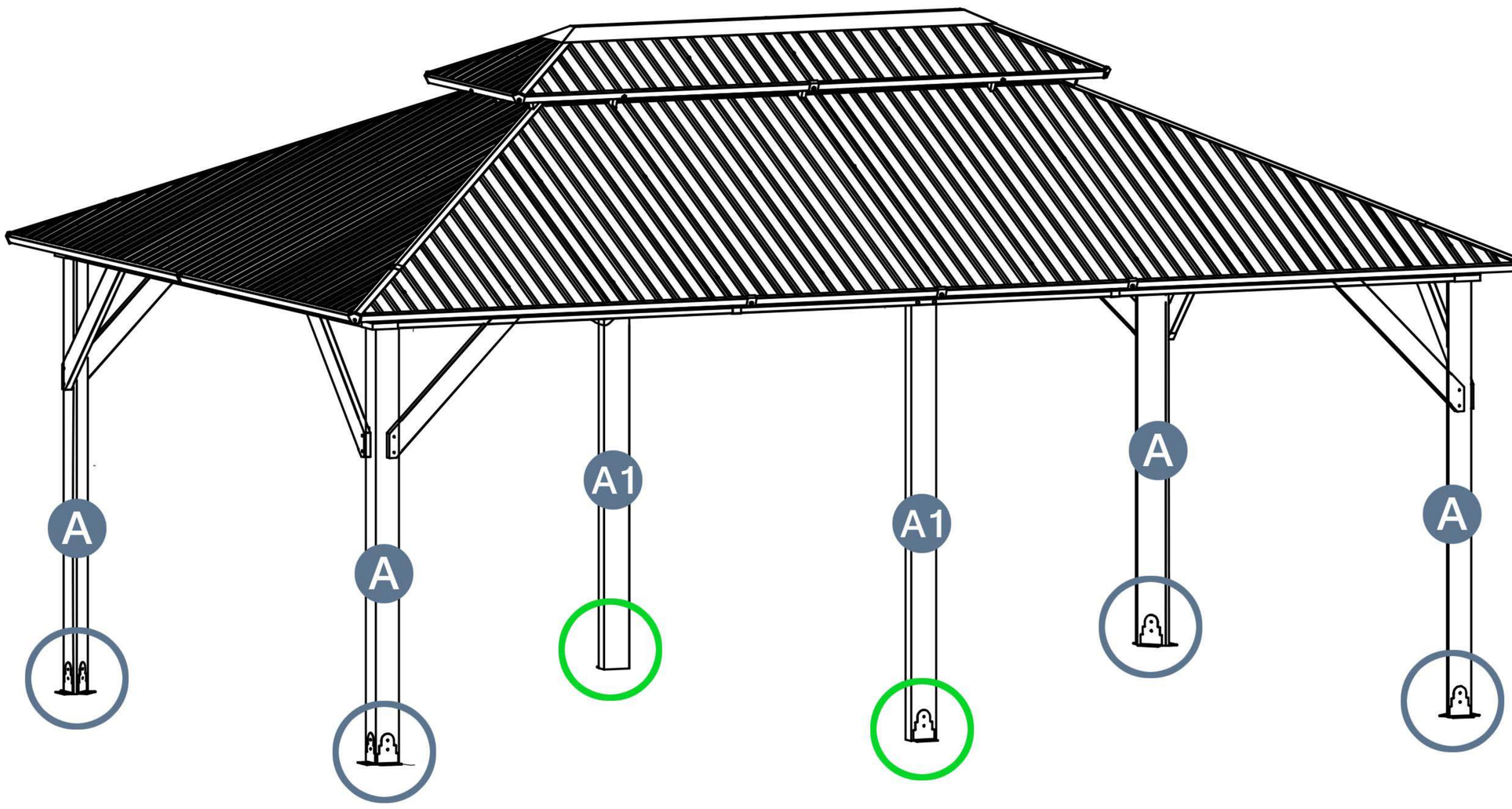

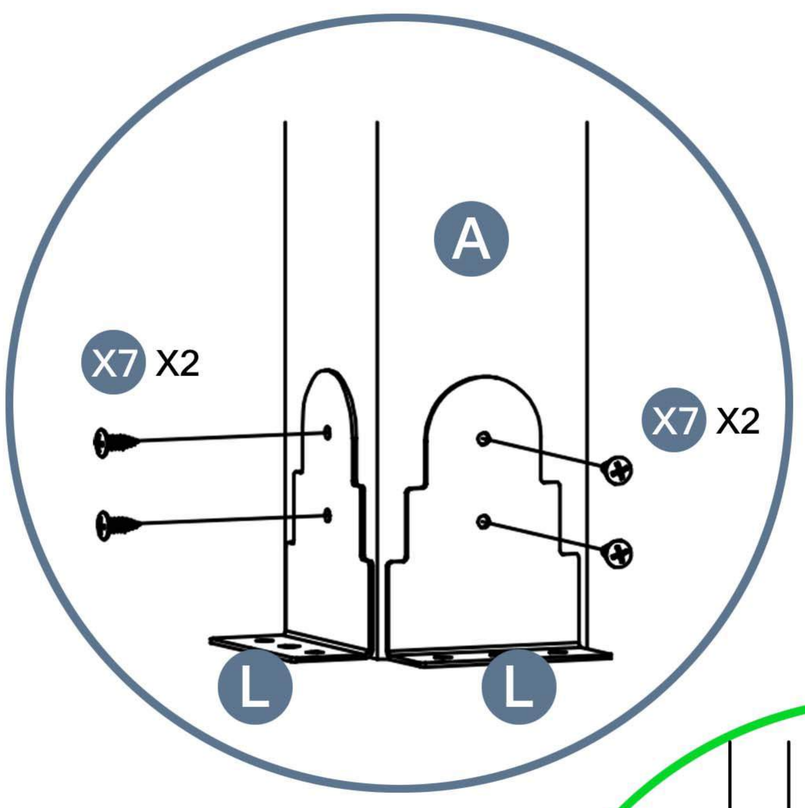

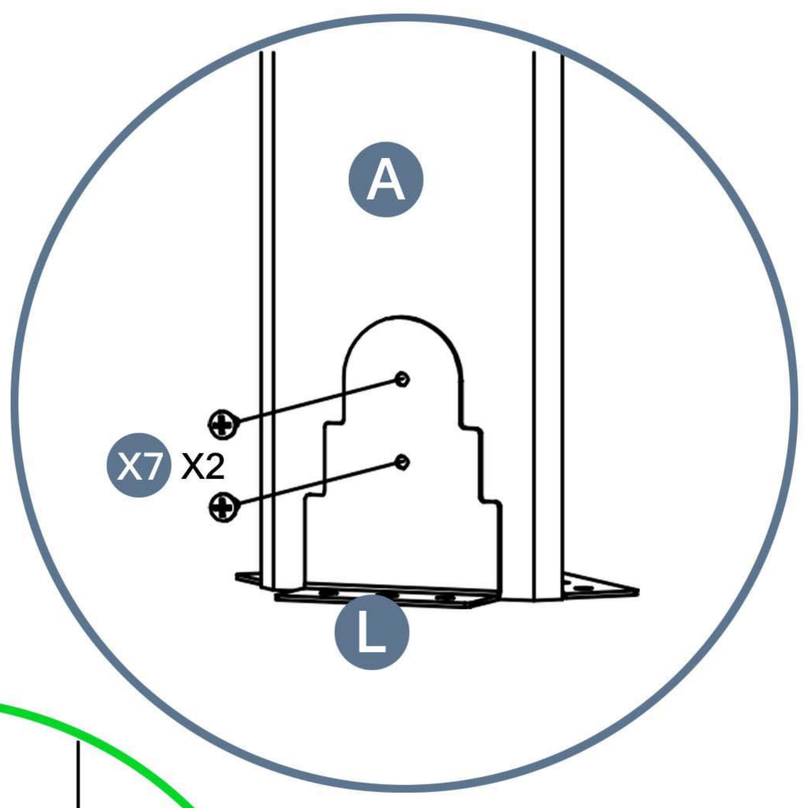

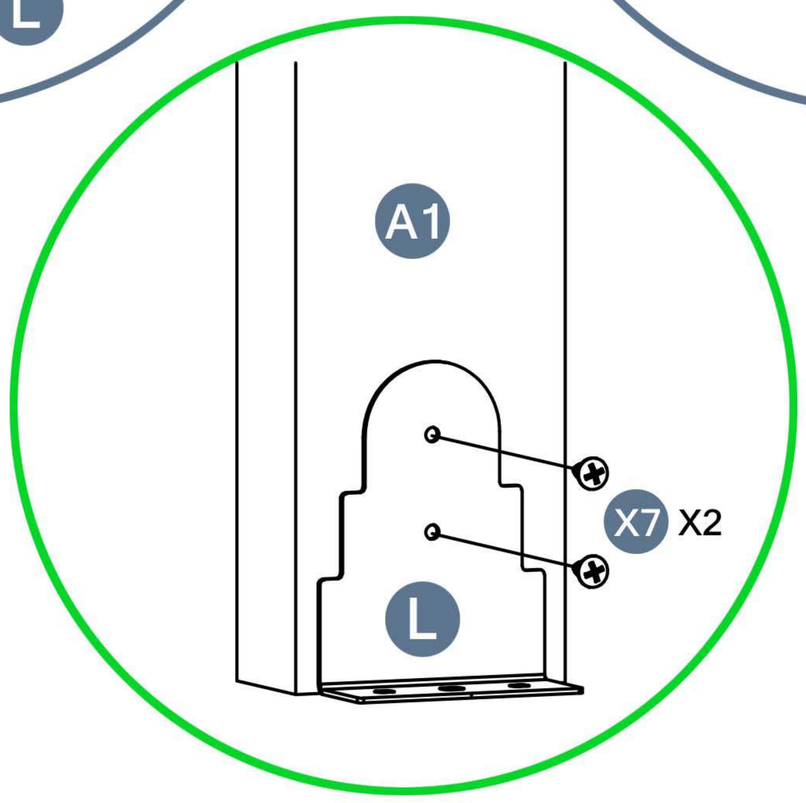

STEP41

Parts required

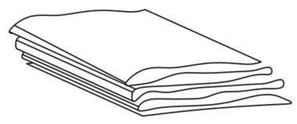

Z 1pcs

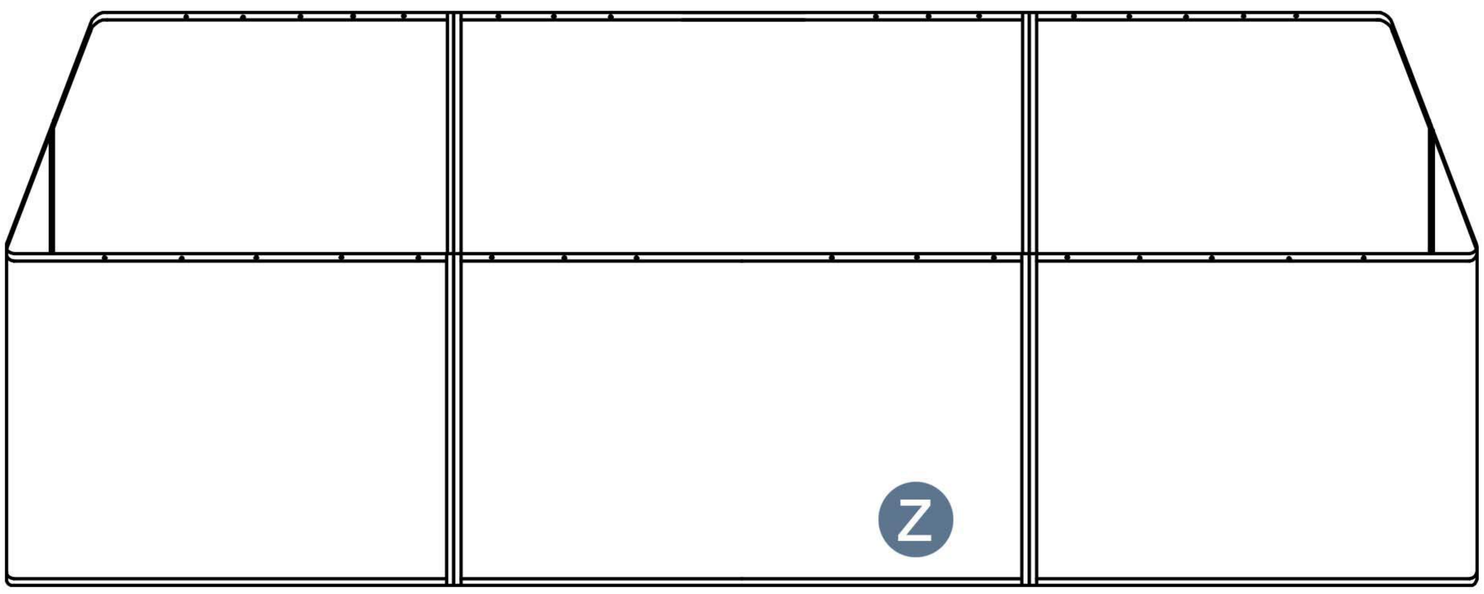

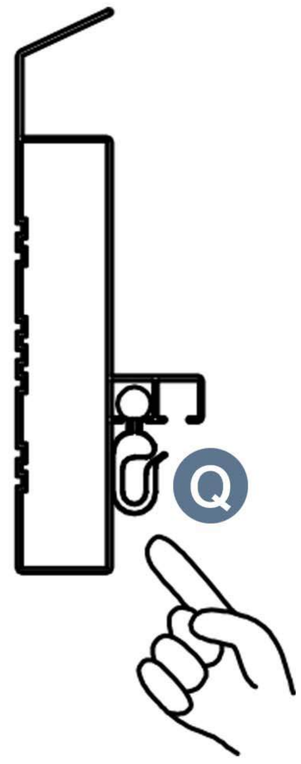

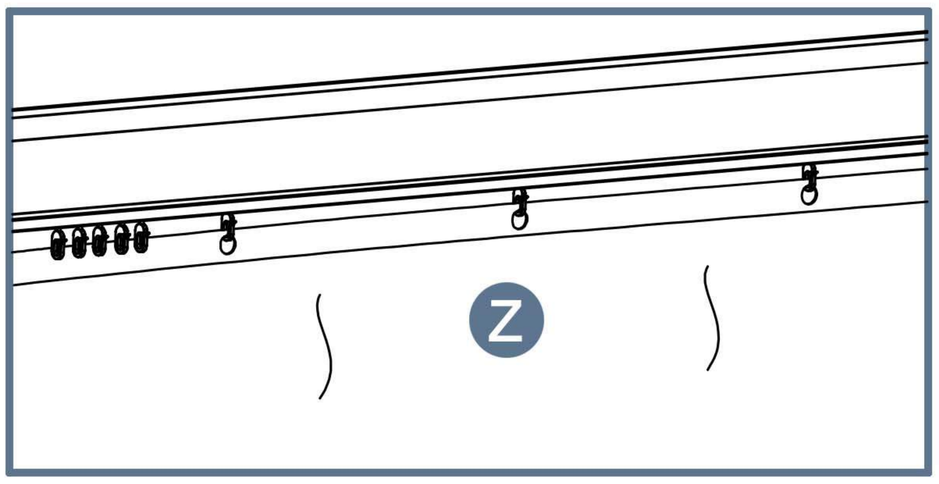

STEP42

Parts required

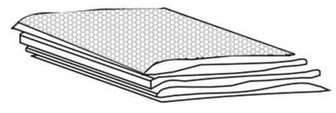

Z1 1pcs

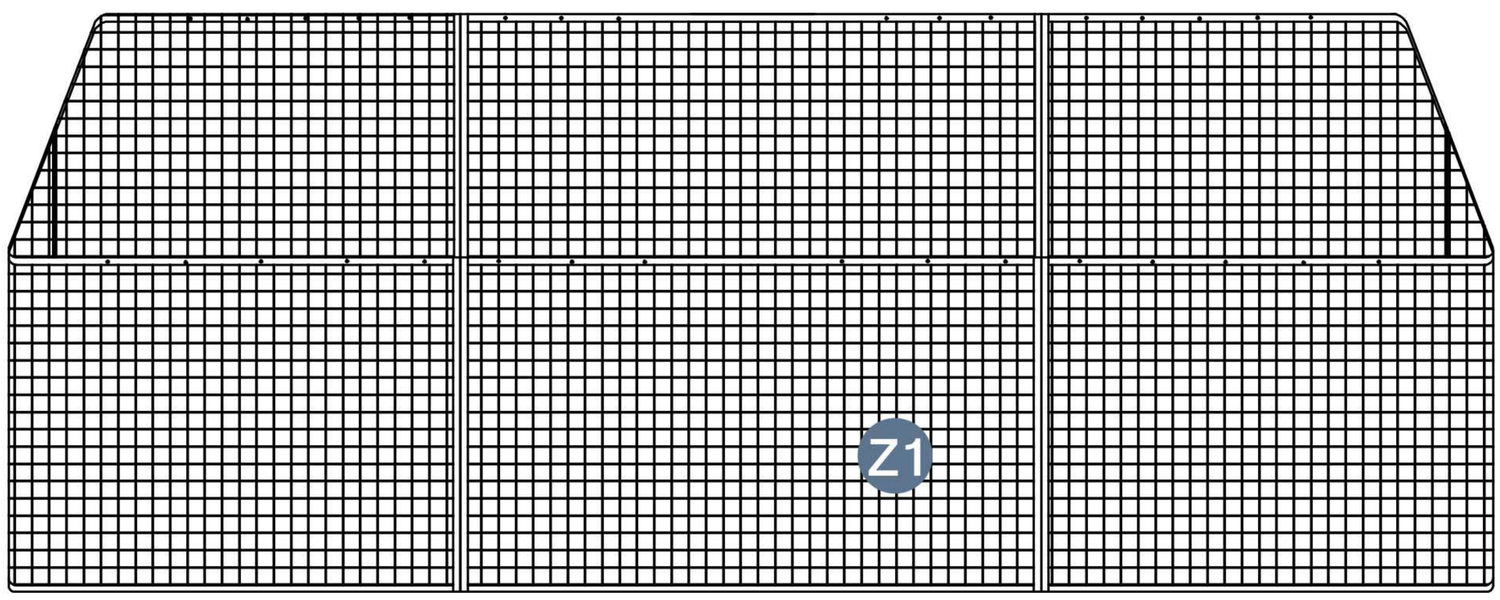

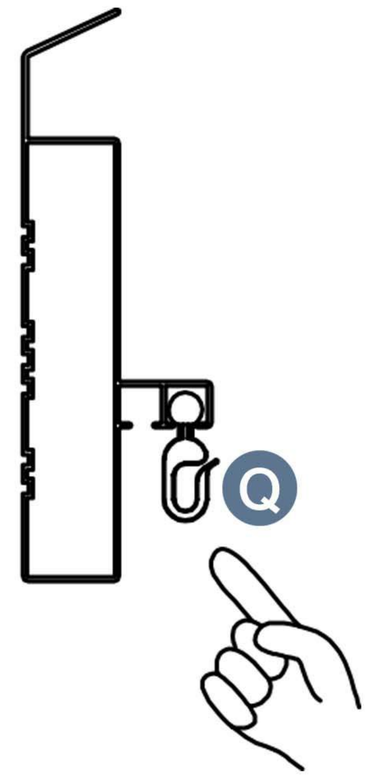

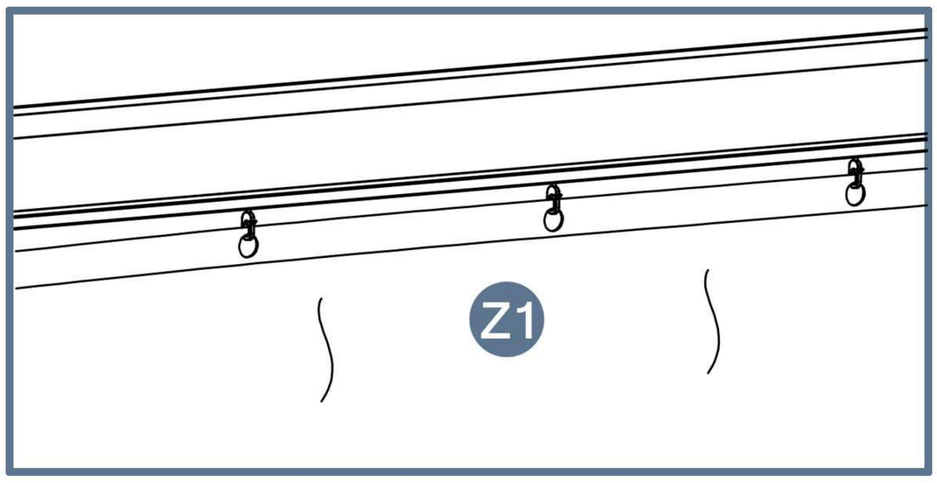

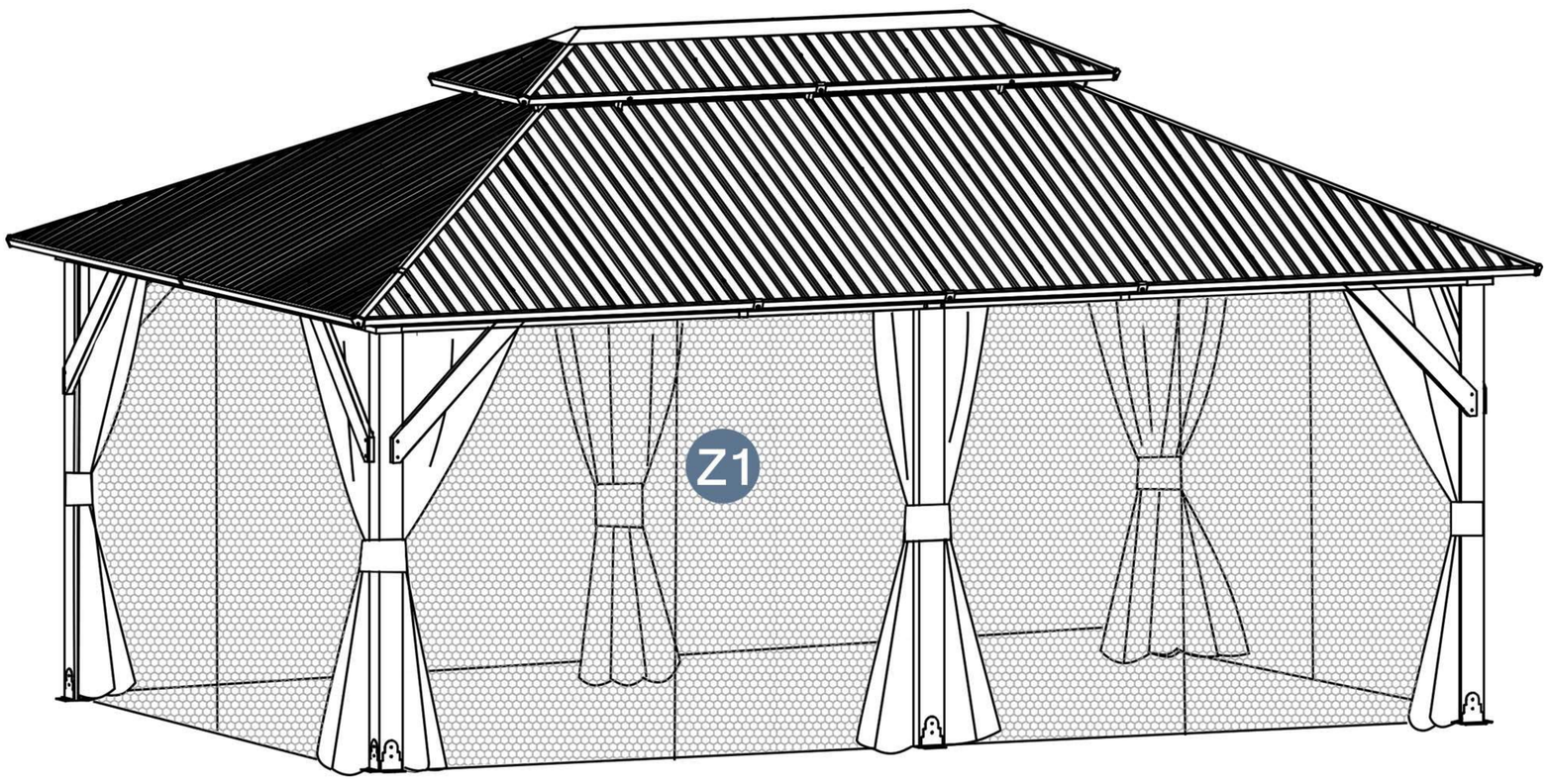

STEP43

Parts required

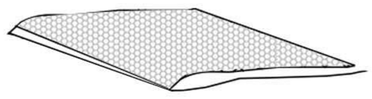

Z2 1pcs

Install a small mesh screen at the top on the inside.

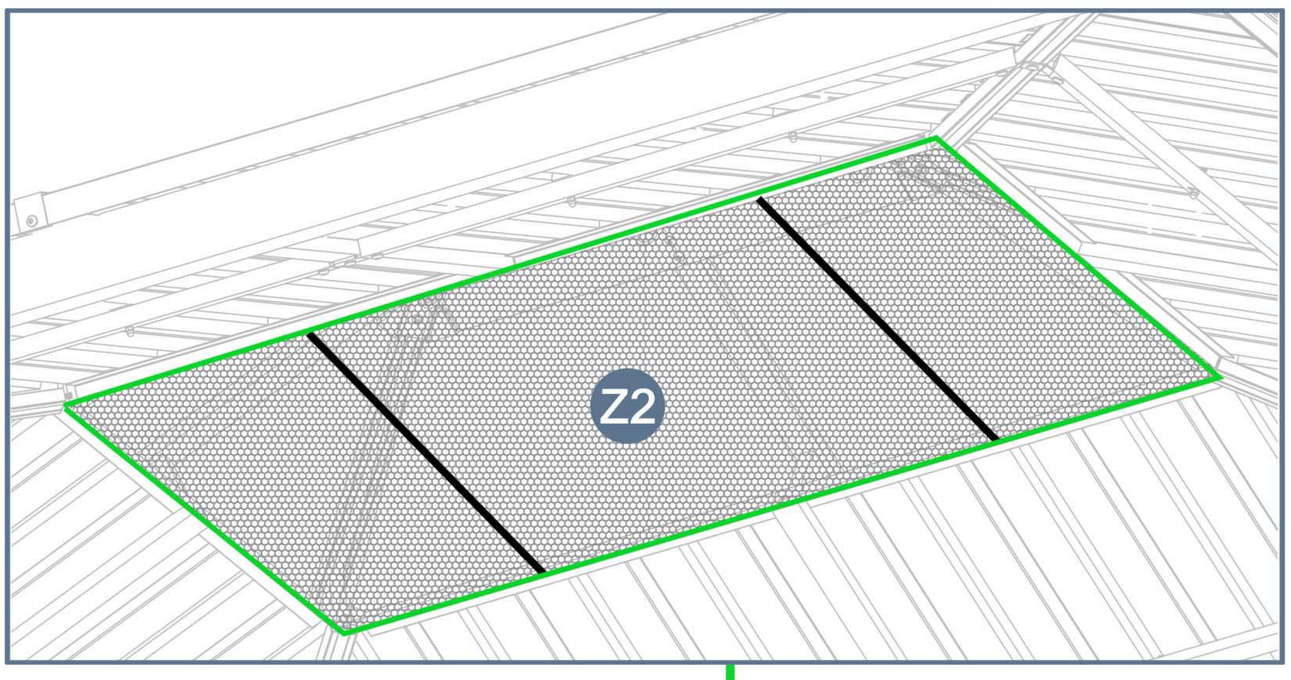

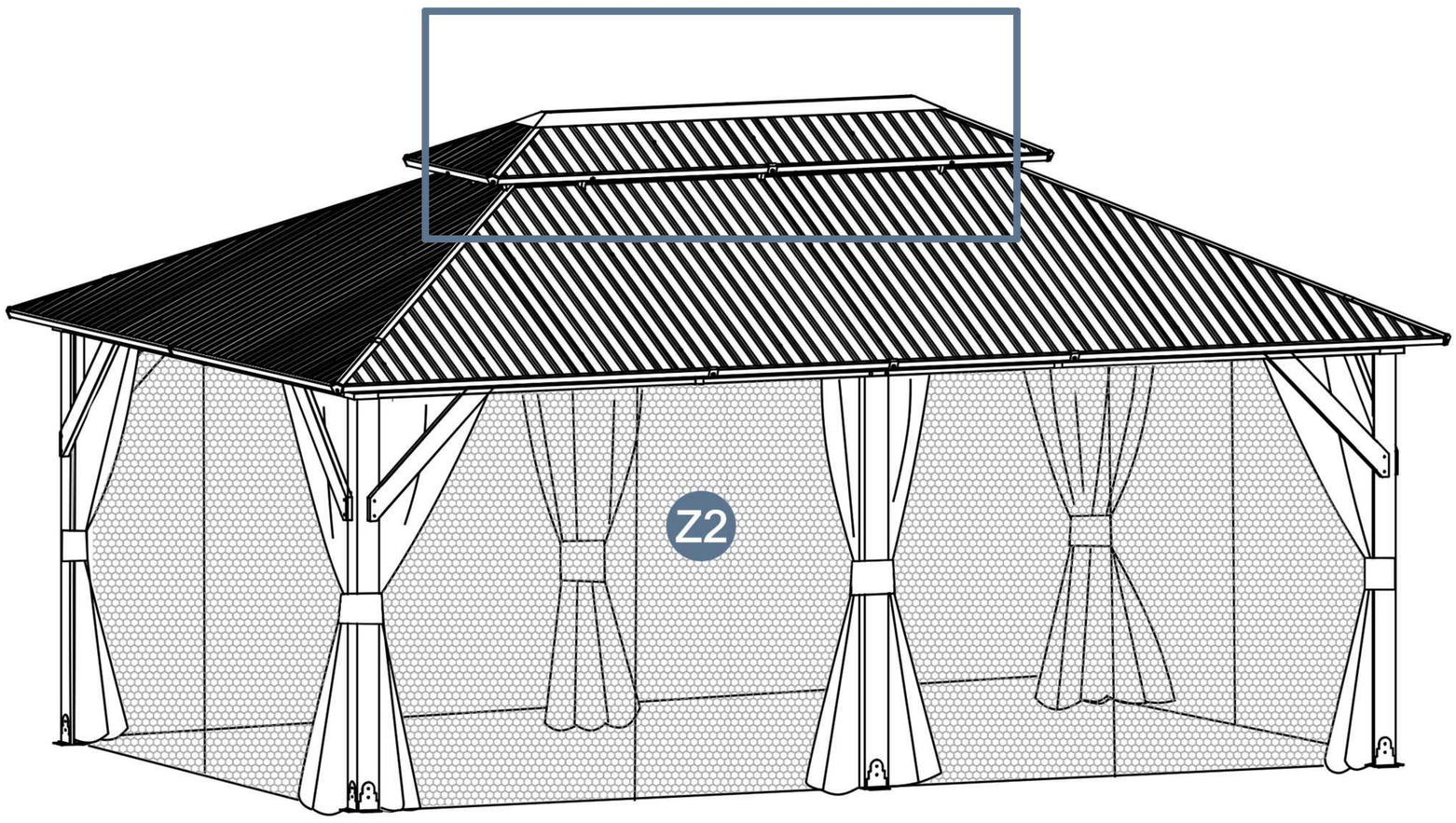

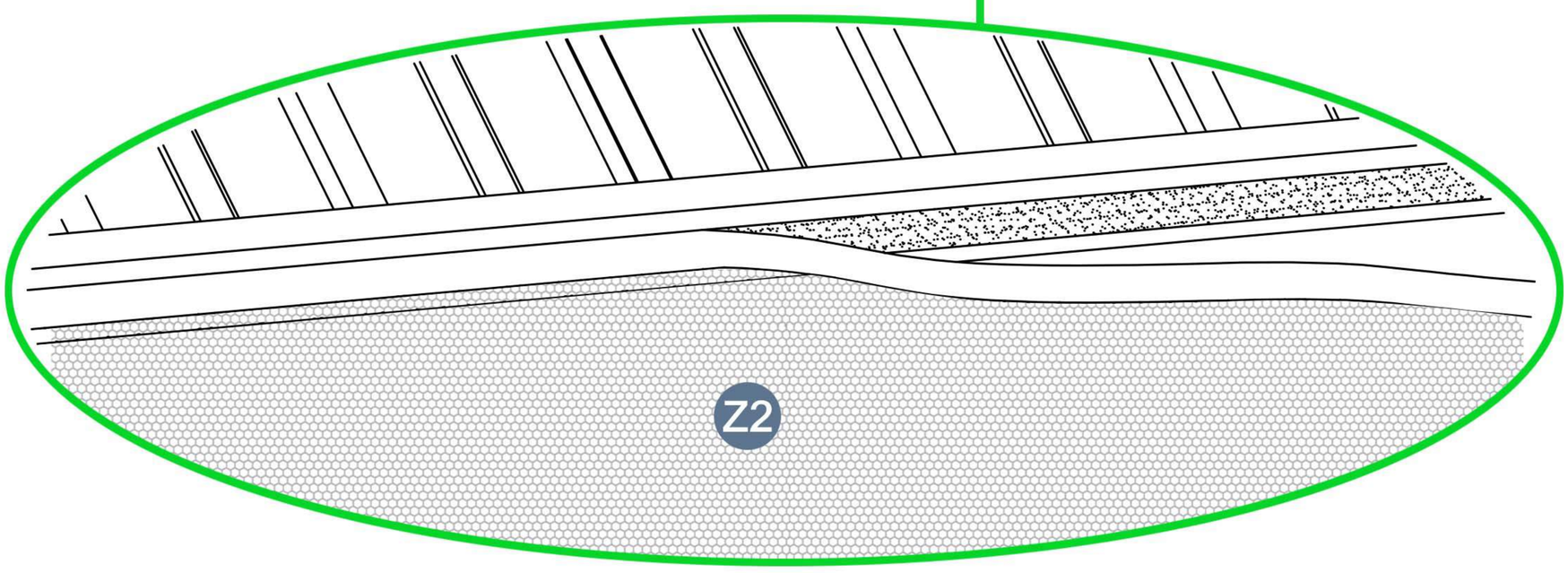

STEP44

Parts required

② 10pcs

To improve stability of gazebo,expansion screws very necessary. Expansion screws use for cement surfaces and have included in the package.

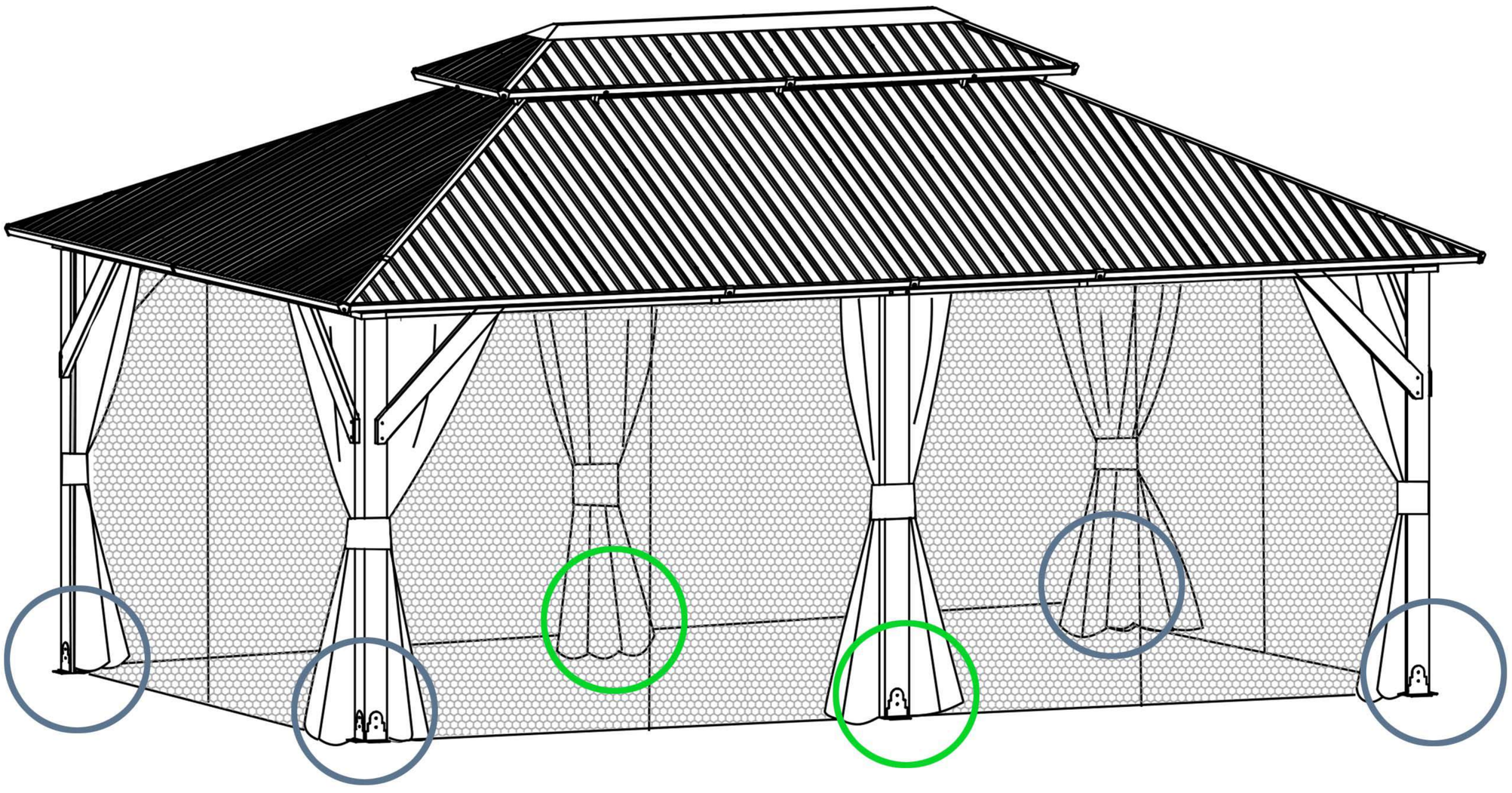

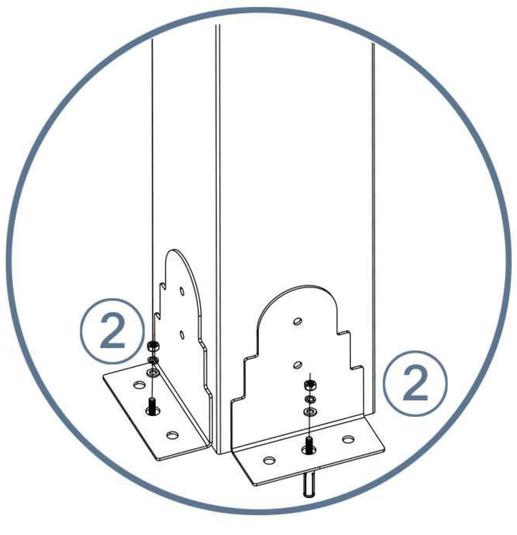

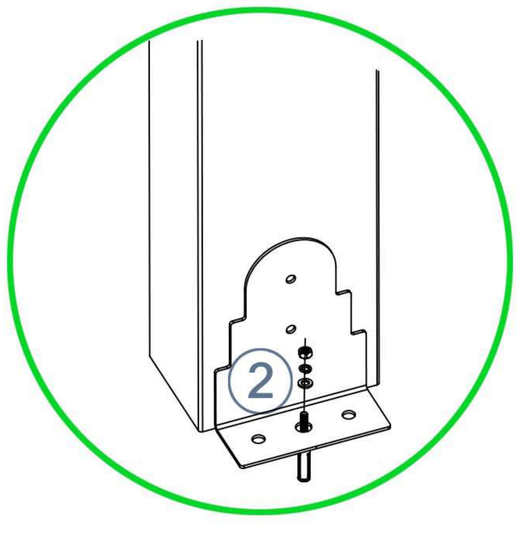

! ! ! For safety's stake, please check and make sure that all screws are tightened after all installation is complete.

Installation Completed

Hope you enjoy this product.

If you have any concerns about gazebo Installation, please feel free to contact us. We will reply within 24 hours.

E-mail: cs.helper01@gmail.com

12X20FT

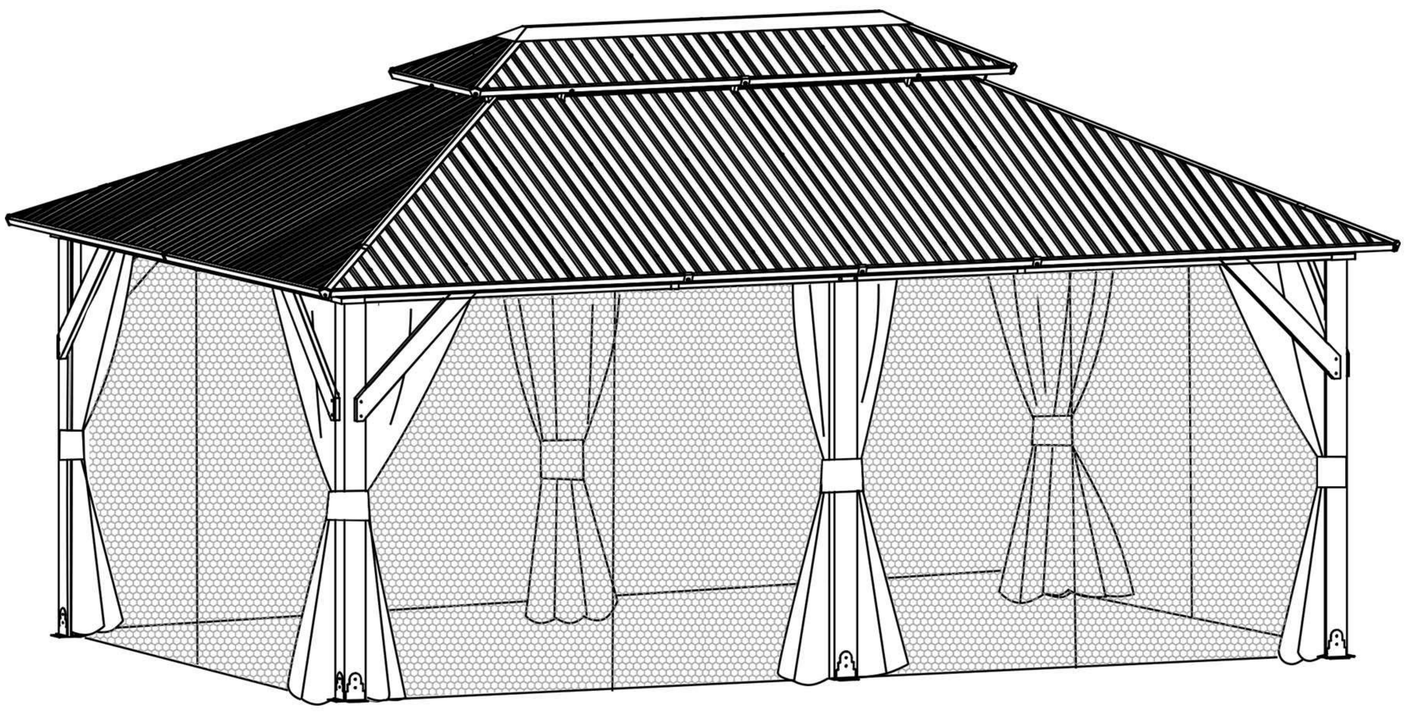

SKU:A001G078-1
A001G078-2
A001G078-3
A001G078-4
A001G078-5
A001G078-6
A001G078-7