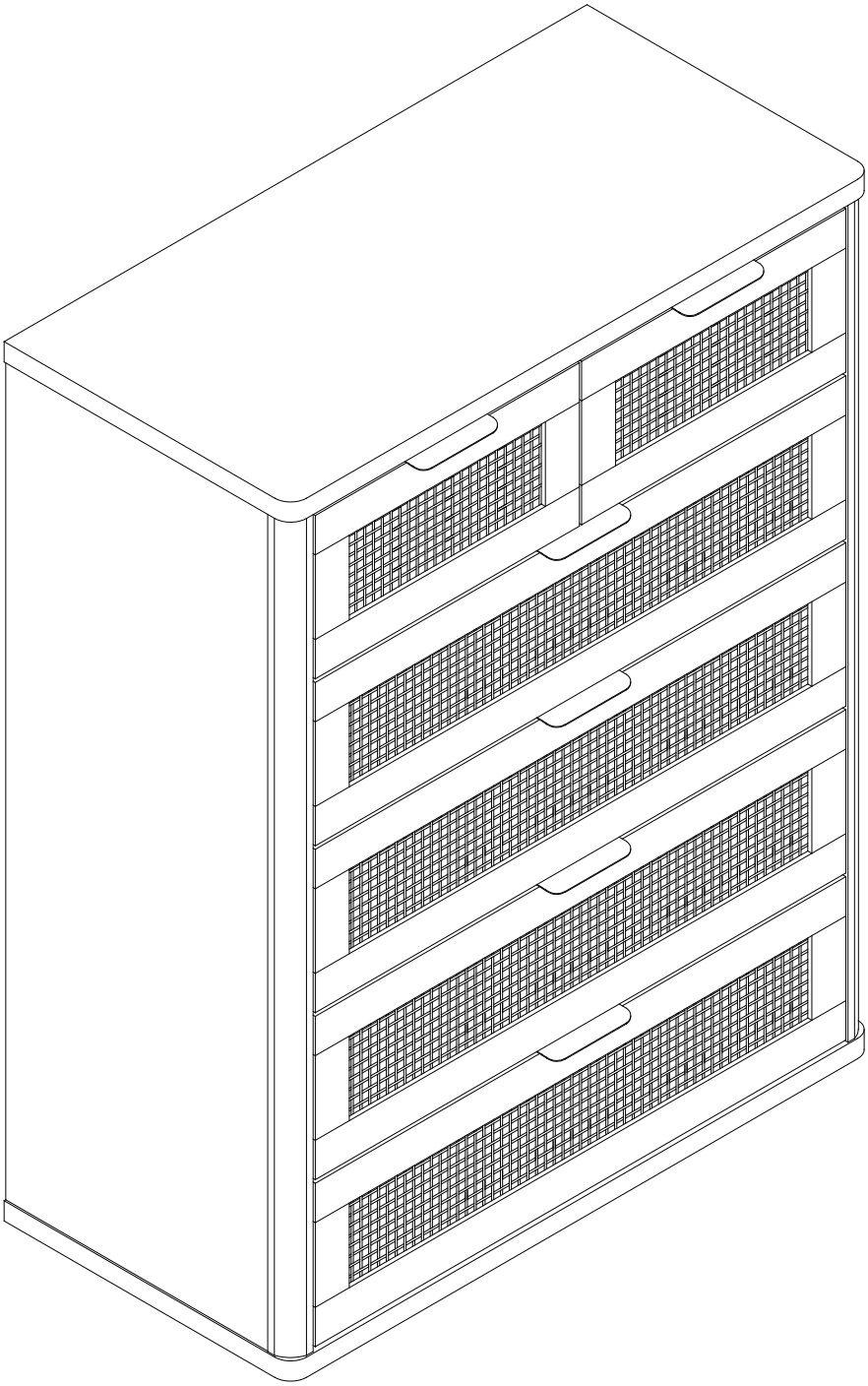

ATTENTION

If there is any missing, please kindly send us messages to let us know the part number of missing part regarding to the first page of instructions.

Please also provide your full address, recipient name and contact phone number so that we can send replacement to you as soon as possible.

Children have died from furniture tipover. To reduce the risk of furniture tipover. ALWAYS install tipover restraint provided.

PART LIST

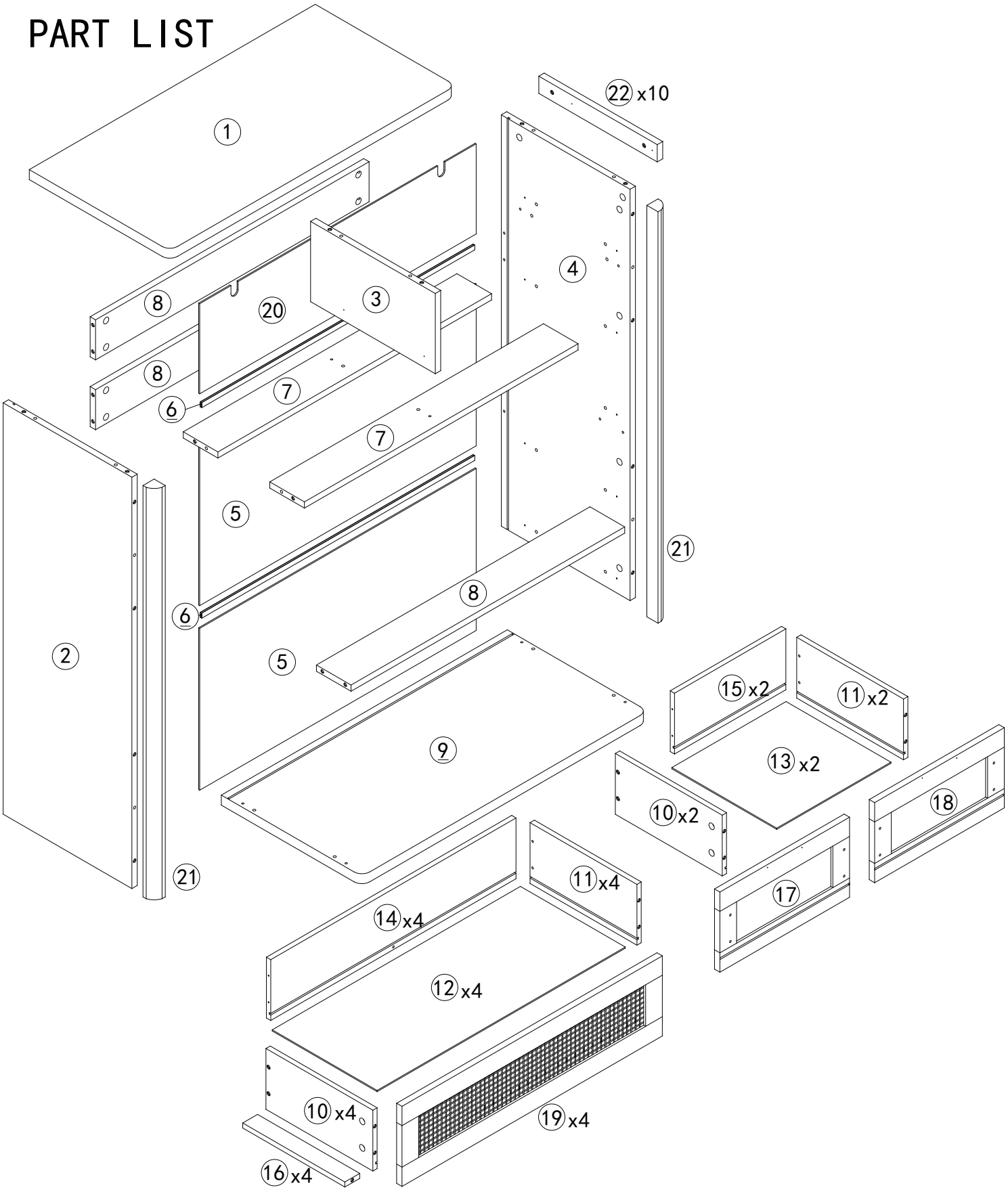



∅6x35MM

Ax58+4



∅15x10MM

Bx58+4



∅6x30MM

Cx20+2

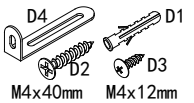

M4x40mm M4x12mm

Dx2



M3x12mm

Ex60+4



M4x35mm

Fx30+3



M4x45mm

Gx4

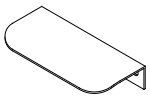

96mm

Hx6

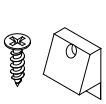

M3x16mm

Ix12

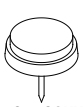

∅27x23MM

Jx6

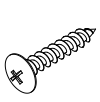

M4x22mm

Kx20+2

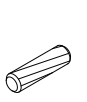

∅6x20MM

Lx20+2

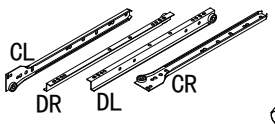

300mm

x6

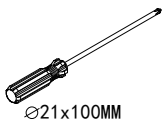

∅21x100MM

x1

PART LIST

1 x1 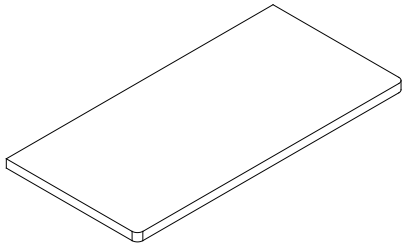	2 x1 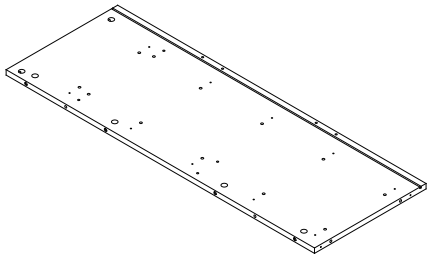	3 x1 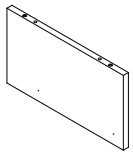
4 x1 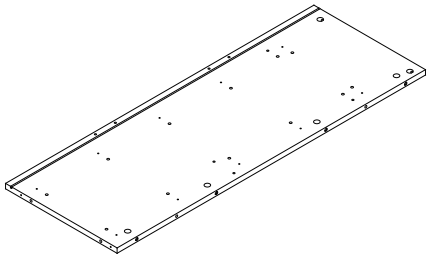	5 x2 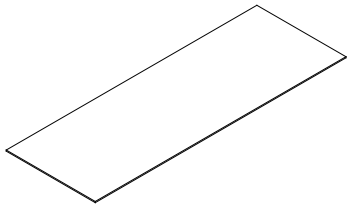	6 x2 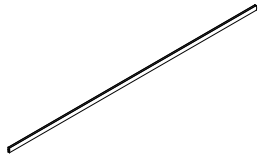
7 x2 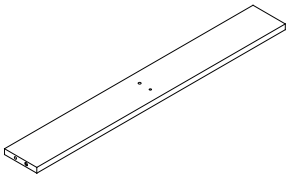	8 x3 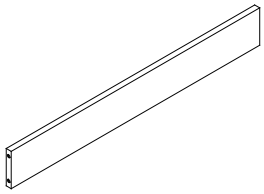	9 x1 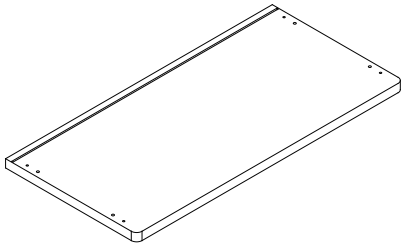
10 x6 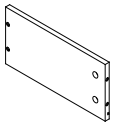	11 x6 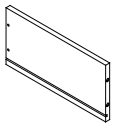	12 x4 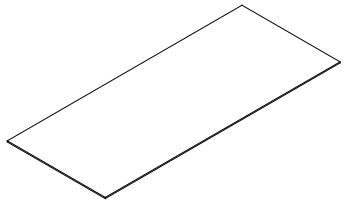
13 x2 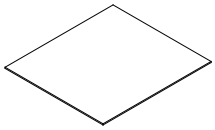	14 x4 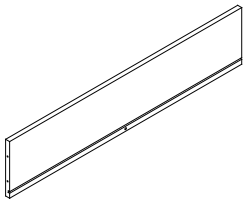	15 x2 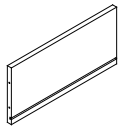

16 x4 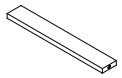	17 x1 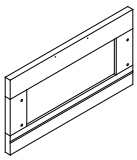 L	18 x1 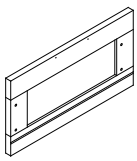 R
19 x4 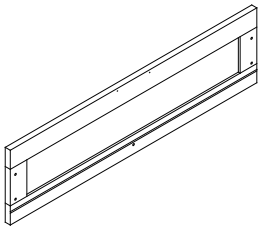	20 x1 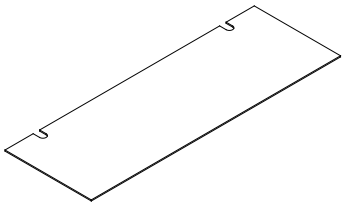	21 x2 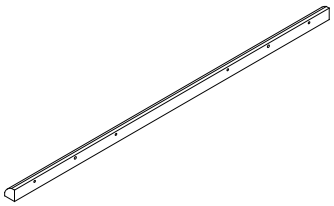
22 x10 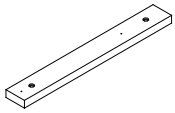		

X 6SET

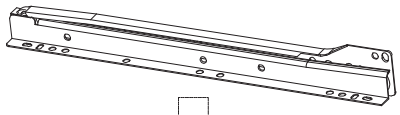

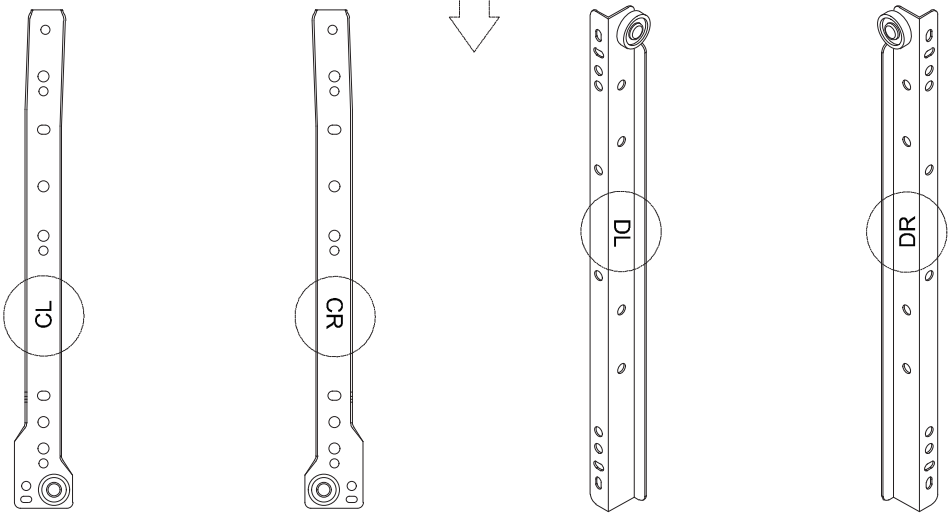

CL CR DL DR

D=

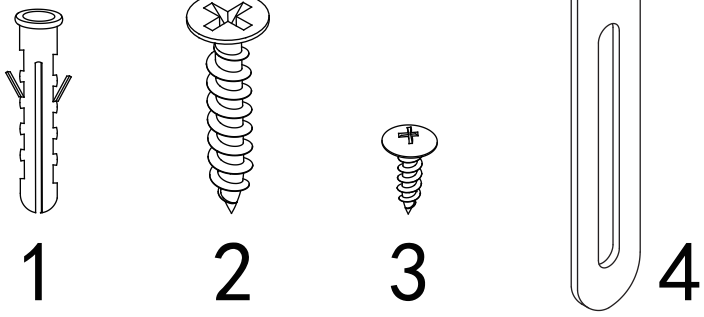

1 2 3 4

STEP1

Note: Put the anti-tip deviceD4 on the top, near thebackside, and fix it with a screw D3.

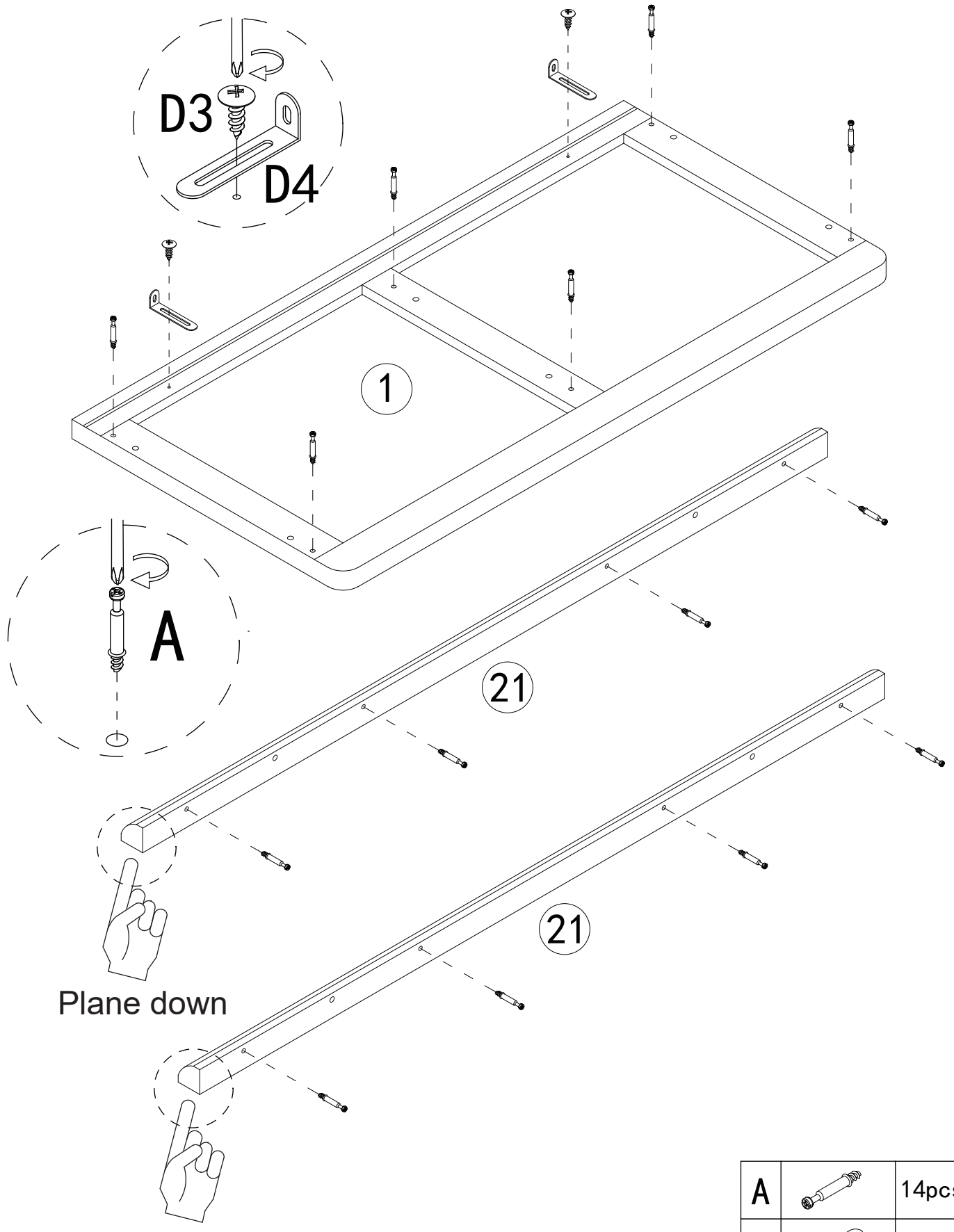

A		14pcs
D	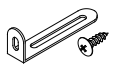	2pcs

STEP2

Take care to distinguish between C and L.

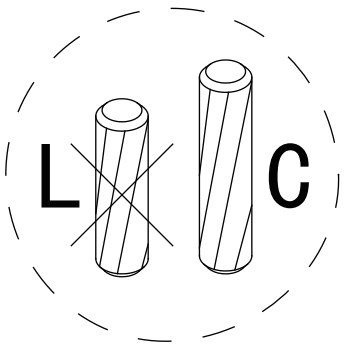

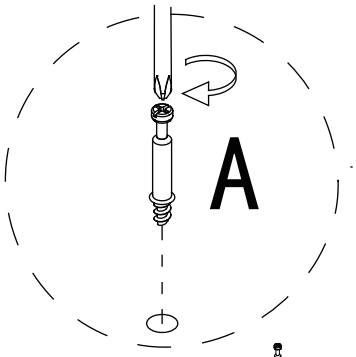

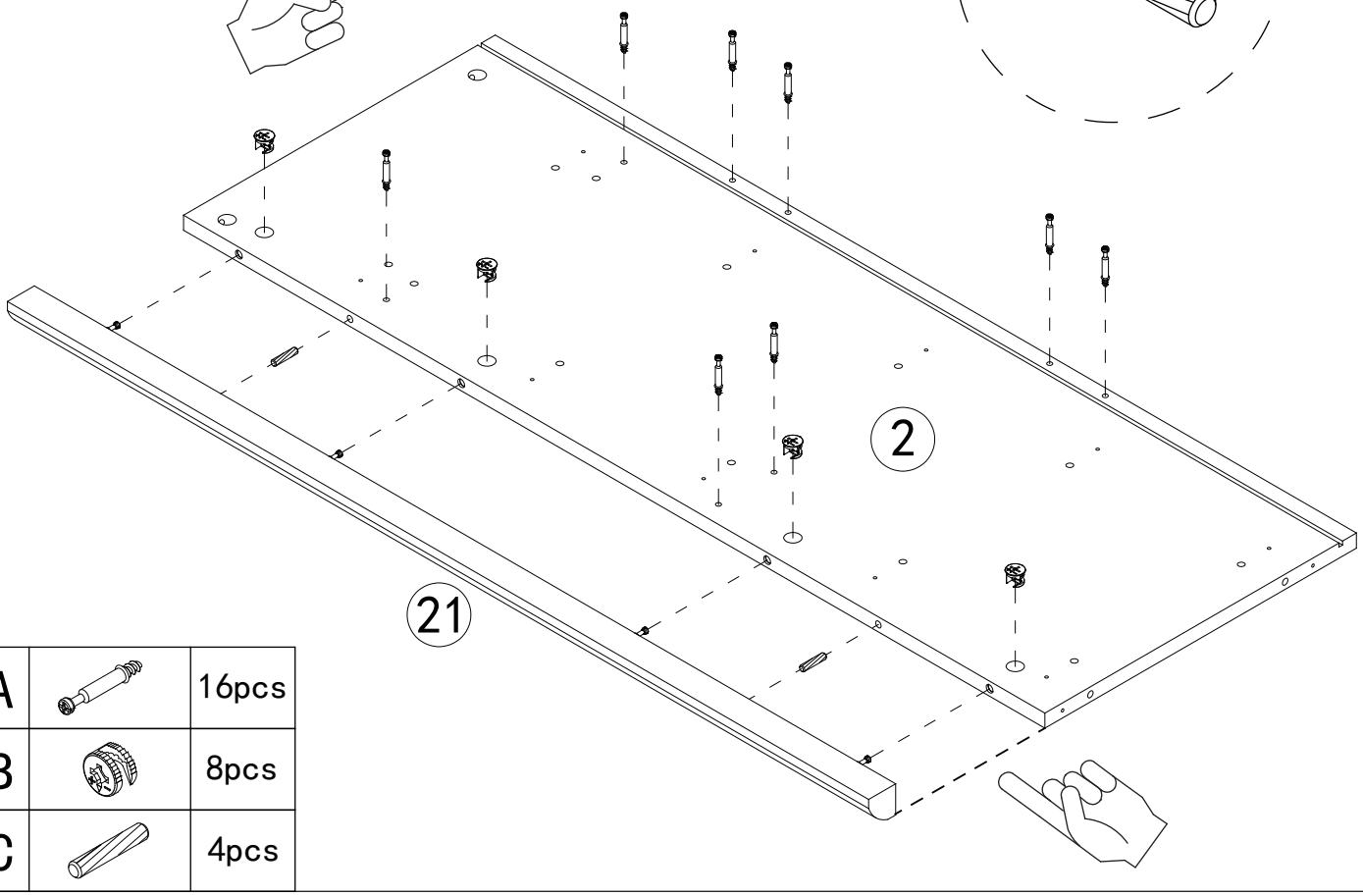

A		16pcs
B		8pcs
C		4pcs

STEP3

Note that the foramen magnum is backward.

Take care to distinguish between C and L.

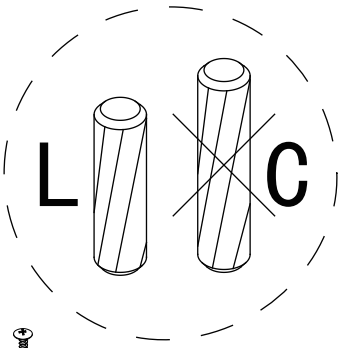

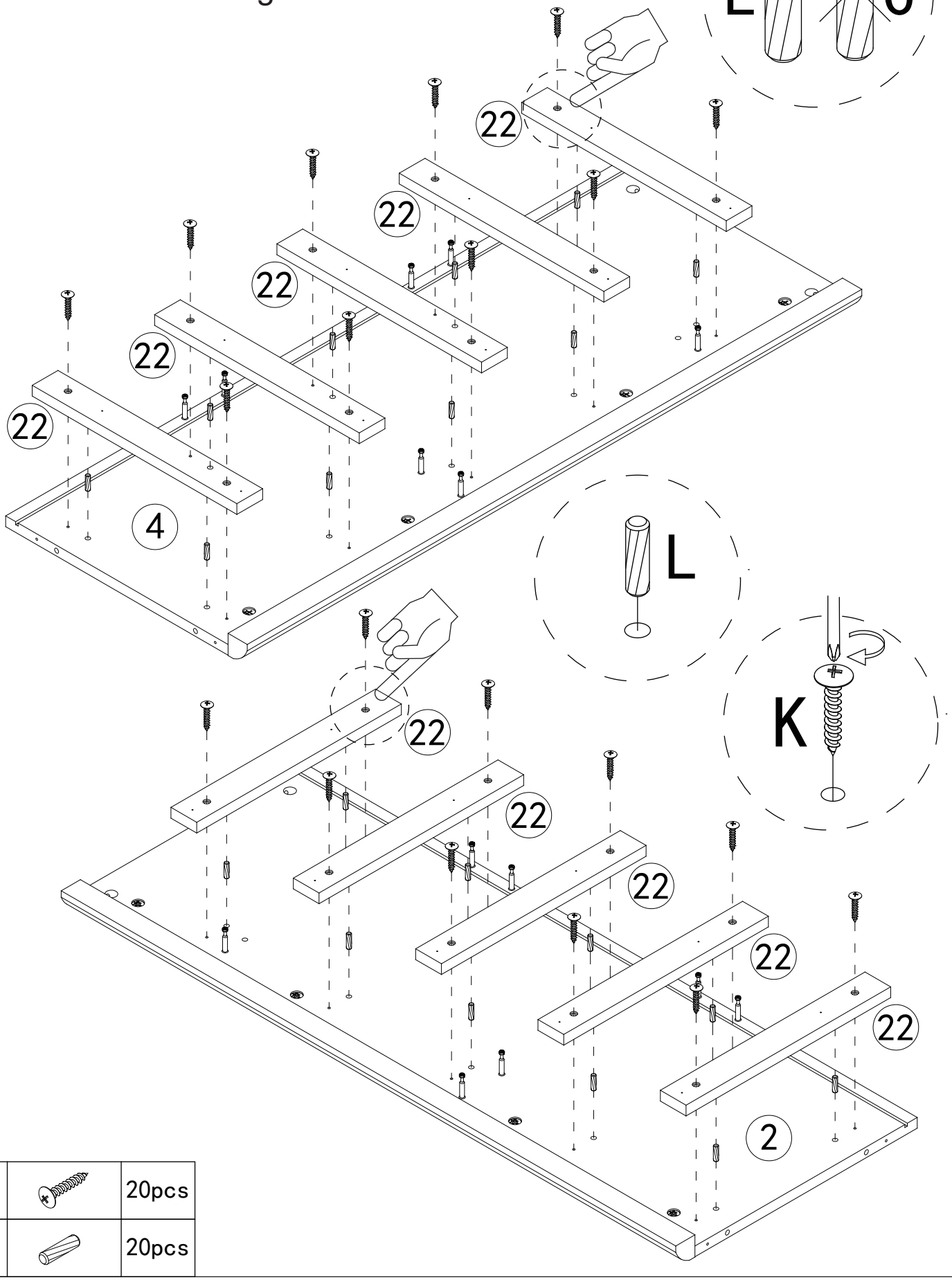

K		20pcs
L		20pcs

STEP4

Pay attention to the hole position.

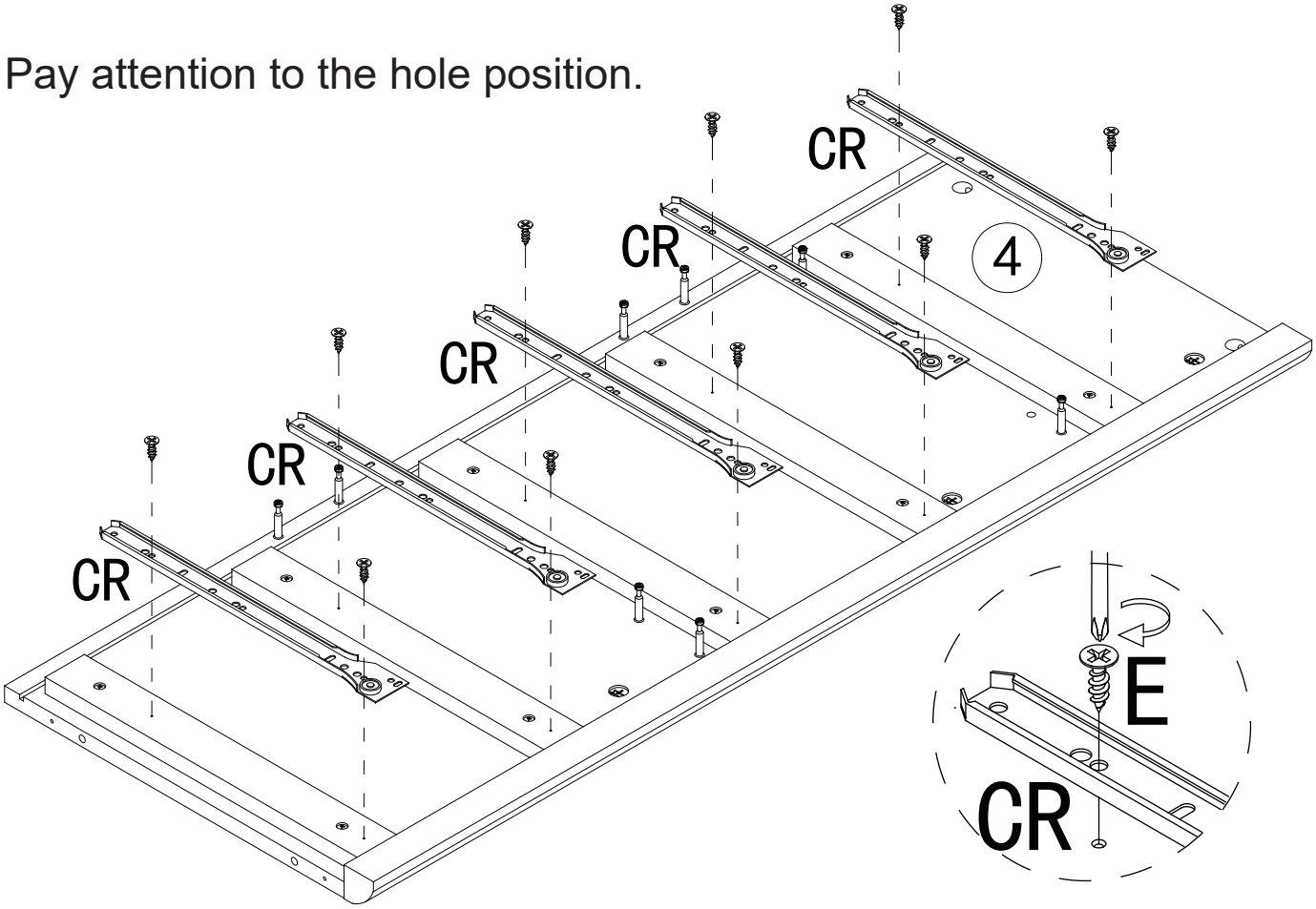

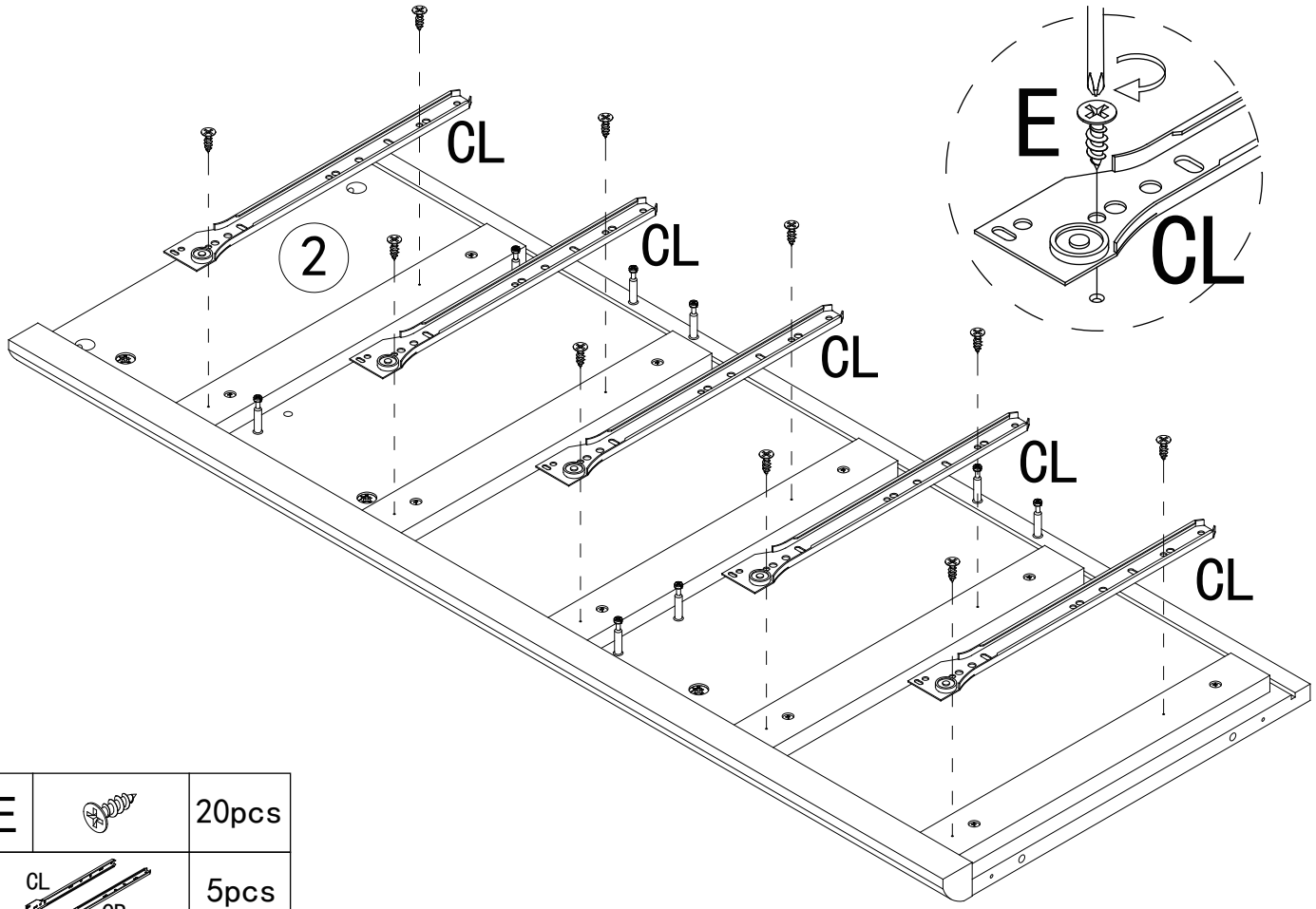

E		20pcs
		5pcs

STEP5

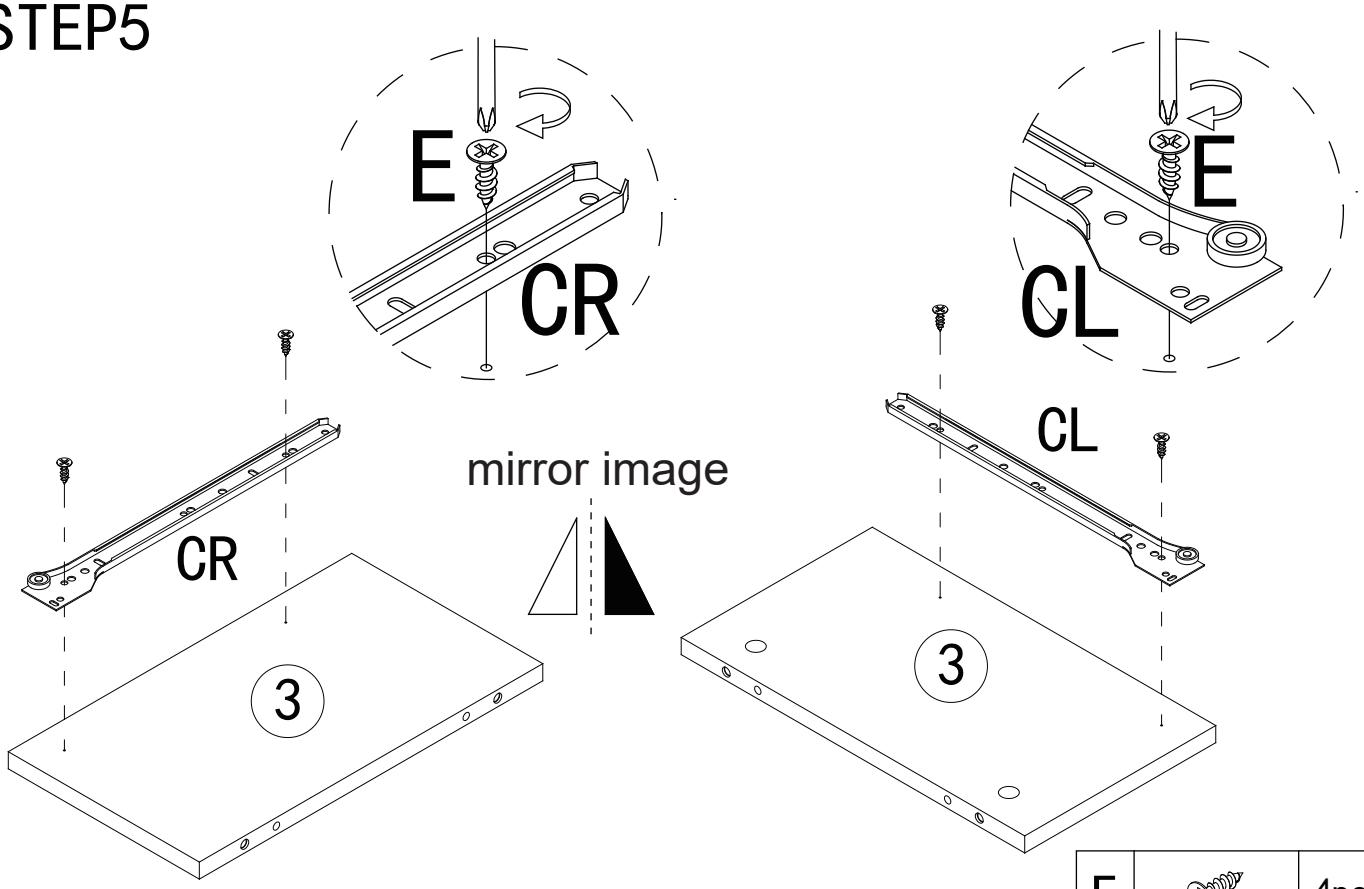

E	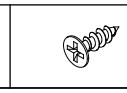	4pcs
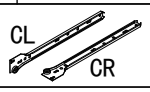		1pc

STEP6

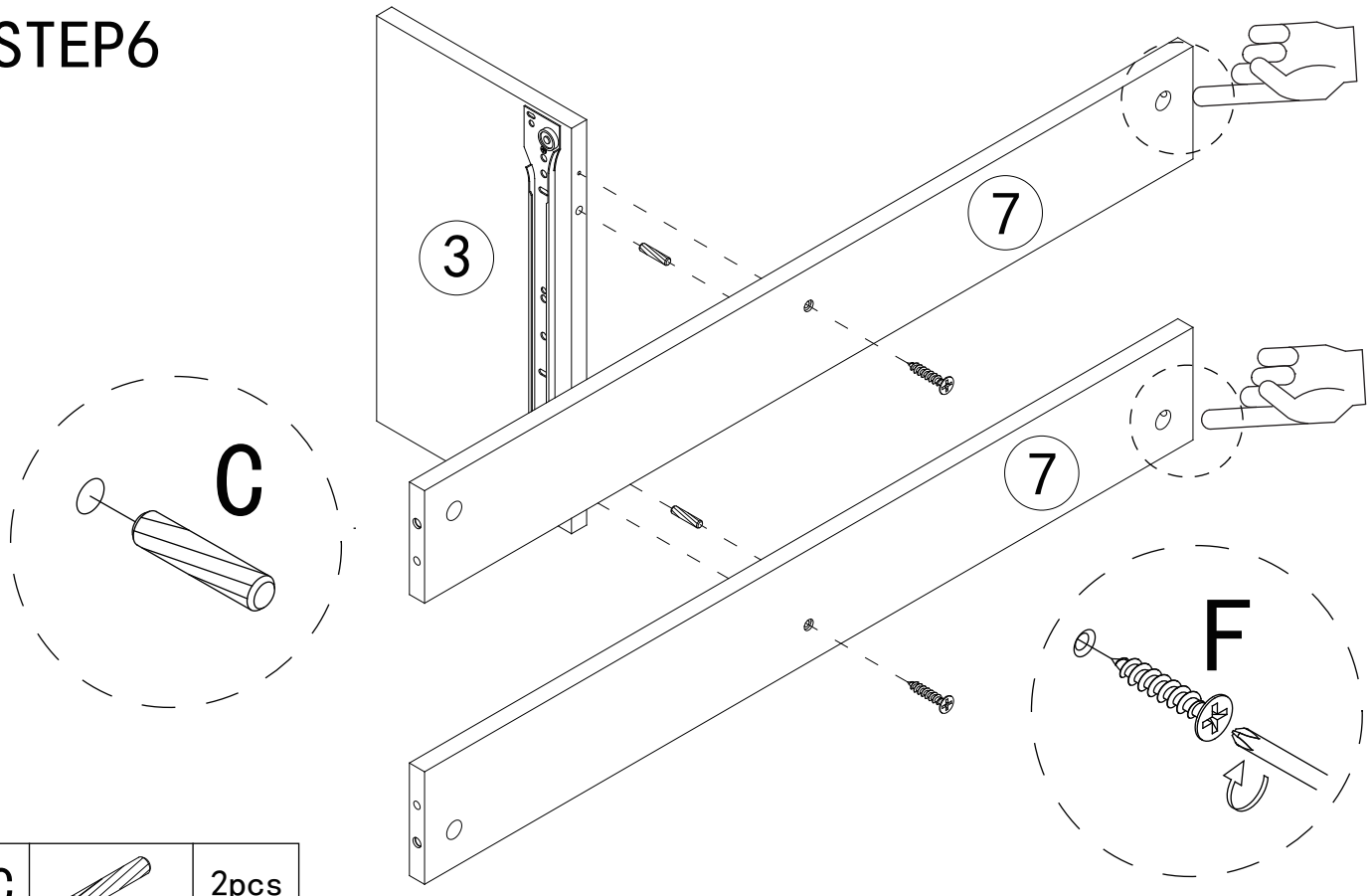

C		2pcs
F	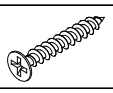	2pcs

Pay attention to the hole position.

STEP7

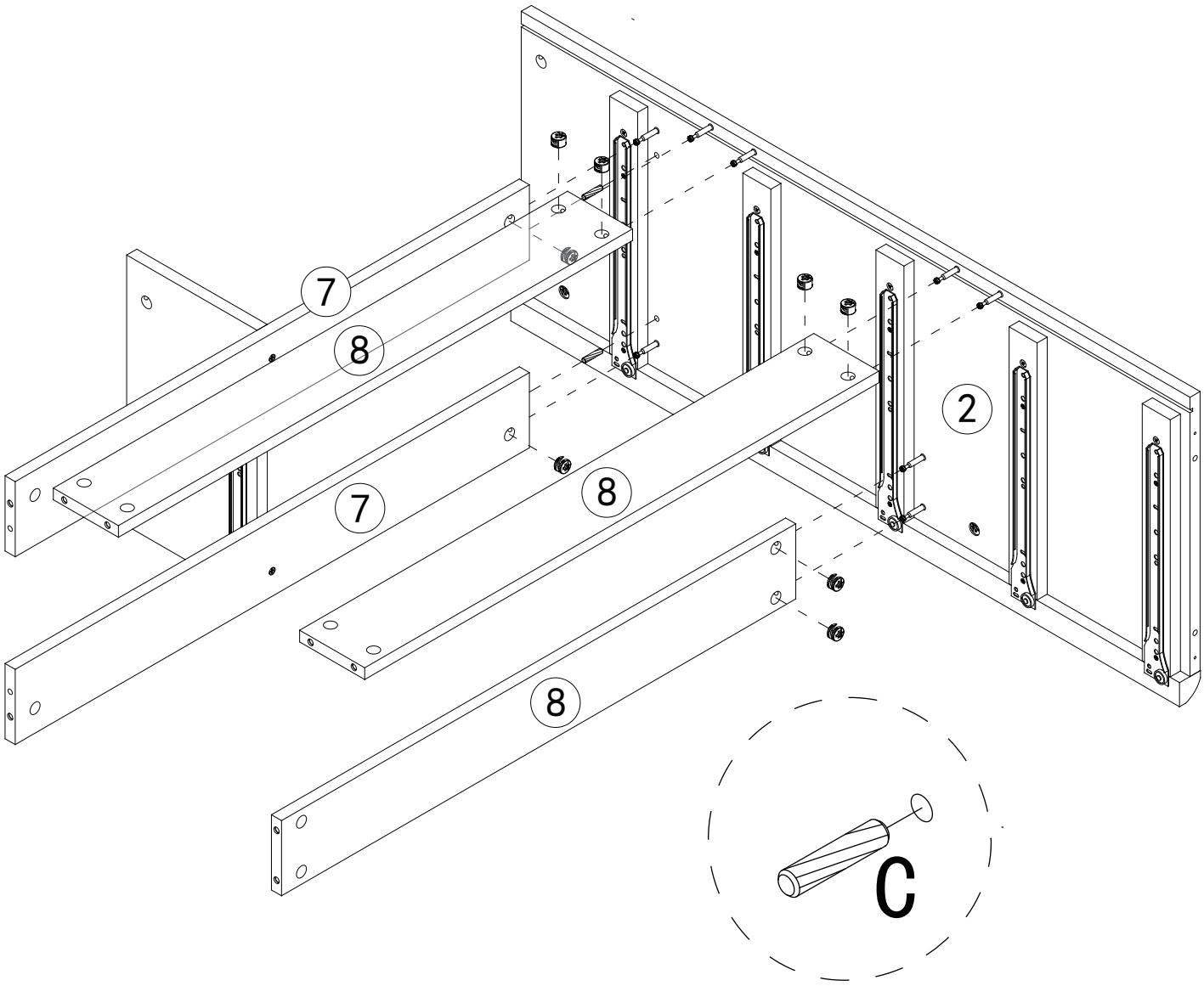

B		8pcs
C		2pcs

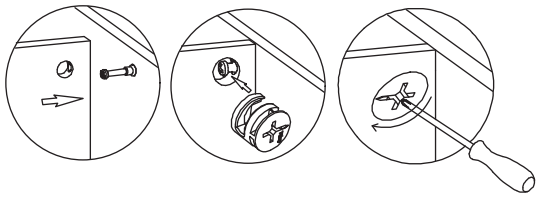

STEP8

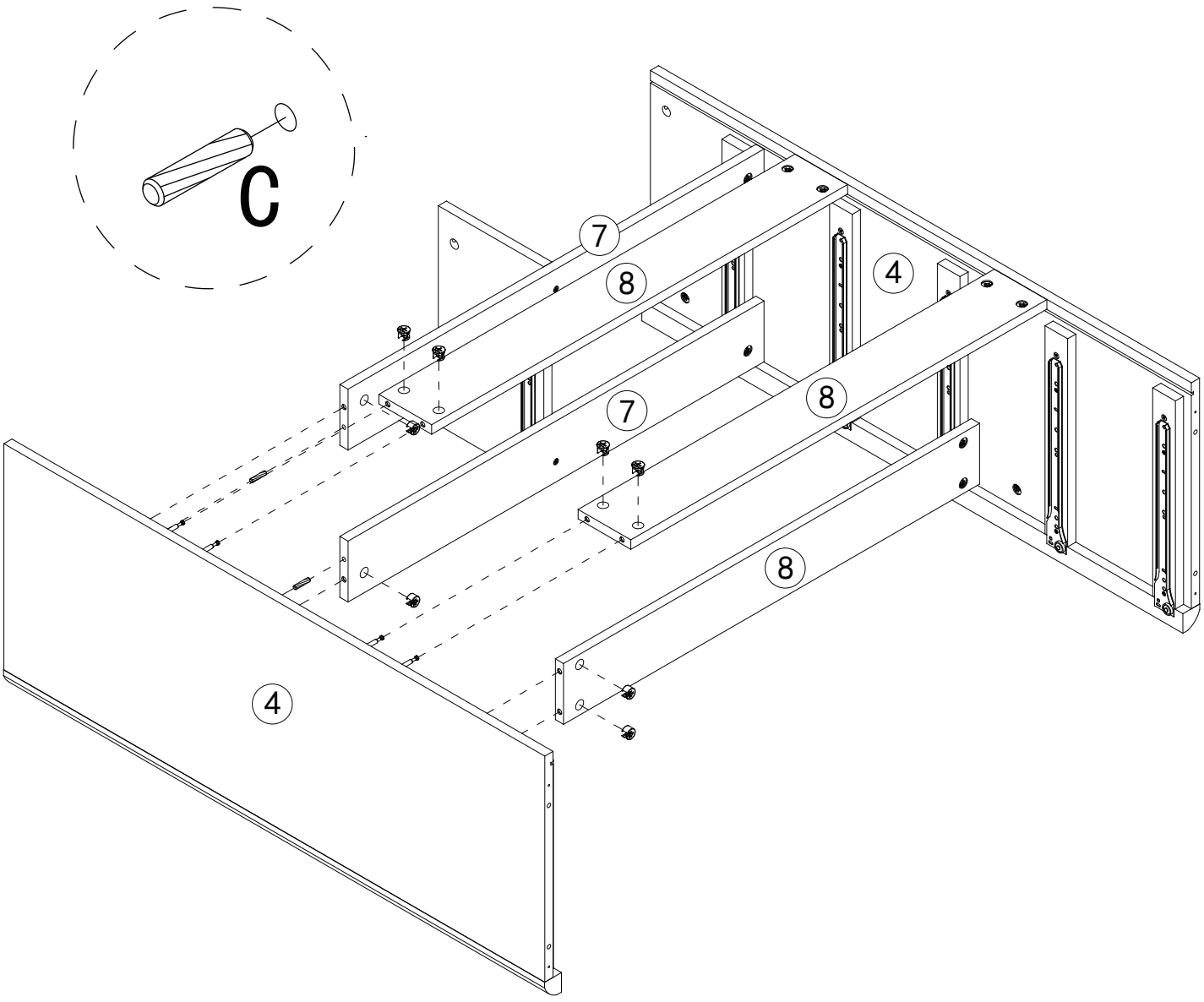

B		8pcs
C		2pcs

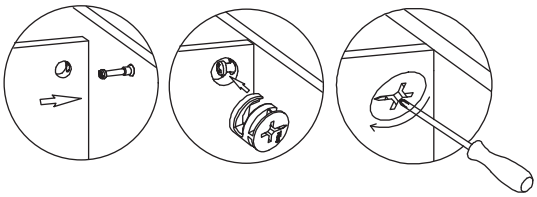

STEP9

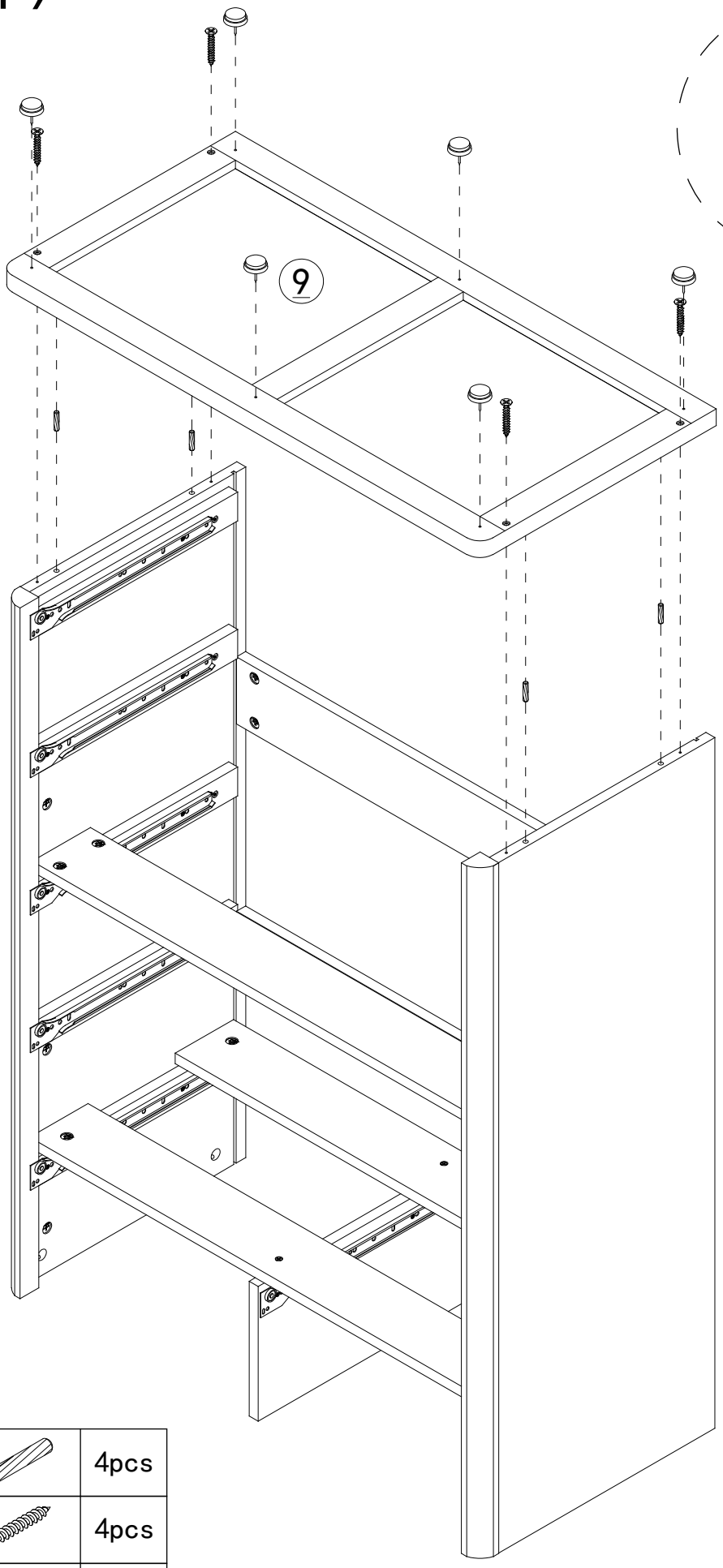

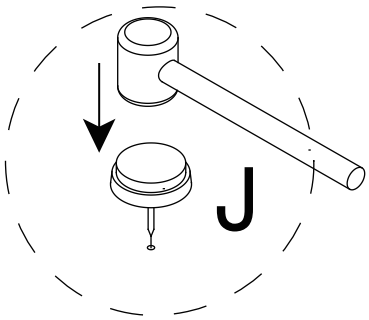

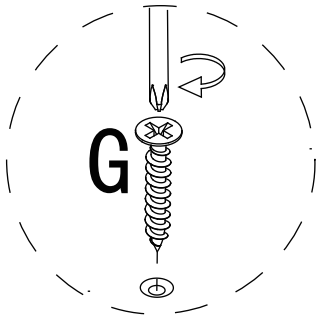

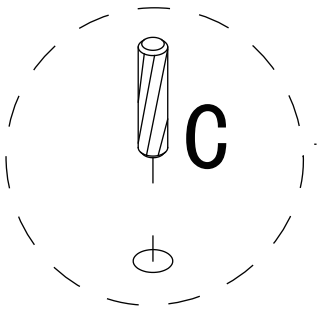

C		4pcs
G		4pcs
J		6pcs

STEP10

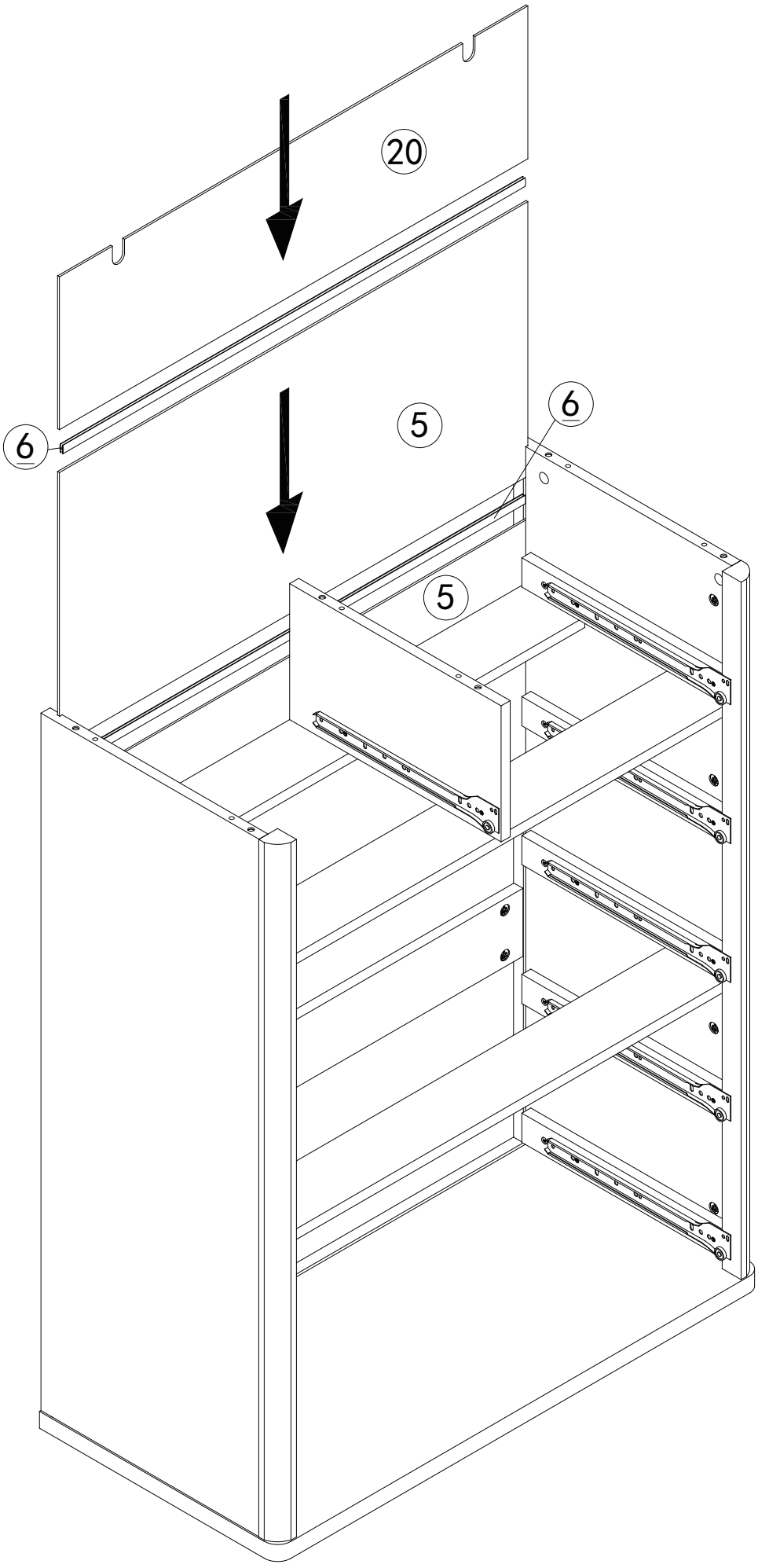

STEP11

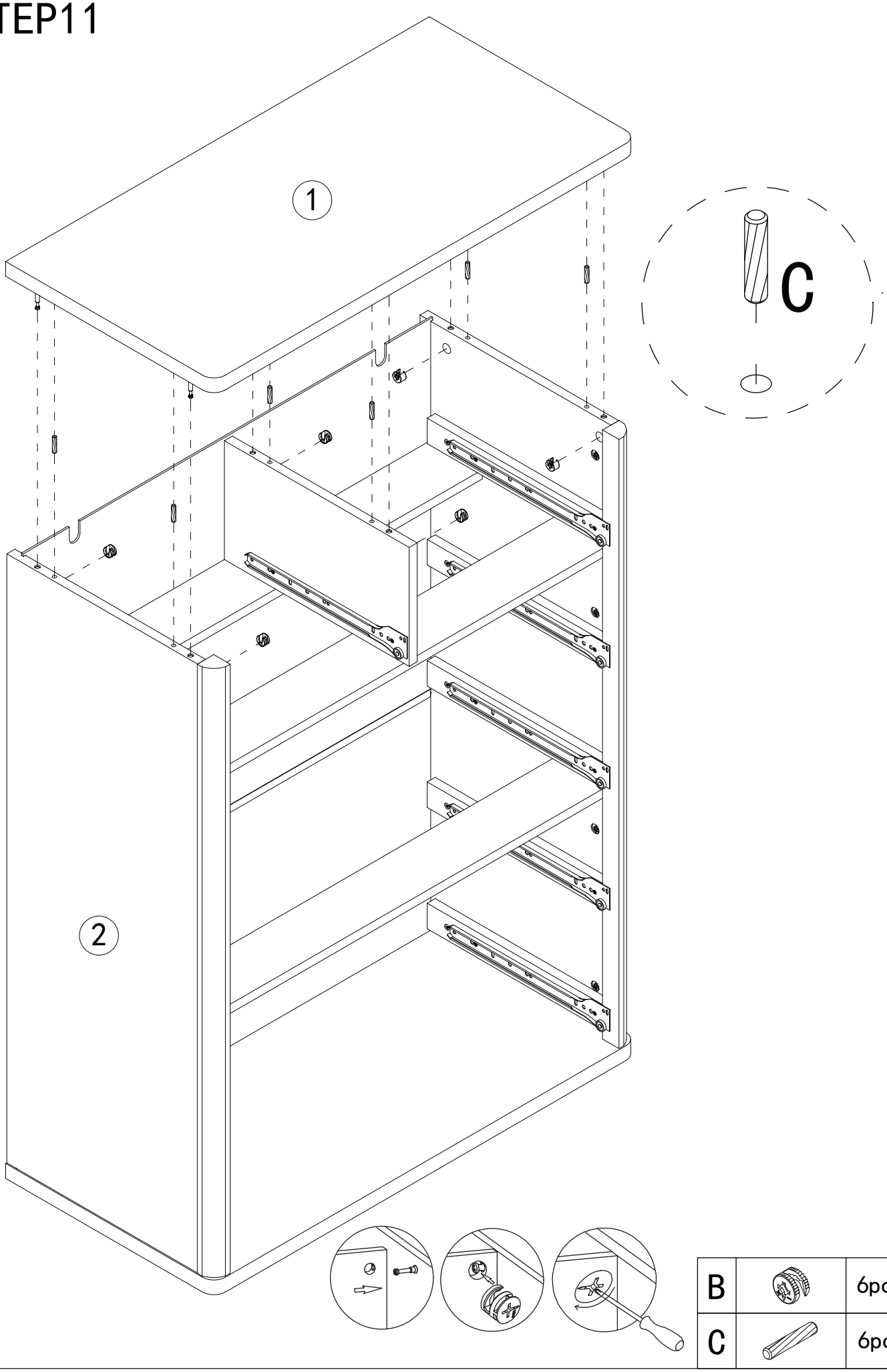

B		6pcs
C		6pcs

STEP12

Be sure to install back plate buckle to prevent the cabinet from shaking.

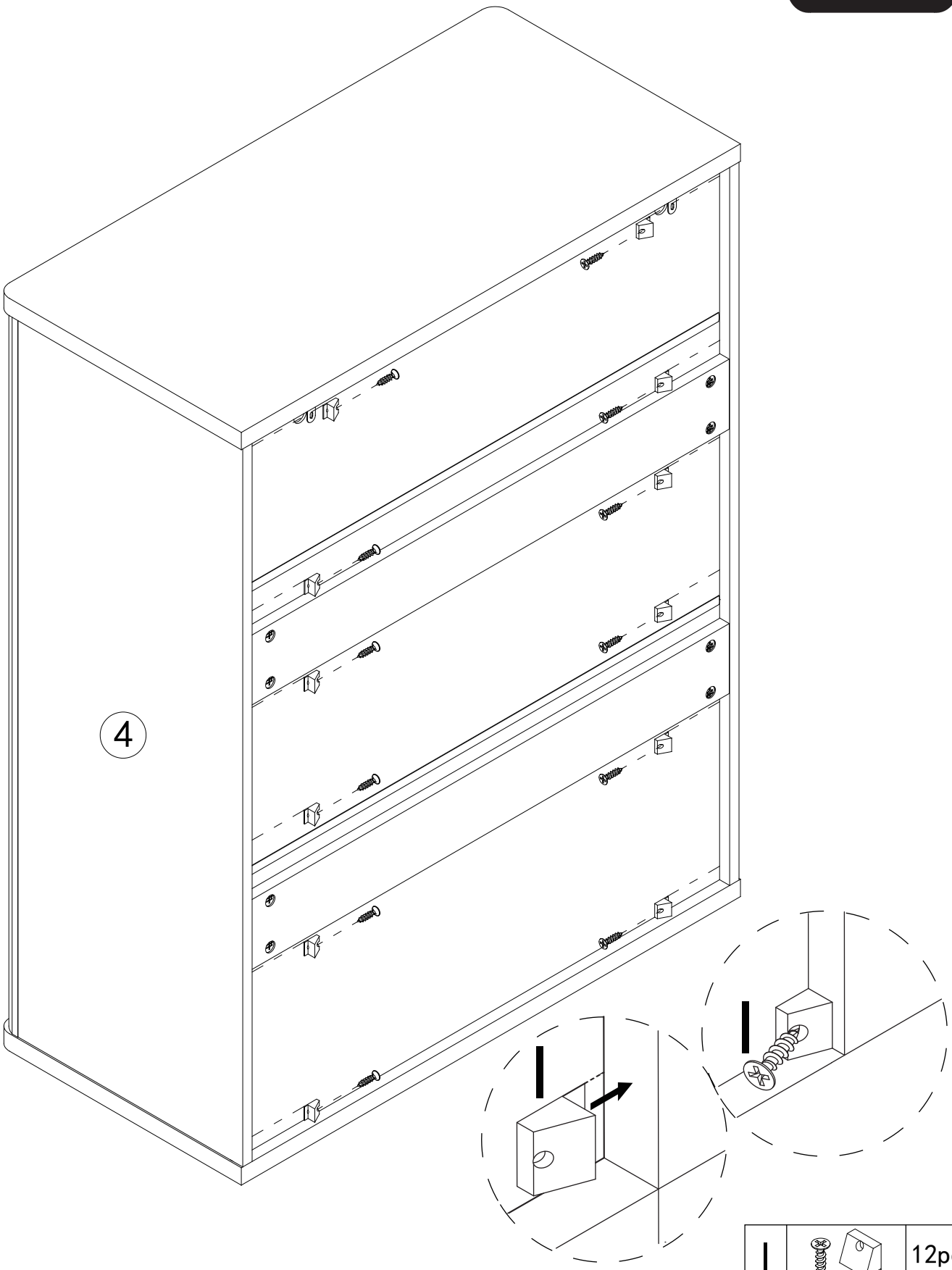

I		12pcs

STEP13

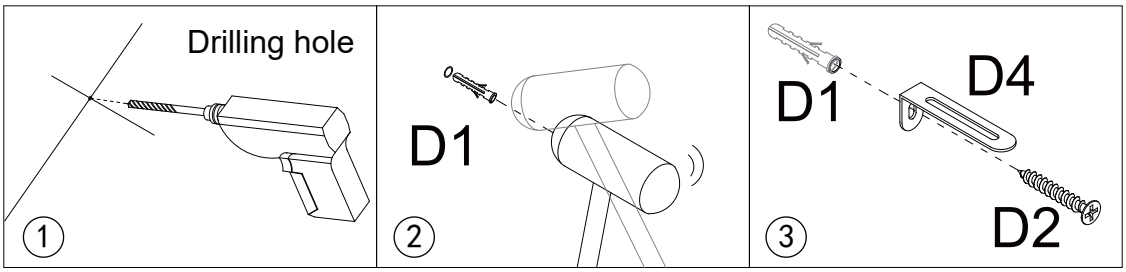

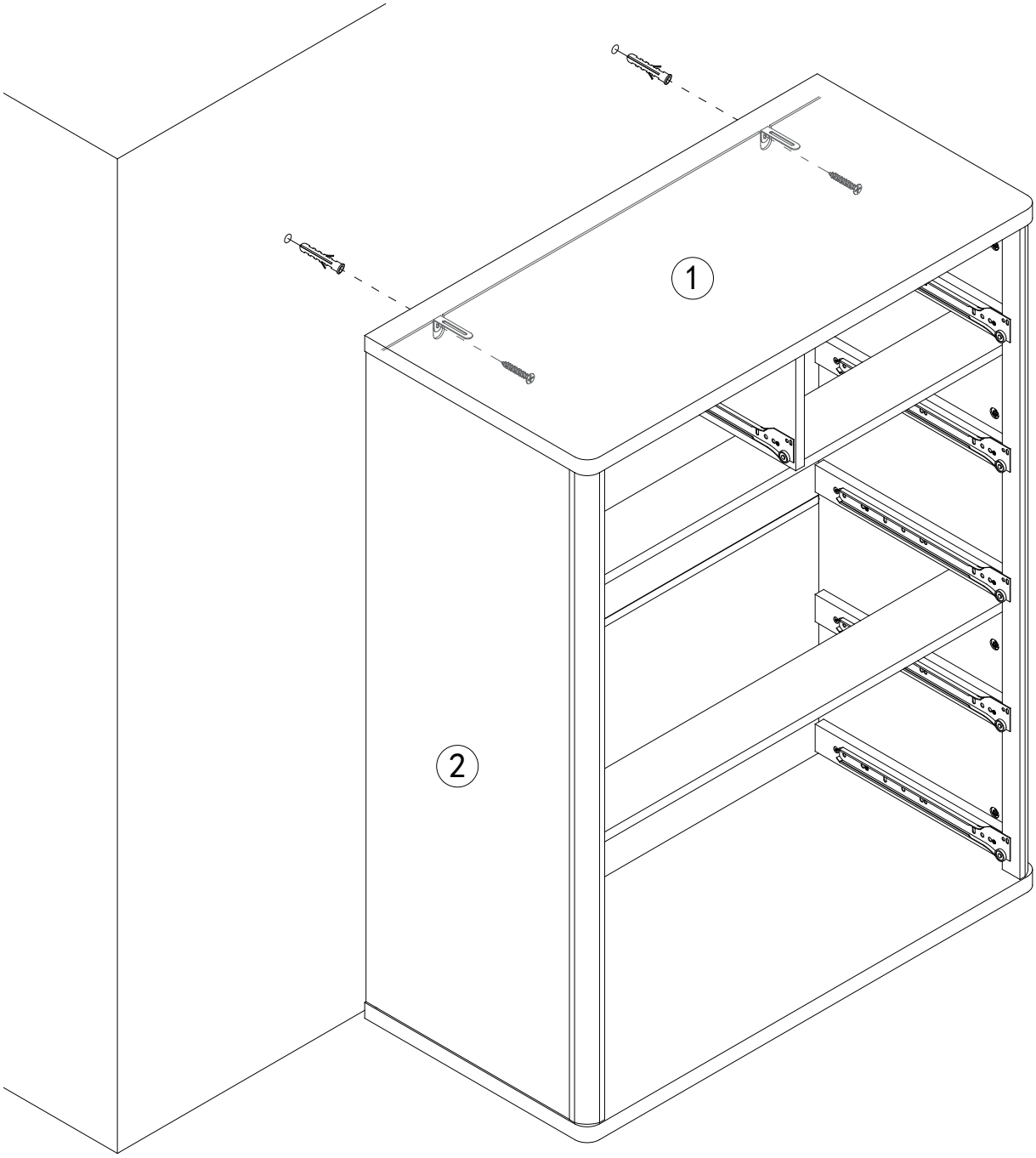

Drill a hole in the wall, then hammer the D1 into the wall with a hammer.

Note: Follow step
link D4 and D1 with a D2 using a screwdriver,and assembly it tightly.

D		2pcs

STEP14

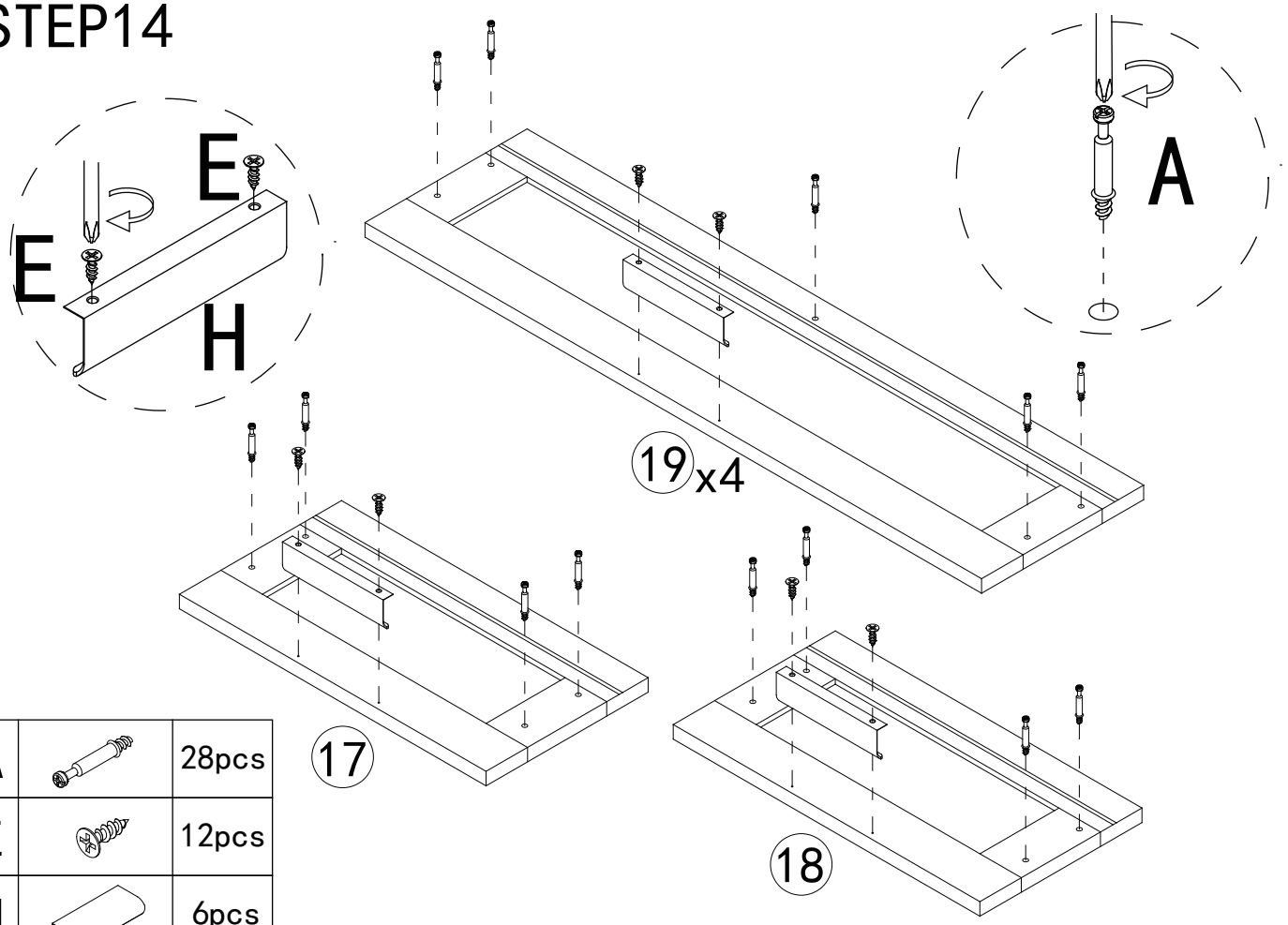

A		28pcs
E		12pcs
H		6pcs

STEP15

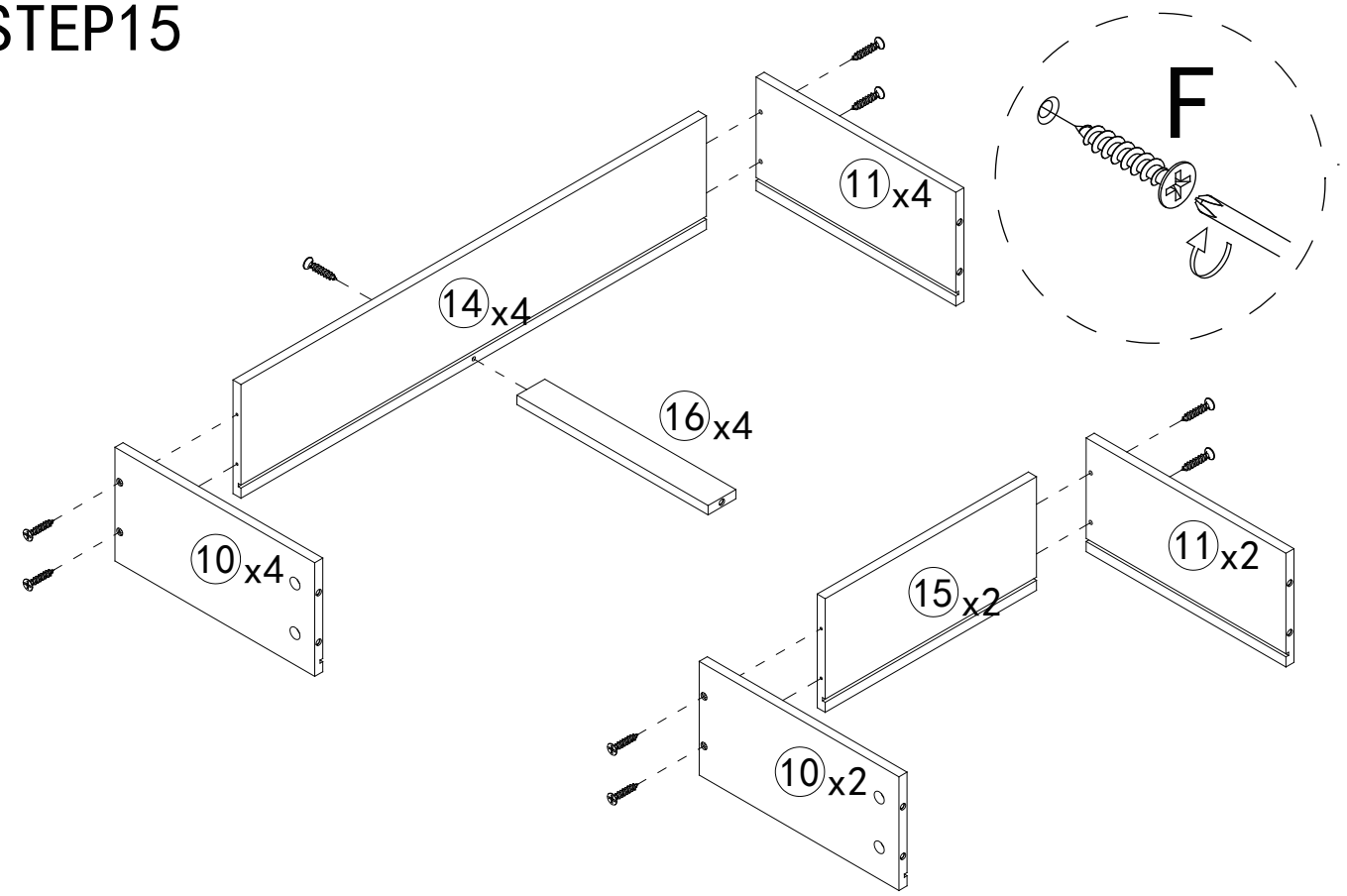

The side panels are flush with the bottom panel.

F	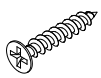	28pcs

STEP16

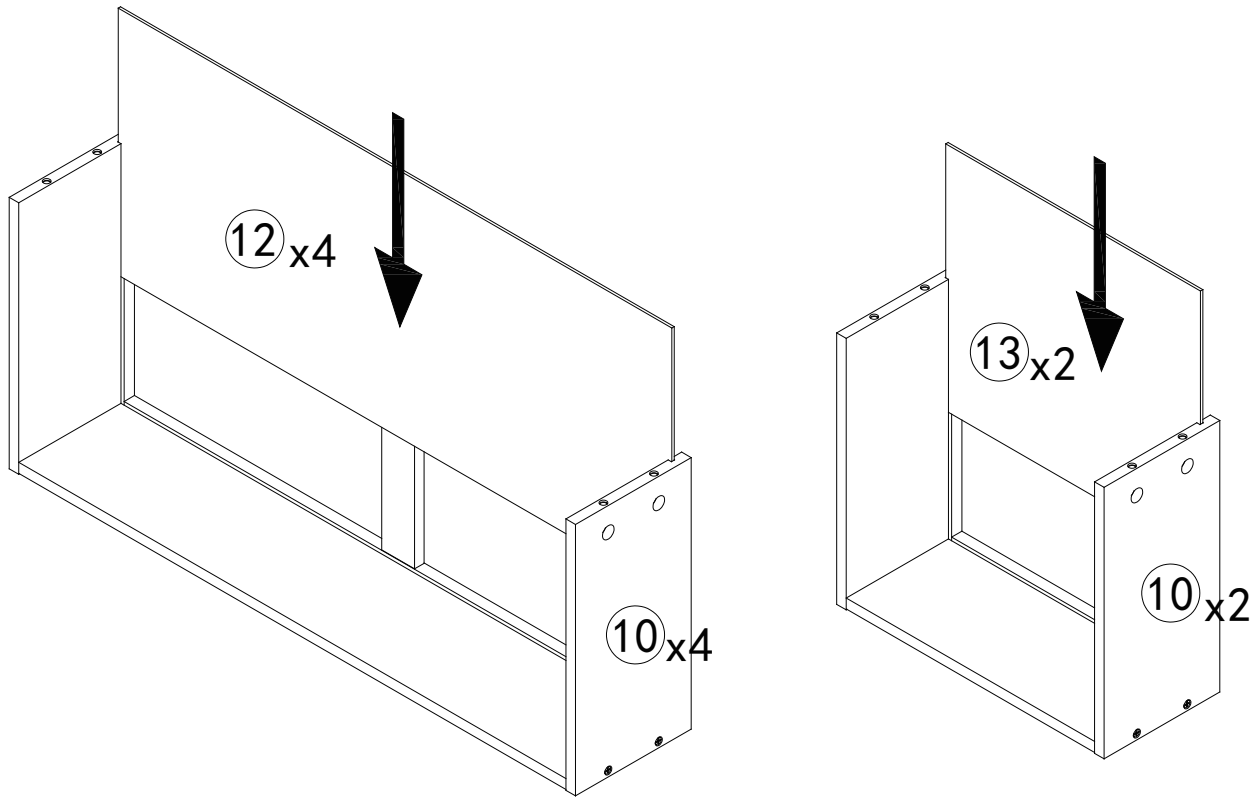

STEP17

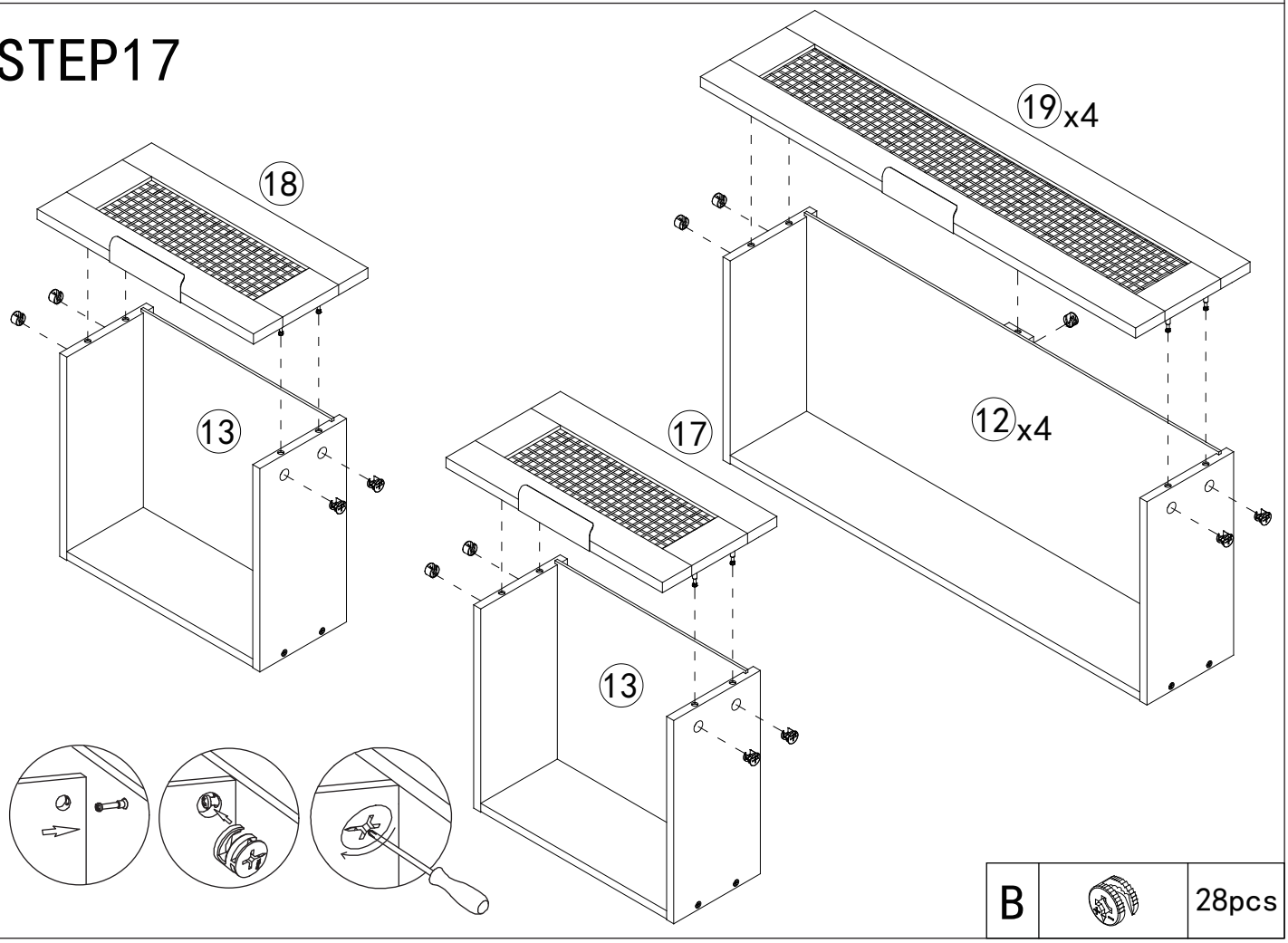

B		28pcs

STEP18

Pay attention to the hole position.

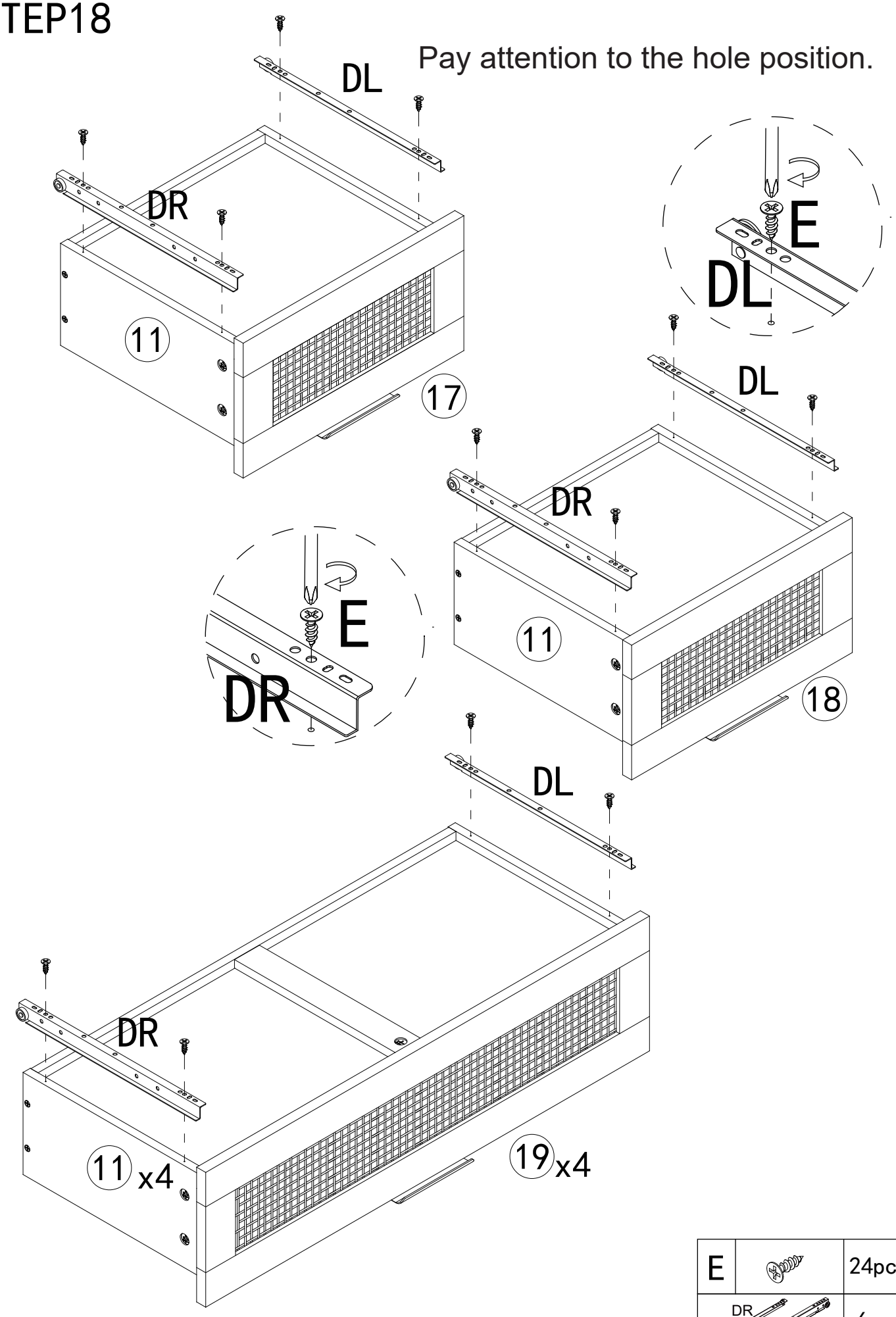

E		24pcs
DR DL		6pcs

STEP19

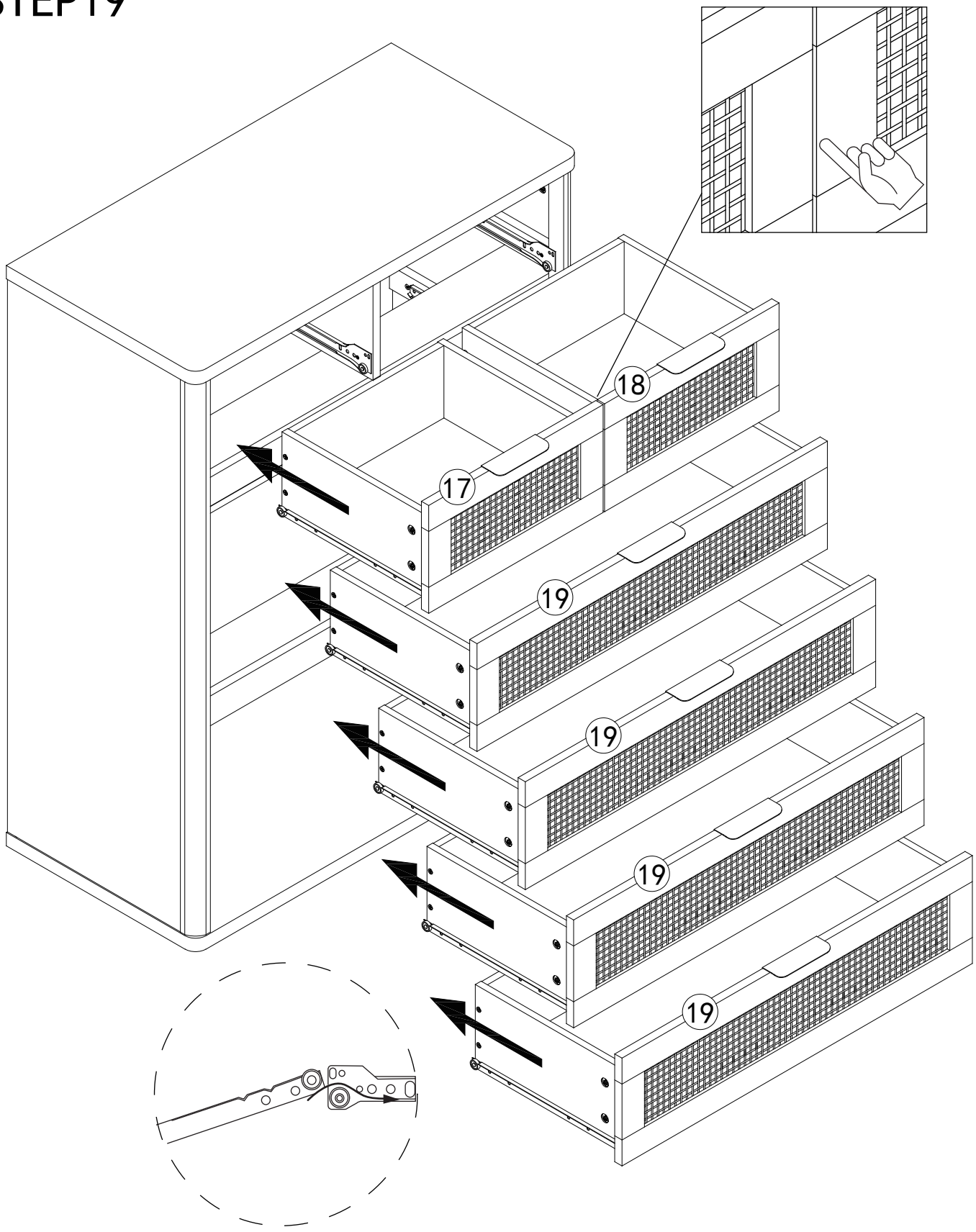

Note:Please insert thedrawer into thecorresponding position according to the number.

Note: When moving the cabinet, please lift it vertically off the ground. Dragging may cause loose connectors, affecting stability and service life.