Assembly Instructions

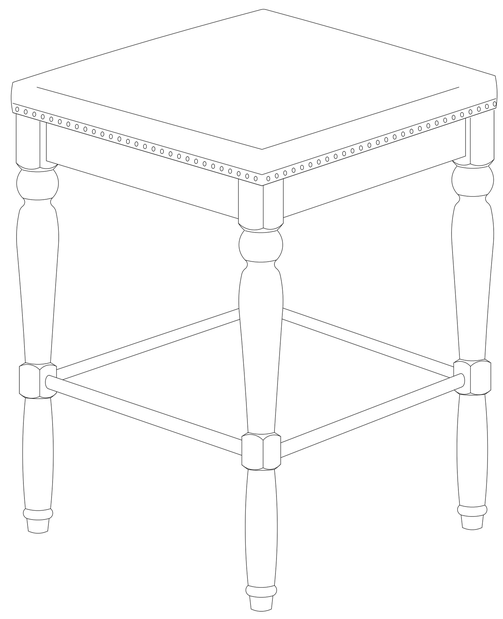

READ & SAVE THESE INSTRUCTIONS:
Please read instructions carefully and identify all parts before assembly

- Assemble your unit in area free from any objects that might scratch the surface of your unit
- Examine all packing materials before discarding, shortages may occur from parts left in the packing material
- Follow step by step instruction

PART LIST:

A	Cushion with Box Seat	1 SET
B	Leg	4 PCS
C	Stretcher	4 PCS

HARDWARE LIST:

1	JCBC Screw M6 x 60mm		8 PCS
2	Spring Washer M6 x 13mm		8 PCS
3	Flat Washer M7 x 19mm		8 PCS
4	Allen Key M4 x 55mm		1 PC
5	CSK Screw M4 x 38mm		8 PCS

A

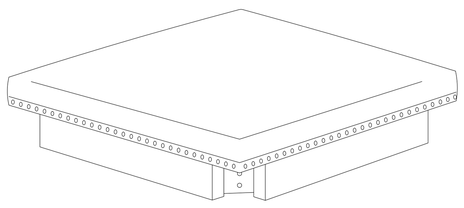

B

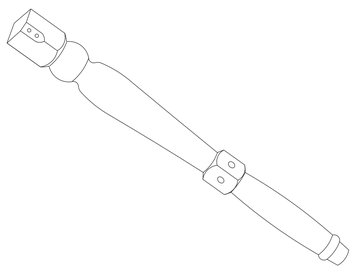

C

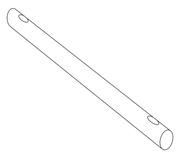

IMPORTANT NOTE:

- Place all wooden parts on a clean and smooth surface such as a rug or carpet to avoid the ports from being scratched. Check to be sure that you have all parts and hardware. Remove all wrapping materials, including staples & packing straps before you start to assemble. Do not tighten all screws/bolts until all completely assembled.
- Keep all hardware parts out of reach of children.
- **DO NOT TIGHTEN BOLTS/SCREWS UNTIL ALL COMPLETELY ASSEMBLED.**

Assembly Instructions

STEP 1

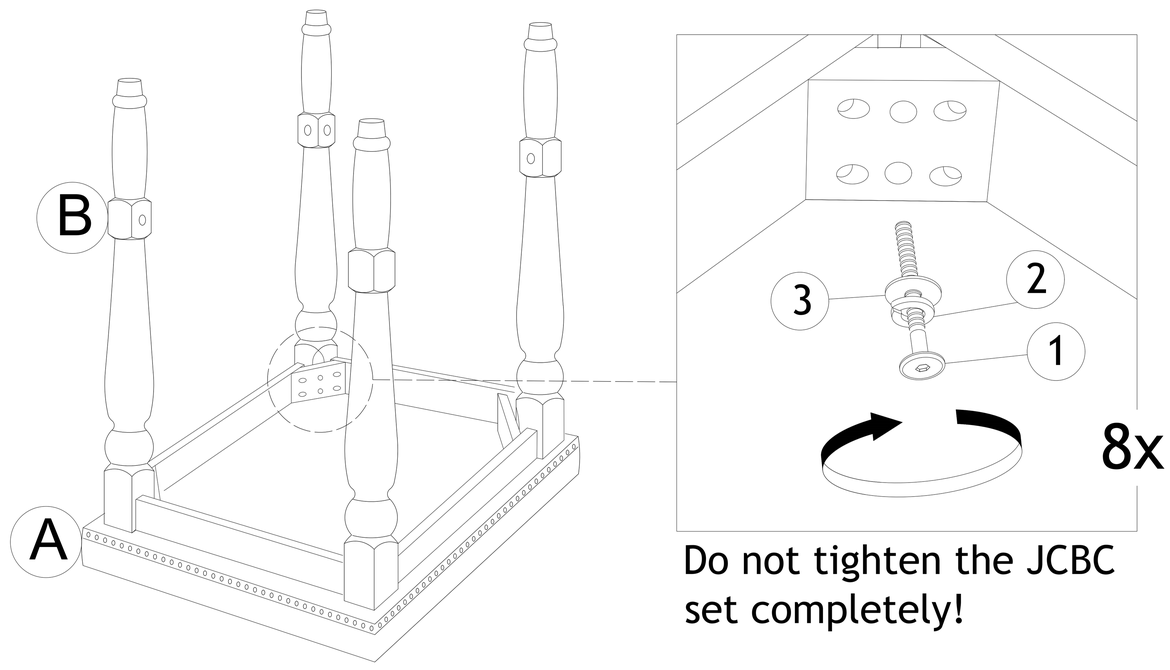

Do not tighten the JCBC set completely!

STEP 2

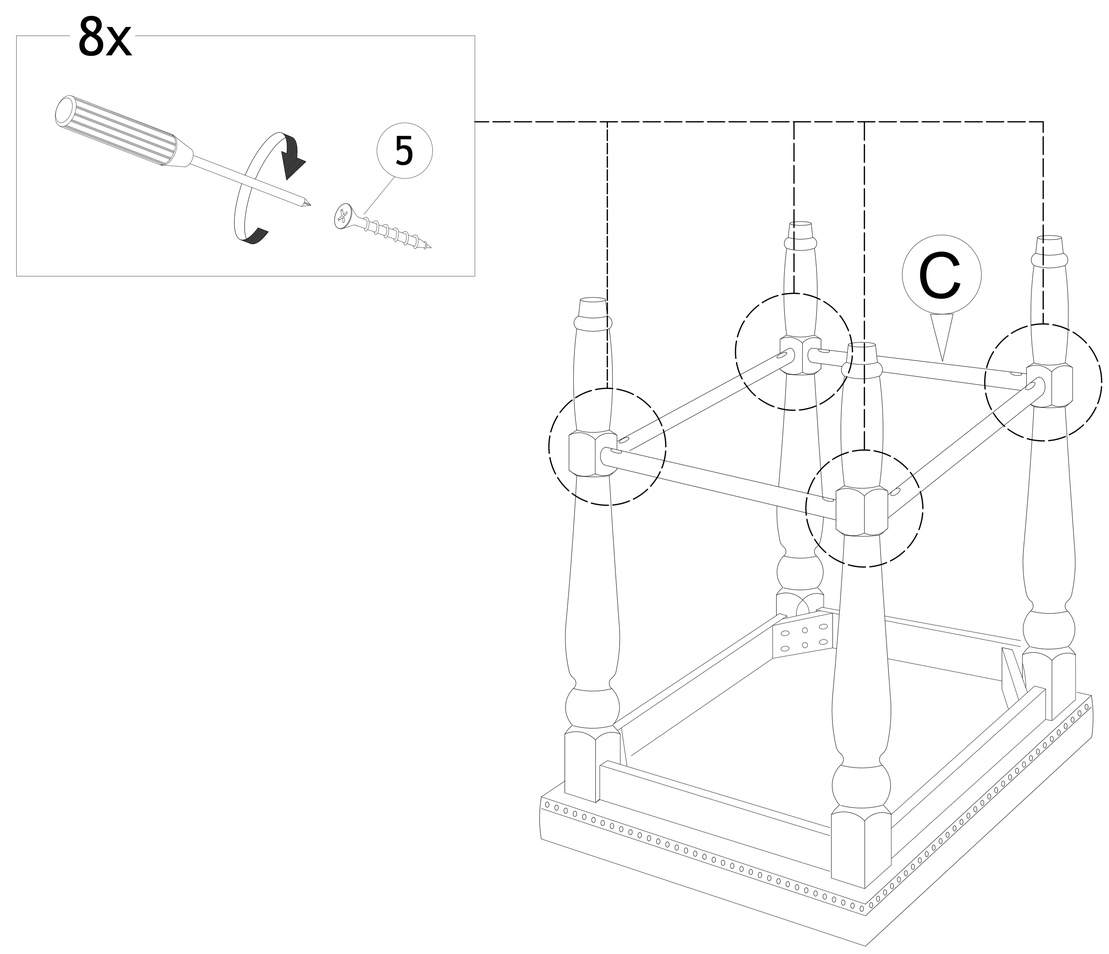

STEP 3

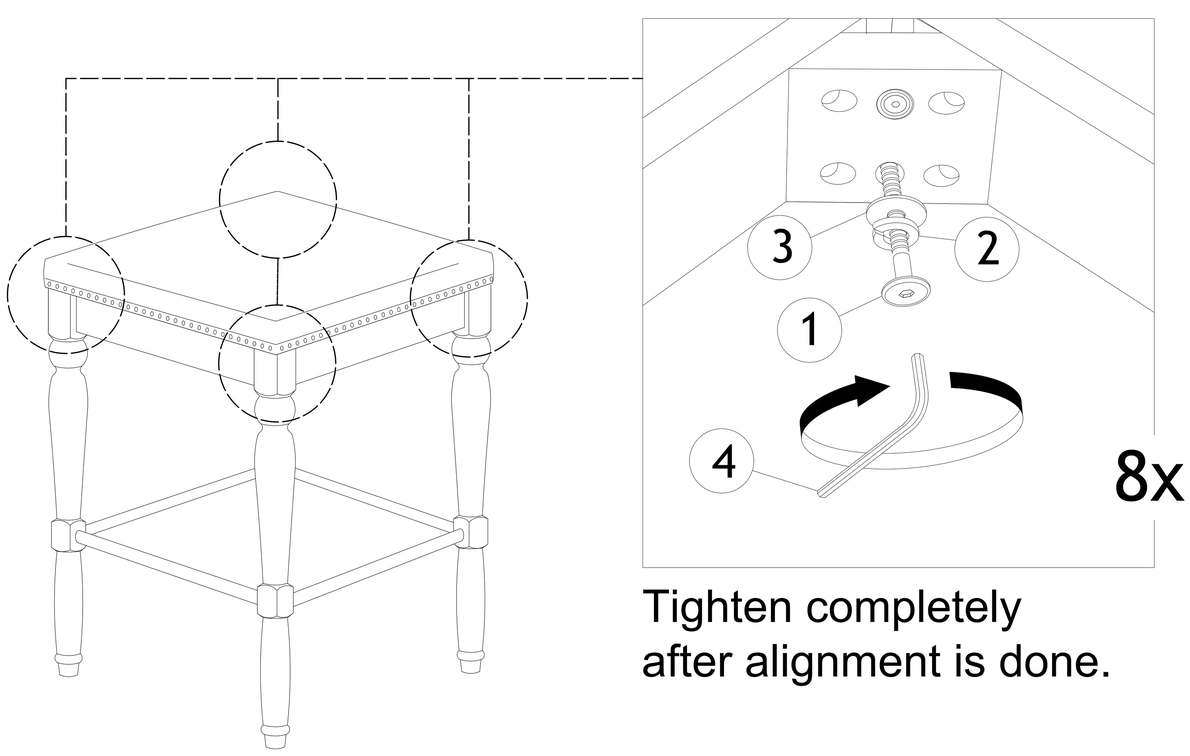

Tighten completely after alignment is done.

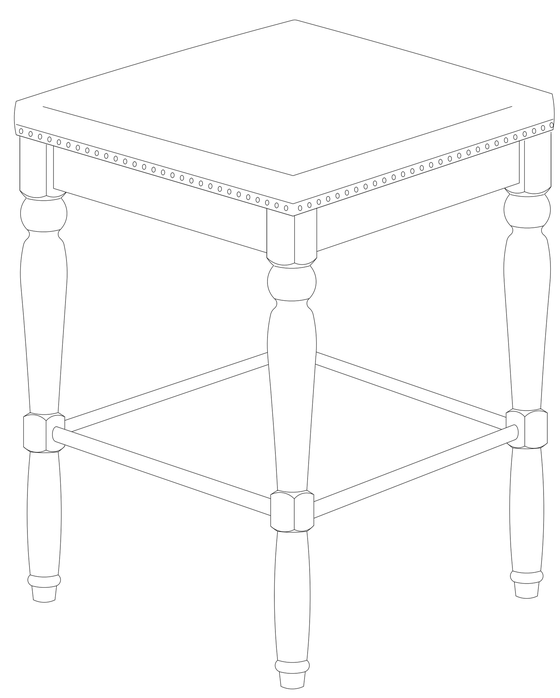

COMPLETE ASSEMBLY

CARE AND MAINTENANCE

- The touch of a soft cloth is all the maintenance your wood pieces will ever need. Never use harsh chemicals or abrasive cleaners, as they could mark or destroy finish.
- Bolts, screws, and nuts may loosen during everyday use. They should be periodically inspected and re-tightened. Always visually check that all hardware on the list is attached and kept tightened.