Assembly Instructions

SKU # 53006058
SKU # 53006059

PARTS LIST

A	BENCH SEAT X 1	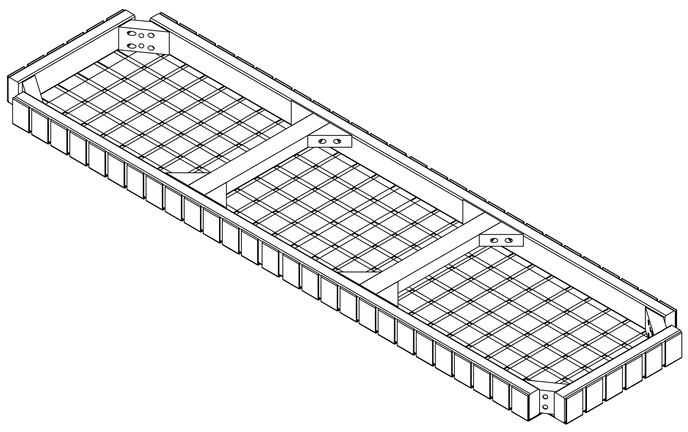	
B	LEGS X 4	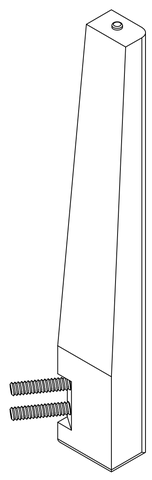	
Z	HARDWARE	Z1 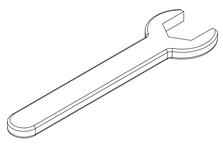 13 mm x1	Z2 8mm x8
		Z3 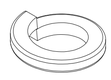 8 mm x8	Z4 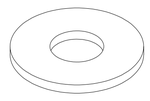 8 mm x8

Before beginning

1) Carefully unpack and position the item on a clean, non-marring surface to assemble.

2) Read this Assembly Instructions from beginning to end before starting to assemble.

3) Take an inventory of the required parts to ensure all are available.

4) To prevent accidental choking hazards, keep all packing materials away from small children.

5) Only tighten hardware until ALL hardware are fully engaged on their locations. Overtighten bolts will damage the bolt threads.

6) Use only factory provided hardware to assemble. Unapproved hardware can damage product or jeopardize the structural integrity of the product.

7) The use of power tool to assemble is not recommended due to high risk of over-torque, which can damage the product.

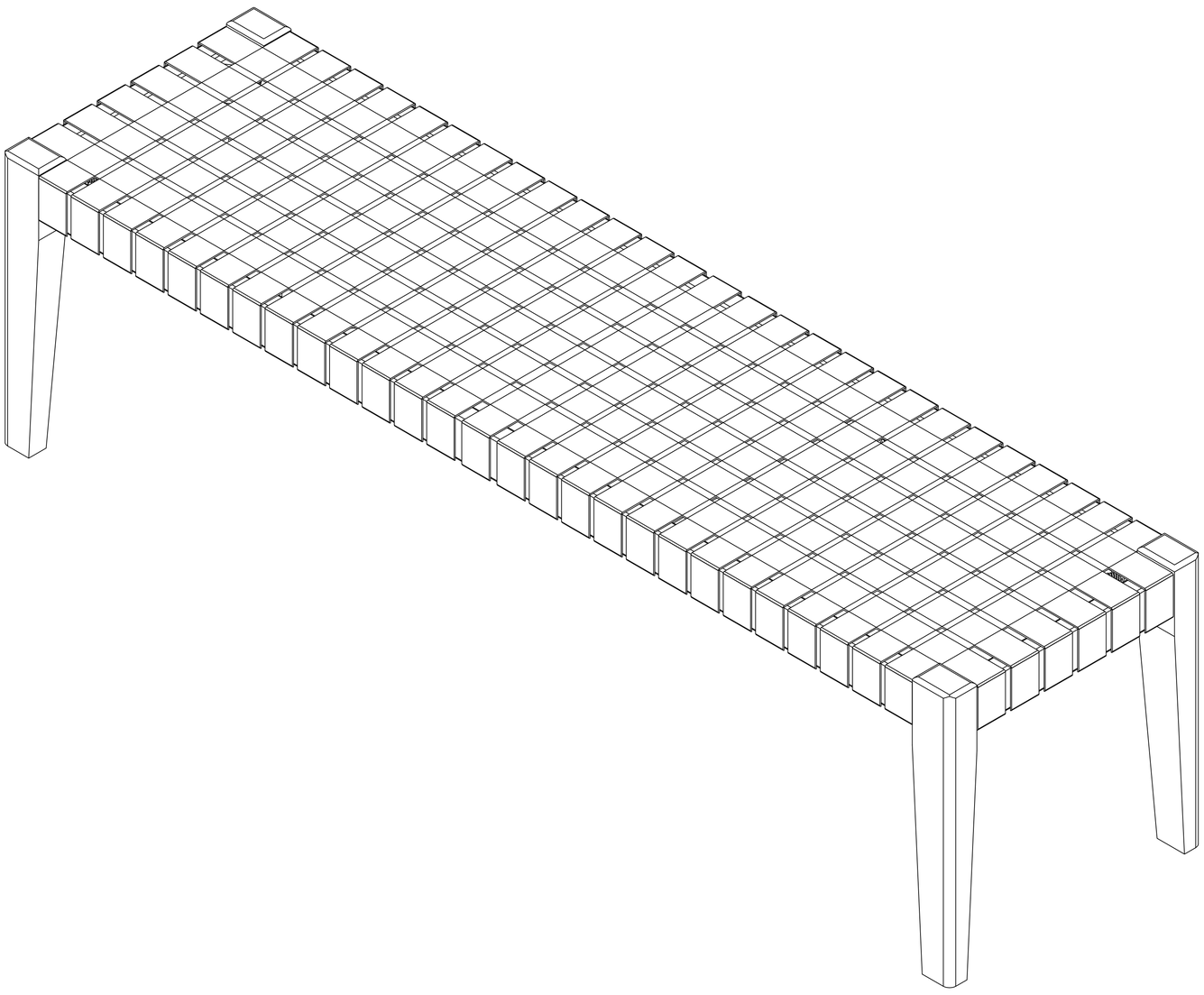

ASSEMBLY REQUIRES ONE PERSON

15 MINUTE ASSEMBLY TIME

KEEP INSTRUCTIONS FOR FUTURE USE

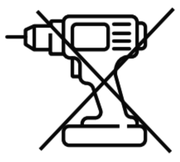

Assembly Instructions

SKU # 53006058

SKU # 53006059

1

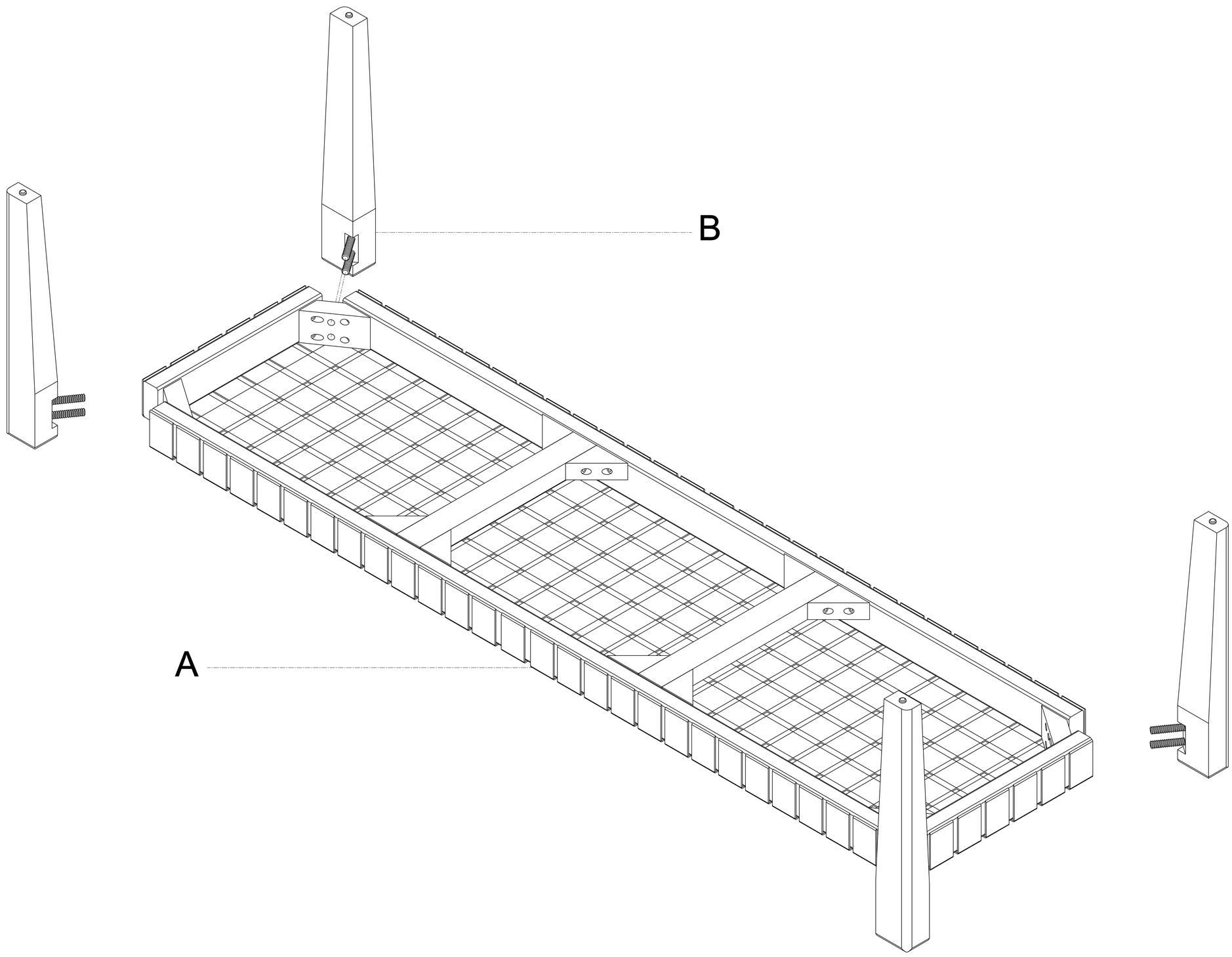

2

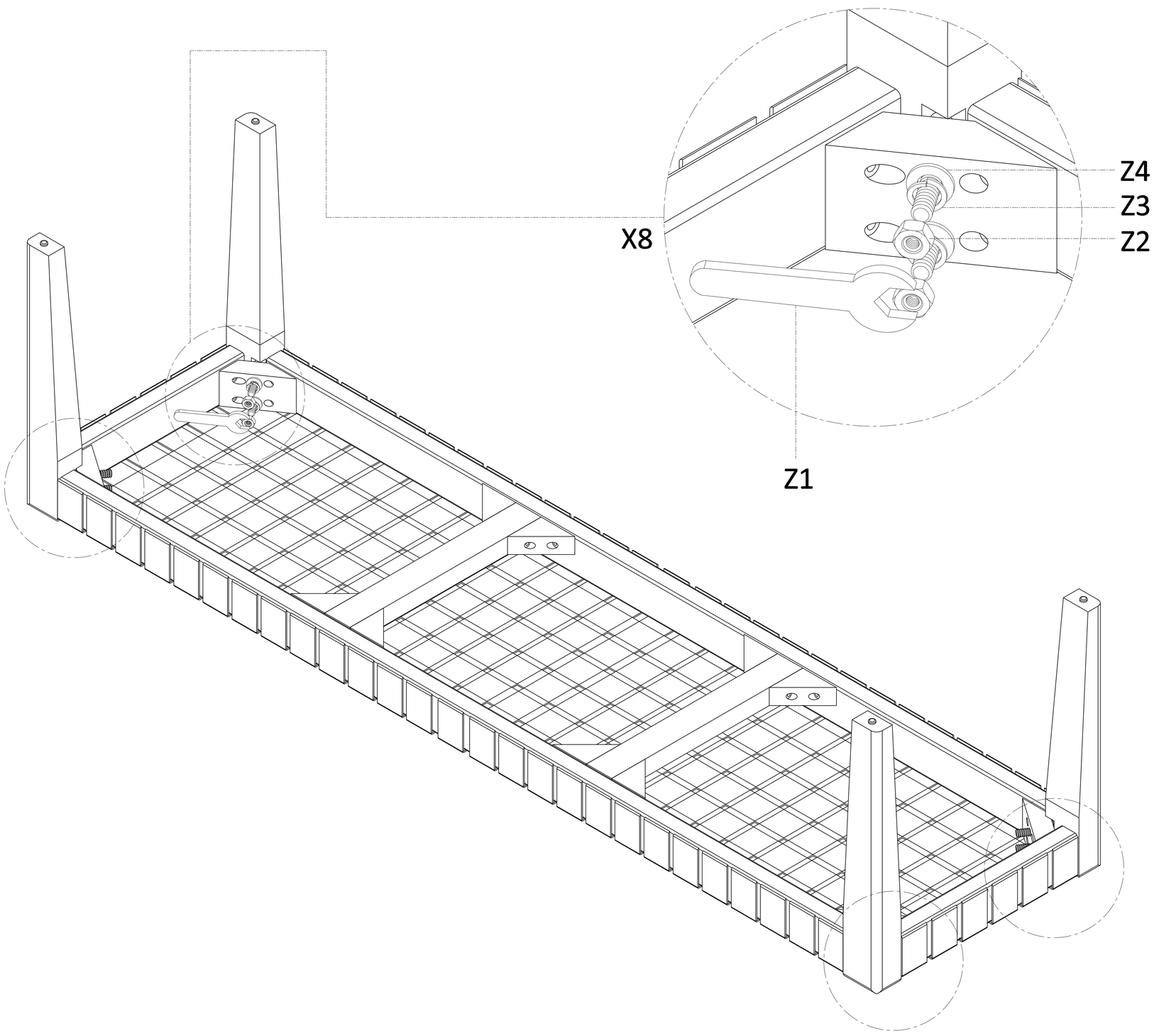

Assembly Instructions

SKU # 53006058

SKU # 53006059
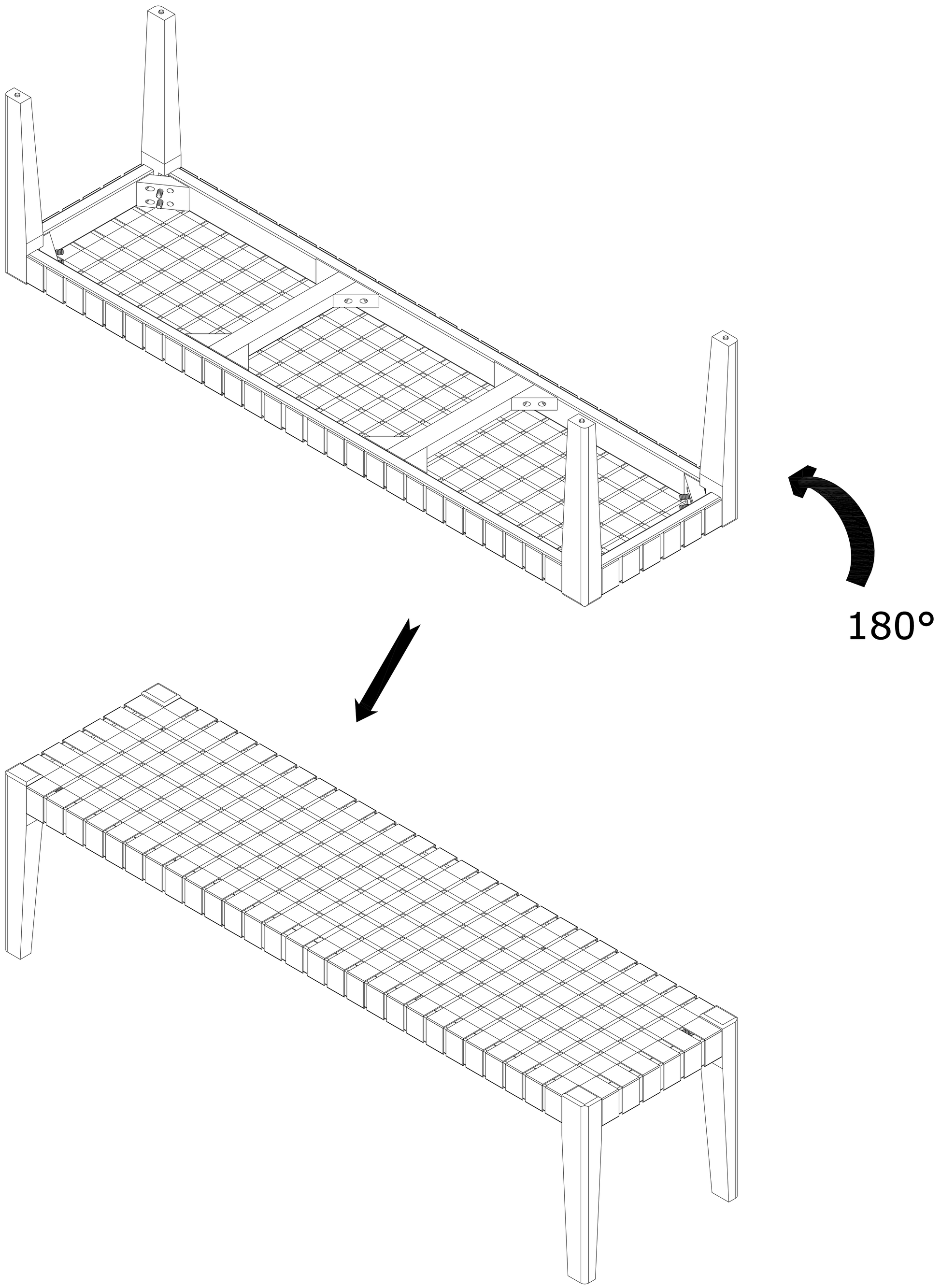
3