Installation Diagram

1

2

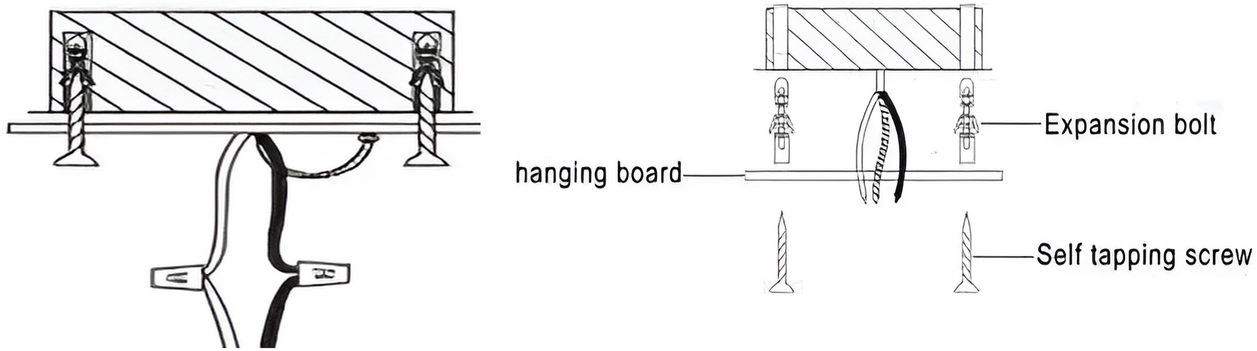

3

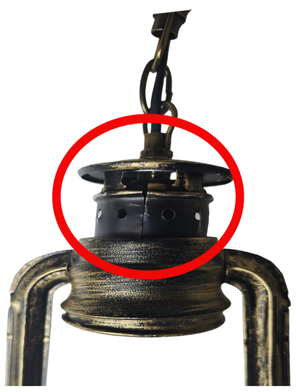

4

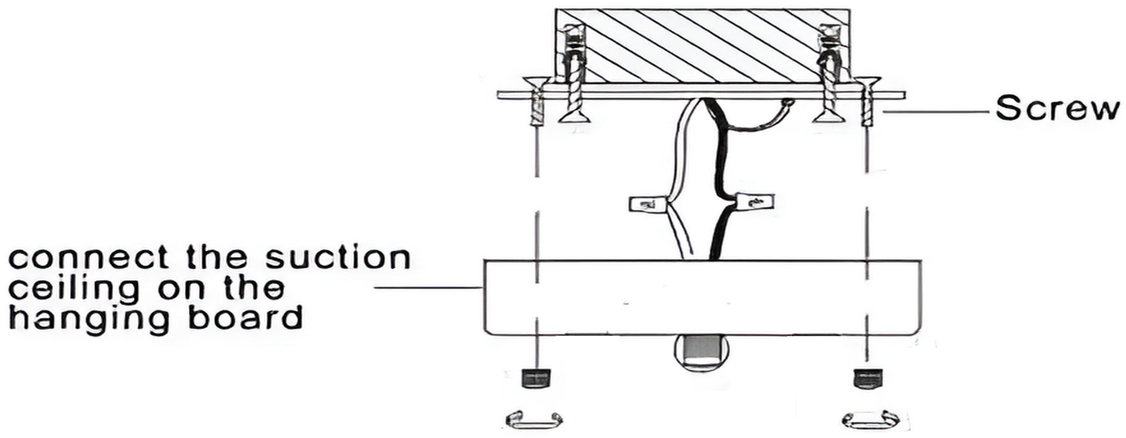

Kerosene Lamp Installation Diagram:

1. Press the semicircular metal lid firmly against the kerosene base and rotate it to snap it into place.
2. Position the glass lampshade with its smaller opening facing downward onto the shade holder.
3. Install the bulb and test for illumination. After confirming normal operation, disconnect the power source. The area marked with a circle can be stretched to facilitate glass shade installation.
4. The overall assembled kerosene lamp appears as shown in Figure 4.

Ceiling Mount Installation Diagram:

1. Secure the mounting plate to the ceiling using the installation screws.
2. Complete the electrical connections between the ceiling and the light fixture. Connect the ground wire to the mounting plate, then link the ground wire to the ceiling's grounding wire. Next, connect the fixture's live wire to the ceiling's live wire, followed by connecting the fixture's neutral wire to the ceiling's neutral wire. Refer to the diagram below for specific steps.
3.After aligning the mounting plate with the expansion bolts, place the washers and