DIMENSIONS

Rough-In Dimensions

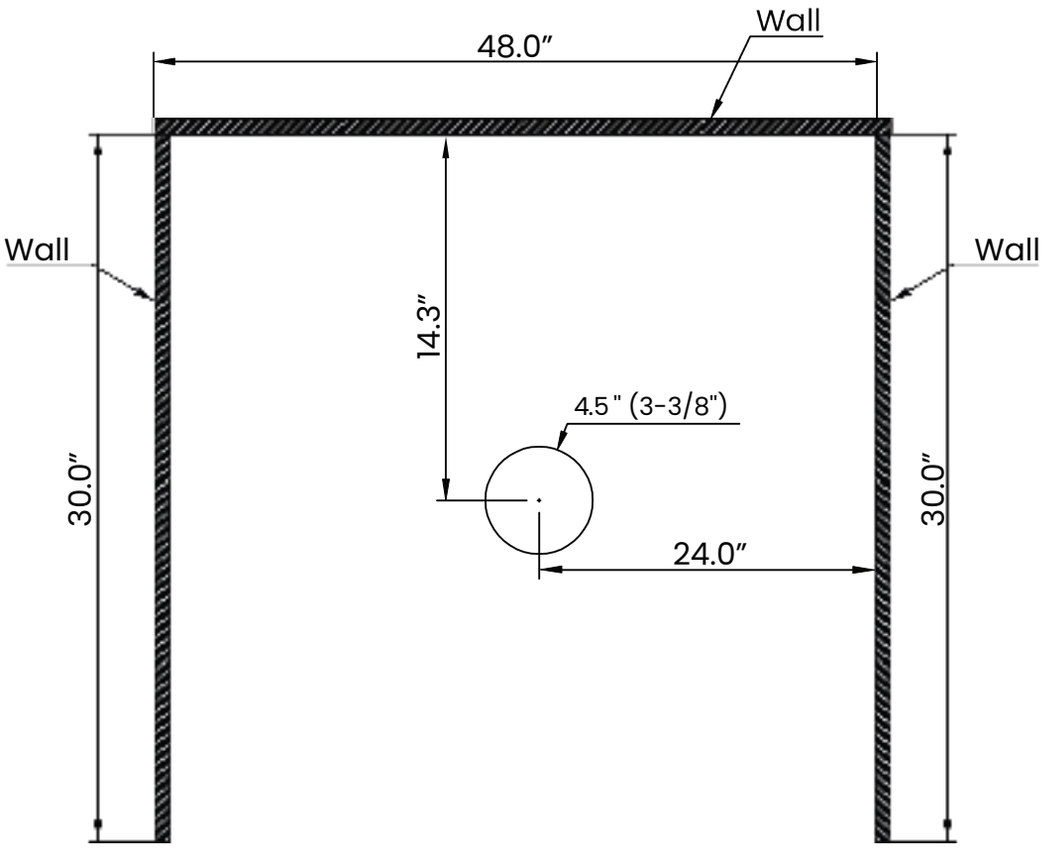

Product Dimensions

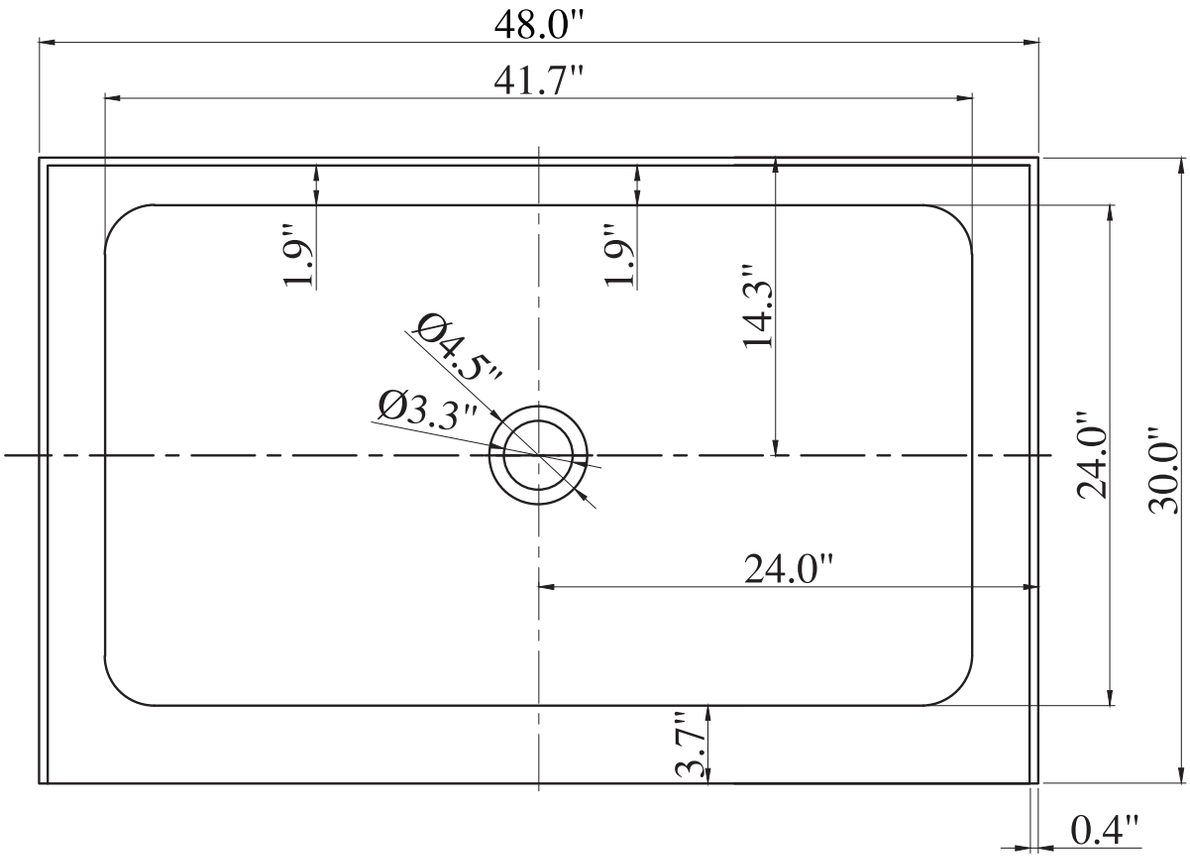

DIMENSIONS

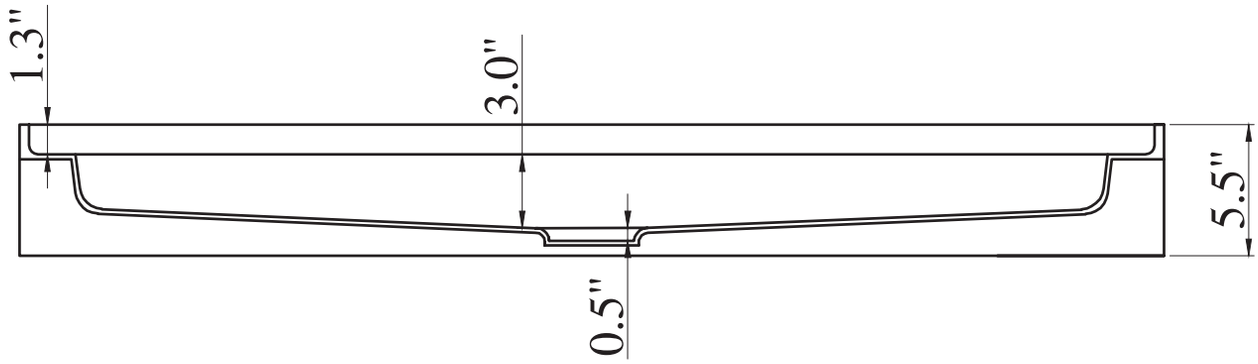

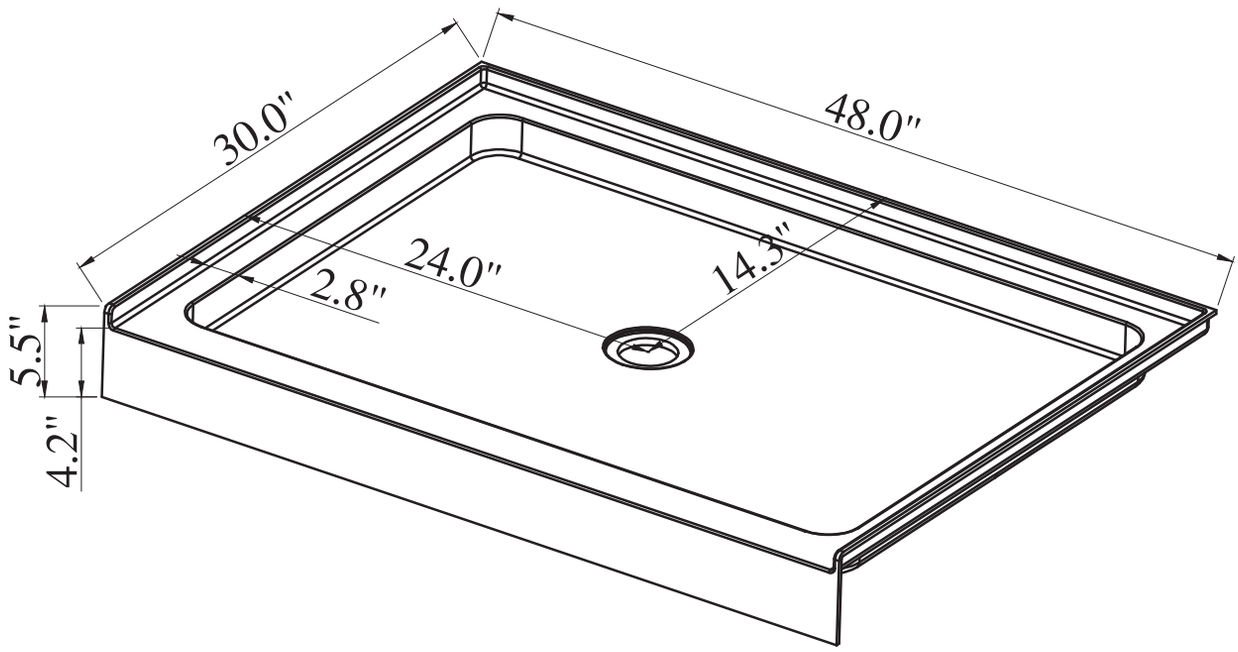
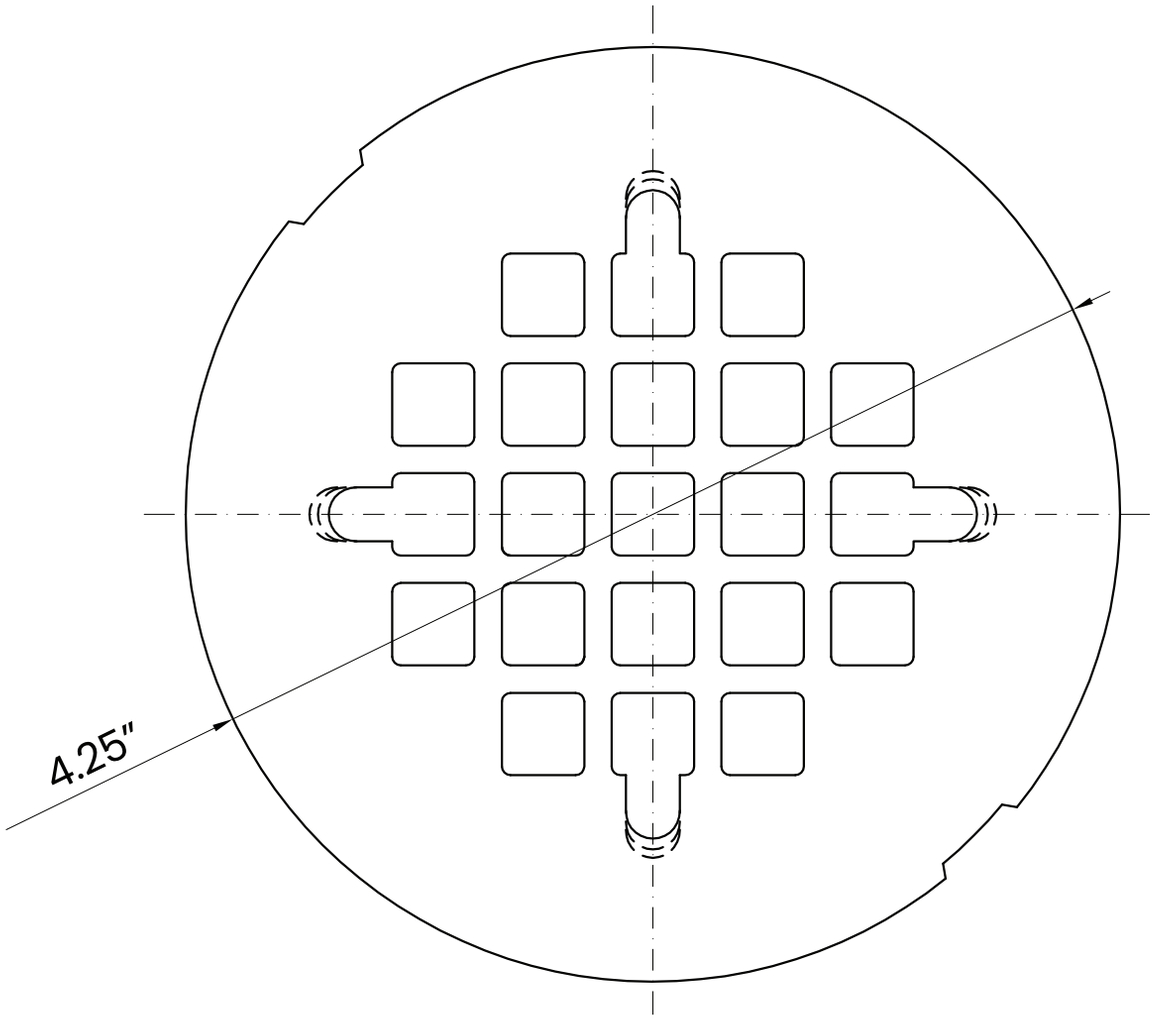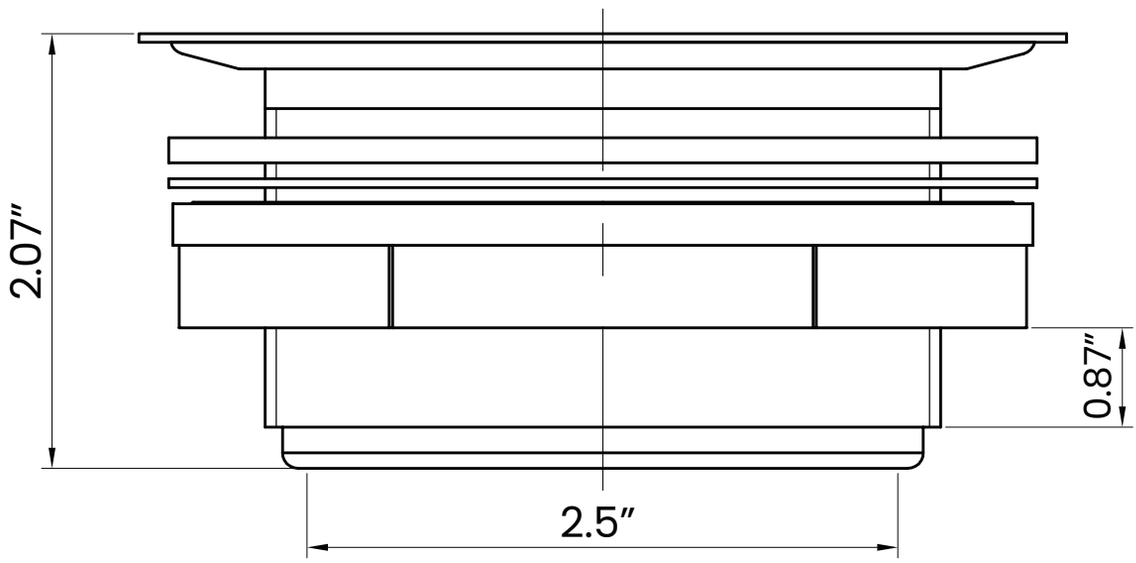
DIMENSIONS