Bed

Assembly Instruction – Please keep properly for future reference.

If you find any missing boxes, damaged parts, or accessory shortages, please contact the customer service team of your purchasing channel immediately. We will resolve the issue as quickly as possible.

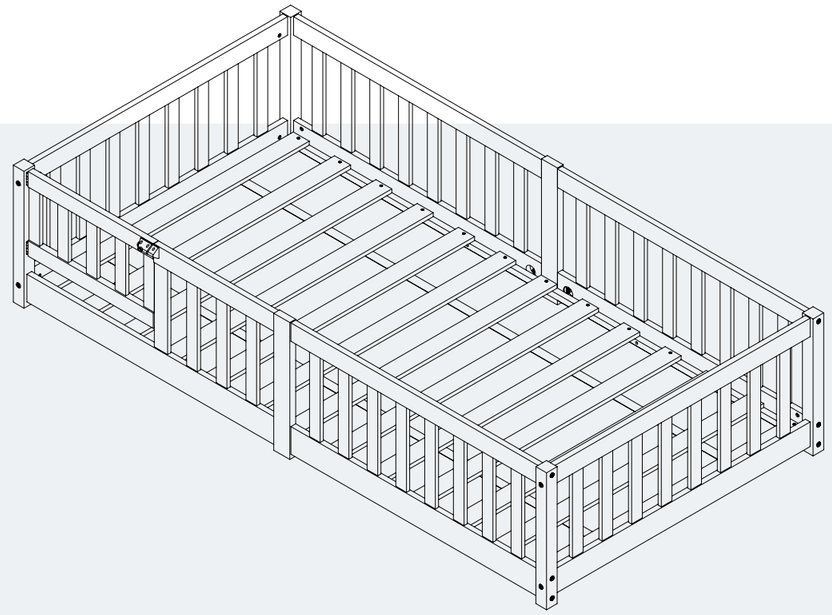

SKU:
C001521010
C001521020
C001521030

V1.0

EN

CONTACT US

- **Email: service@grandtunnel.com**
  In order to receive assistance more quickly, please provide

THE FOLLOWING INFORMATION:

- Order number
- Purchase platform
- Purchase date
- Detailed description of the issue along with photos (if applicable)

Important – Please read these instructions carefully before starting the installation.

Bed

Before Assembly

Thank you for choosing this product!
To ensure safe use and long-term maintenance, please read this manual carefully and keep it properly for future reference.

Important Notice:

- To ensure a smooth and successful installation, please read this guide carefully. It provides essential information about the required tools, materials, and assembly steps. Follow the instructions in each section to avoid any issues caused by improper installation.
- Please review all operational and safety guidelines to ensure proper and secure assembly.
- This guide reflects the most current product information available at the time of printing. We reserve the right to make changes to product features, packaging, or availability without prior notice.
- Before starting assembly, ensure that all necessary electrical and environmental preparations are completed.
- This manual contains important instructions regarding installation, cleaning, and maintenance. Please read it thoroughly and keep it for future reference.

Safety Warnings

1. Follow Warning Labels

Do not remove, alter, or obscure any warning labels on the product or packaging. Always adhere to the displayed safety instructions to ensure proper usage.

2. Conduct Regular Inspections

Periodically inspect all components to ensure they are properly installed, undamaged, and securely fastened. Report any issues to customer support immediately.

3. Practice Safe Usage

Avoid playing, jumping, or engaging in activities on or under the bed, as this may cause injury or structural damage.

4. Beware of Rope Hazards

Do not attach ropes, hooks, straps, or any non-designated accessories to any part of the bed, as this may pose a safety hazard.

Email : **service@grandtunnel.com**

5. Keep This Manual for Reference

Store this manual in a safe and accessible place for future reference.

6. Safety is a Shared Responsibility

Ensuring safety is a joint responsibility between the manufacturer and the user. Please follow all safety precautions during assembly and use.

Disclaimer

We are committed to delivering safe, high-quality, and reliable products to our customers. If you have any questions, concerns, or require further assistance, please contact our customer service team without hesitation.

Maintenance and Care Recommendations

1. Regular Cleaning

To maintain hygiene and prevent bacterial growth, clean the product regularly. Use a damp, well-wrung cloth to avoid excess moisture and prevent surface scratches.

2. Prevent Corrosion

Keep the product away from acidic or alkaline substances, as they may cause corrosion or damage to the materials.

3. Use Only Authorized Replacement Parts

Do not use unauthorized or third-party replacement parts, as they may compromise the product's safety and durability. If a replacement is needed, contact the manufacturer or an authorized dealer for approved parts.

4. Cleaning Precautions

Do not machine wash or rinse any part of the product directly with water, as this may damage the materials and reduce product lifespan.

5. Prevent Pests

Keep wooden furniture away from damp or humid areas to prevent pest infestations and wood damage. Use a dehumidifier or air conditioner during humid seasons to maintain a dry environment.

6. Protect from Sunlight

Avoid placing furniture in direct sunlight, as prolonged exposure may cause cracking, discoloration, or fading. If sunlight exposure is unavoidable, use curtains or shades to minimize damage.

Email : **service@grandtunnel.com**

EN

7. Keep Away from Fire
Position furniture away from heat sources and open flames to prevent damage and maintain its condition.

8. Perform Regular Care
Apply furniture oil periodically to maintain the wood's shine, prevent cracks, and extend its lifespan.

9. Clean Frequently
Regularly vacuum dust and debris, especially underneath furniture, to keep it clean and hygienic.

10. Maintain a Dry Environment
Ensure good ventilation to prevent moisture buildup, which can damage wood. Use a dehumidifier if necessary to protect the furniture.

11. Avoid Corrosive Liquids
Keep furniture away from acidic or alkaline substances, as these can damage the surface and reduce durability.

12. Use a Damp Cloth for Cleaning
Wipe furniture with a well-wrung damp cloth to prevent water damage or swelling. Avoid excessive moisture exposure.

13. Limit Sun Exposure
Excessive sunlight can dry out and weaken wood. Position furniture in shaded areas or use UV-blocking curtains to protect it from damage.

Email : **service@grandtunnel.com**

WARNING:

Adult assembly required.
Keep children away during assembly.
Do not allow children to use the product until fully assembled.

WARNING:

Infants Have Died In Toddler Beds From Entrapment.
- Openings in and between bed parts can entrap head and neck of a small child.
- NEVER use bed with children younger than 15 months.
- ALWAYS follow assembly instructions

Strangulation Hazard
- NEVER place bed near windows where cords from blinds or drapes may strangle a child.
- NEVER suspend strings over bed.
- NEVER place items with a string, cord, or ribbon, such as hood strings or pacifier cords, around a child's neck. These items may catch on bed parts.

Entrapment Hazard-To avoid dangerous gaps, any mattress used in this bed shall be a Twin-size mattress at least 75 in. (1905 mm) in length, 39 in. (990 mm) in width, and a max thickness of 6 in. (152.4 mm).

To prevent structural failure and risk of injury, this toddler bed is intended for use by a child weighing no more than 200 lbs (90 kg).

Adult assembly required.

Do not place the child's bed close to heat sources, windows or other furniture.

Do not use the child's bed if any part is damaged, torn or missing.

Email : **service@grandtunnel.com**

EN

Customer Service Guide

Thank you for choosing our product! We are committed to providing you with excellent service. If you find any missing parts, damaged packaging, or product damage after receiving all packages, please follow the steps below to quickly contact our customer service team. We will do our best to resolve your issue.

1. Missing Parts

Verify Parts:

1. Refer to the “Parts List” in the manual to verify the name, specifications, and quantity of the missing parts.
2. Take a clear photo of the parts list and mark the missing parts with detailed information, e.g., “Missing 5 pieces of M6×30mm screws.”

Contact Us:

By Email:
Send an email to **service@grandtunnel.com**, with the subject line “Missing Parts Issue.” Include the following in the email:

- A description of the missing parts and a photo of the parts list.
- Order details (order number, purchase platform, purchase date).

2. Product or Packaging Damage

If it affects normal use:

Steps:
1. Take clear photos or videos showing the damaged parts and the extent of the damage (multi-angle shots are recommended).
2. Email the photos/videos along with order details to **service@grandtunnel.com**, with the subject line “Product Damage Issue.”

Resolution:
After verification, we will arrange for a replacement part, product exchange, or refund as quickly as possible.

If it does not affect normal use:

Steps:
1. Contact our customer service team (by email: **service@grandtunnel.com**).
2. Provide a description of the damage and include relevant photos or videos.

EN

Resolution:
We will provide repair guidance or an appropriate compensation plan based on the specific situation.

Contact Us:

Customer Service Email: **service@grandtunnel.com**

Helpful Tips

To process your issue efficiently, please prepare the following information:

- Order details (order number, purchase platform, purchase date).
- Clear photos or videos.
- We are committed to providing quick and professional solutions, no matter the size of the issue, to ensure your satisfaction.

Thank you for your trust and support!
We hope you enjoy using our product!

Email : **service@grandtunnel.com**

Parts List

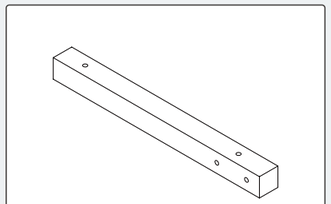
01 x1

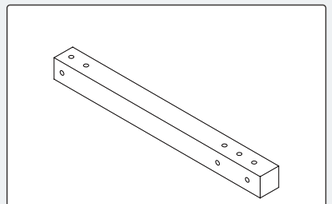
02 x2

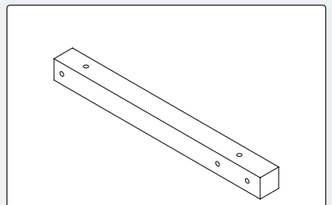
03 x1

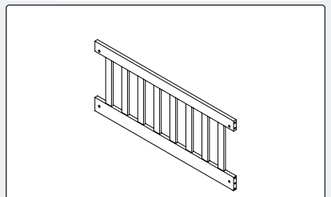
04 x2

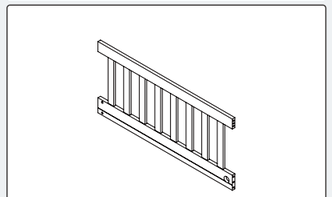
05 x1

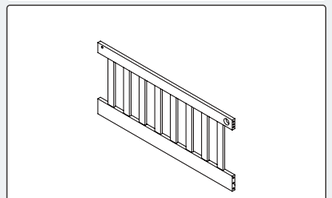
06 x1

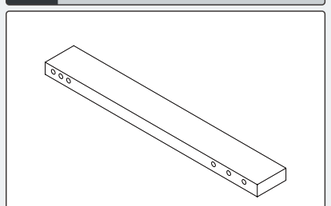
07 x2

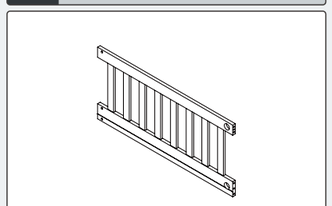
08 x1

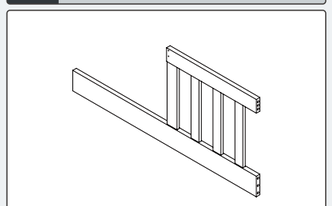
09 x1

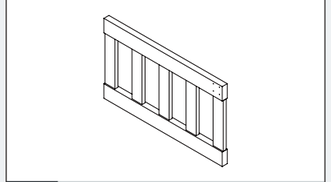
10 x1

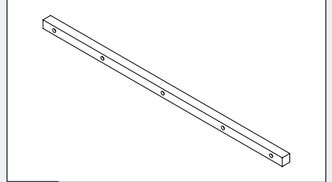
11 x6

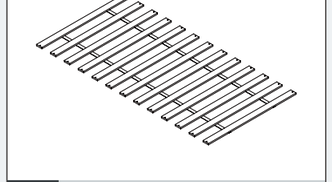
12 x1

Email : **service@grandtunnel.com**

Hardware List


A M6*80mm x19


B x19


C Φ8*30mm x35

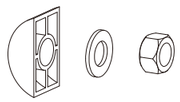
D x8

E M6*140mm x4


F x2


G Φ4*30mm x30


L Φ3*30mm x34

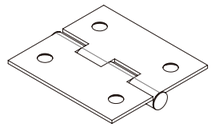
M x2


N Φ3.5*16mm x6

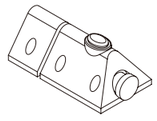
O Φ3.5*16mm x1


P x4


Q x1

Email : **service@grandtunnel.com**

EN

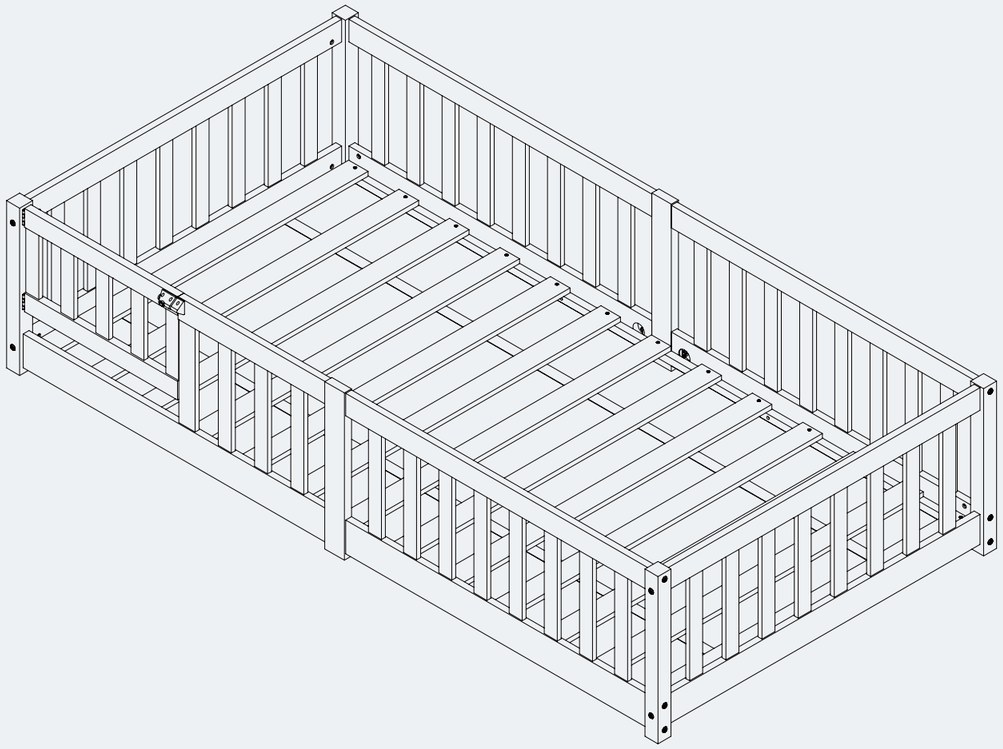

Important:
In each of the previous steps, tighten all screws to approximately 70% to stabilise the overall frame during assembly. Do not fully tighten any screws until the final step is completed.

Tools & Equipment



2 people needed

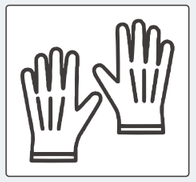

Work gloves



Tape measure



Other Tools Required
Phillips Screwdriver

Email : **service@grandtunnel.com**

Assembly Instructions

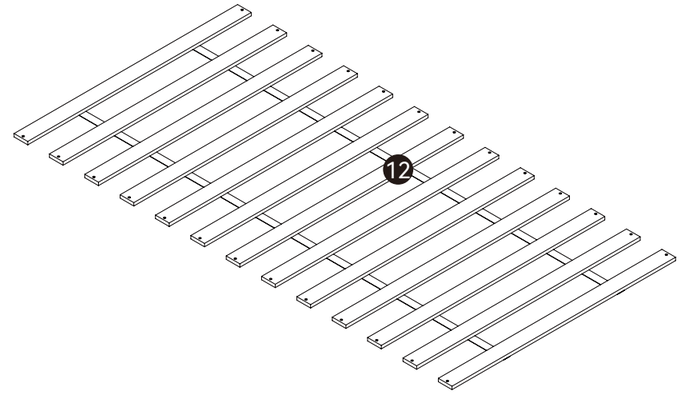

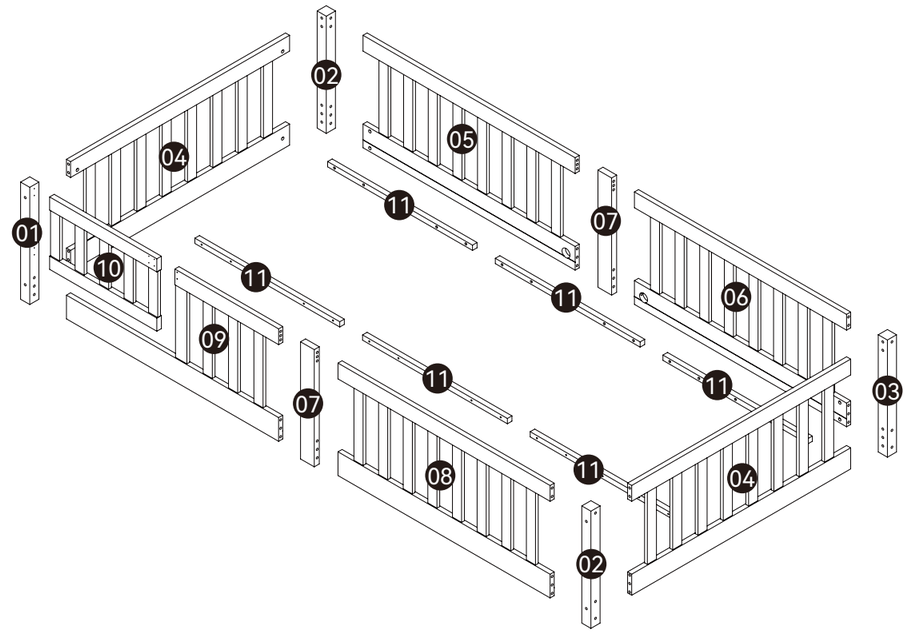

Email : **service@grandtunnel.com**

EN

Step 1

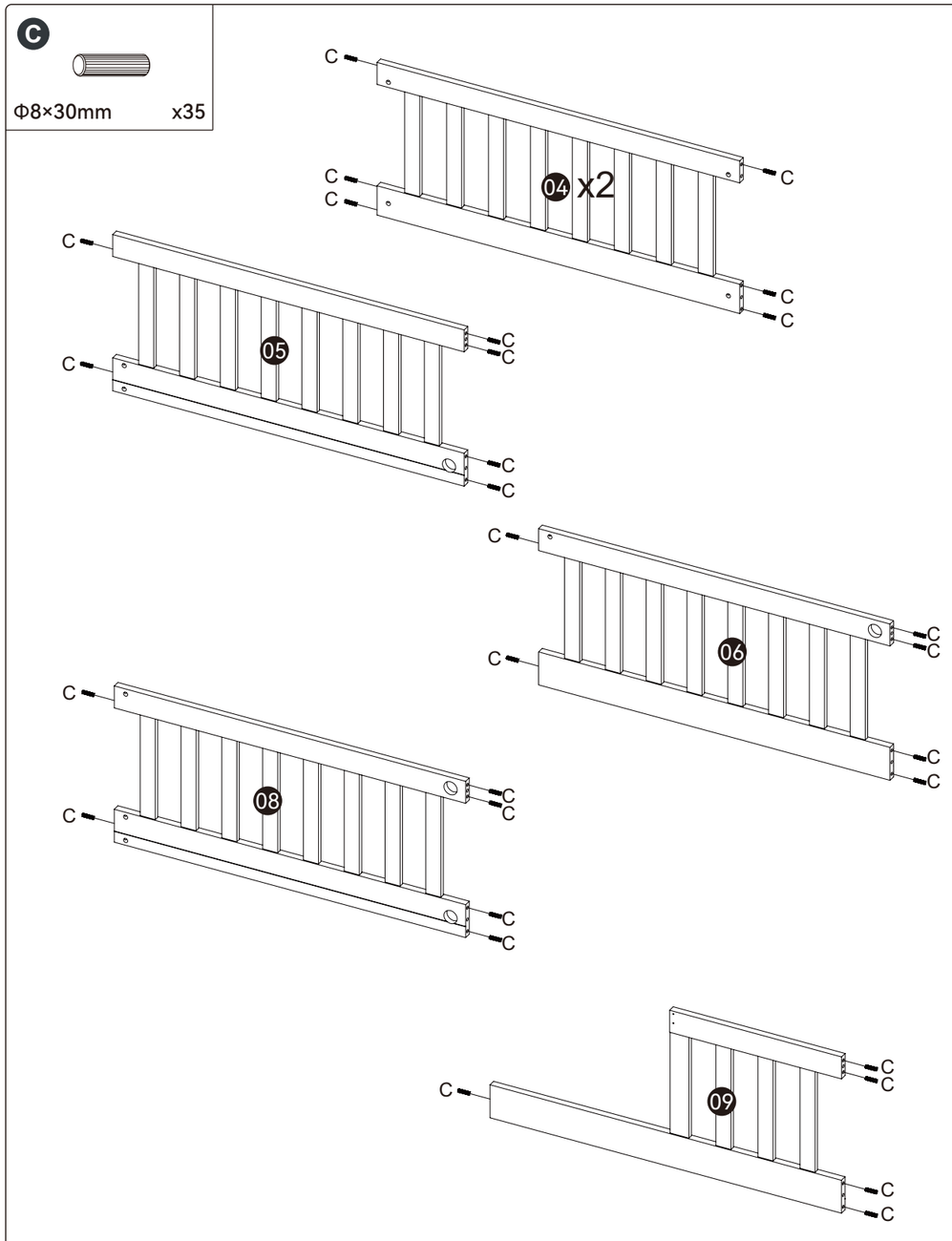

Pre-install wooden dowel Part (C) into the corresponding holes on headboard Part (04) and guardrails Part (05/06/08/09).

Email : **service@grandtunnel.com**

Step 2

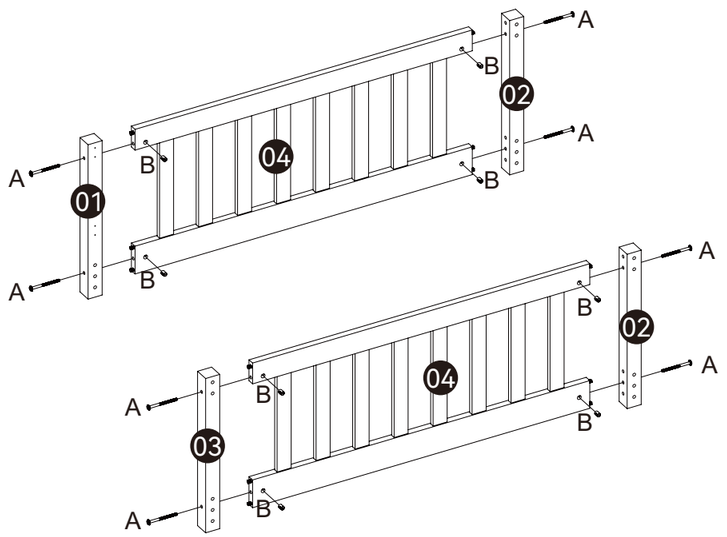

Connect bed legs Part (01) and Part (02) through headboard Part (04).
Connect bed legs Part (02) and Part (03) through headboard Part (04) as well.
Secure with bolt Part (A) and barrel nut Part (B).

Step 3

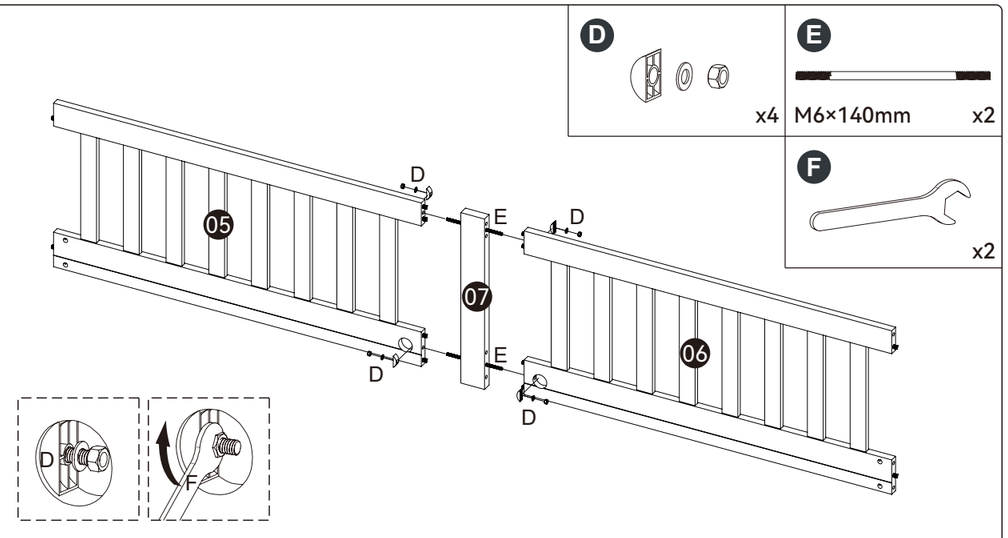

Connect guardrail Part (05/06) to center leg Part (07) as shown in the illustration. Use bolt Part (E) to connect and half-moon connector Part (D) to secure. Tighten with wrench tool Part (F).

Email : **service@grandtunnel.com**

EN

Step 4

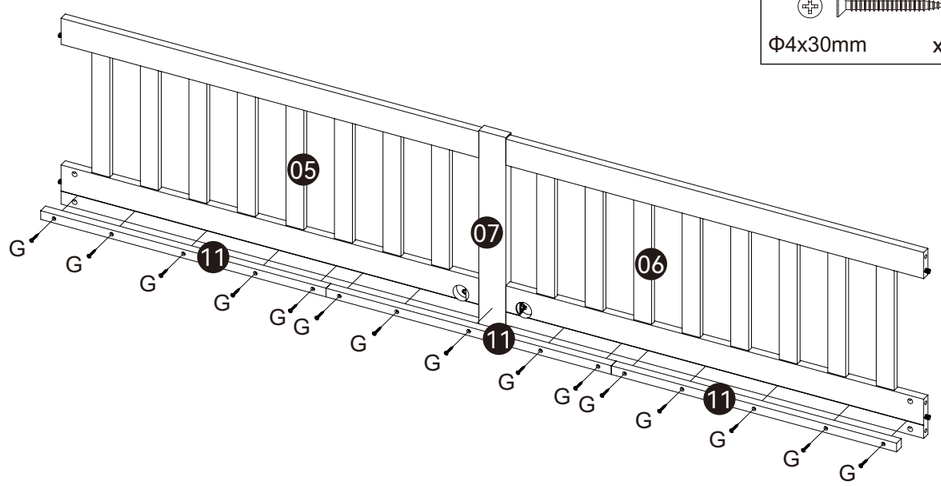

Attach bed side strip Part (11) to the assembled rear bed side Part (05/06/07) using self-tapping screw Part (G).

Step 5

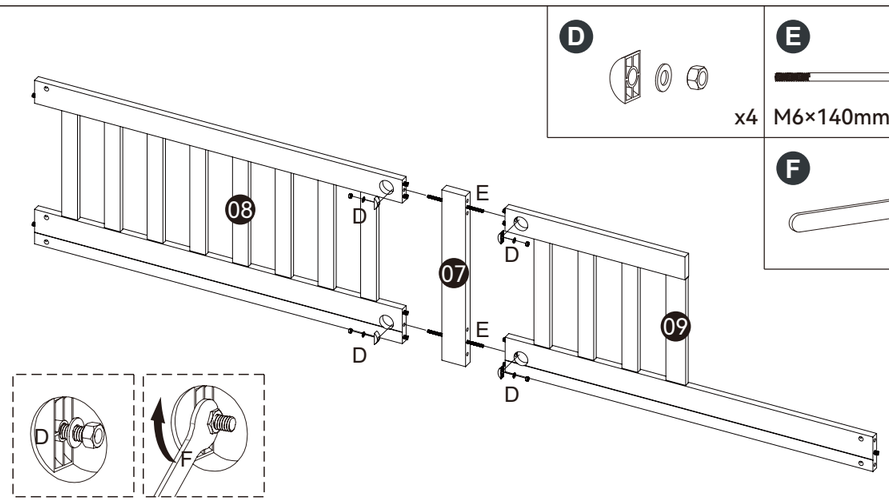

Connect guardrail Part (08/09) to center leg Part (07) as shown in the illustration. Use bolt Part (E) to connect and half-moon connector Part (D) to secure. Tighten with wrench tool Part (F).

Email : **service@grandtunnel.com**

Step 6

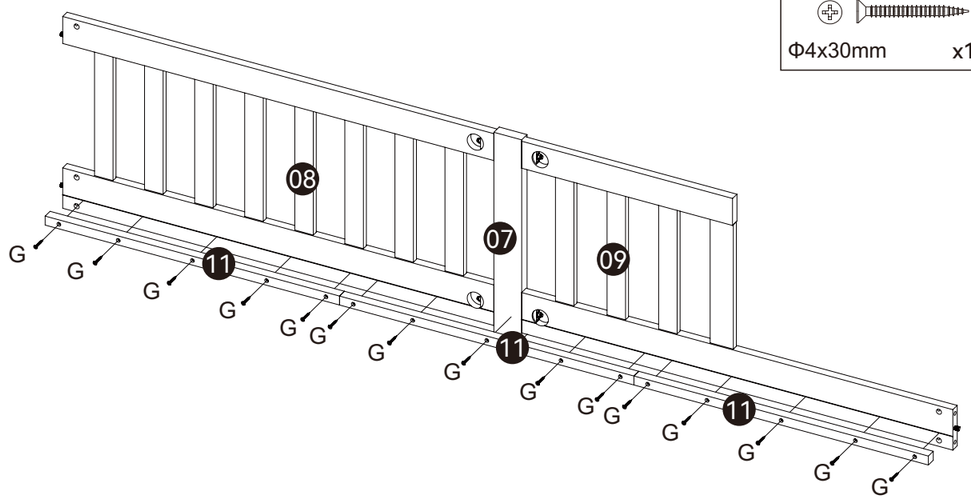

Attach bed side strip Part (11) to the assembled front bed side Part (07/08/09) using self-tapping screw Part (G).

Step 7

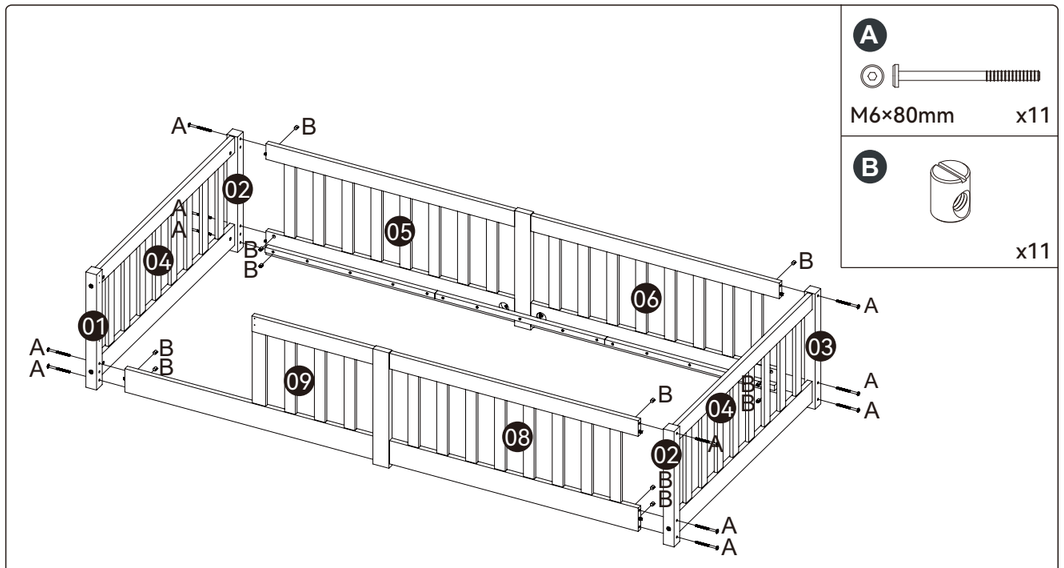

Connect the assembled left headboard Part (01/02/04) and right headboard Part (02/03/04) to the rear bed side Part (05/06/07) and front bed side Part (07/08/09). Secure with bolt Part (A) and barrel nut Part (B).

Email : **service@grandtunnel.com**

EN

Step 8

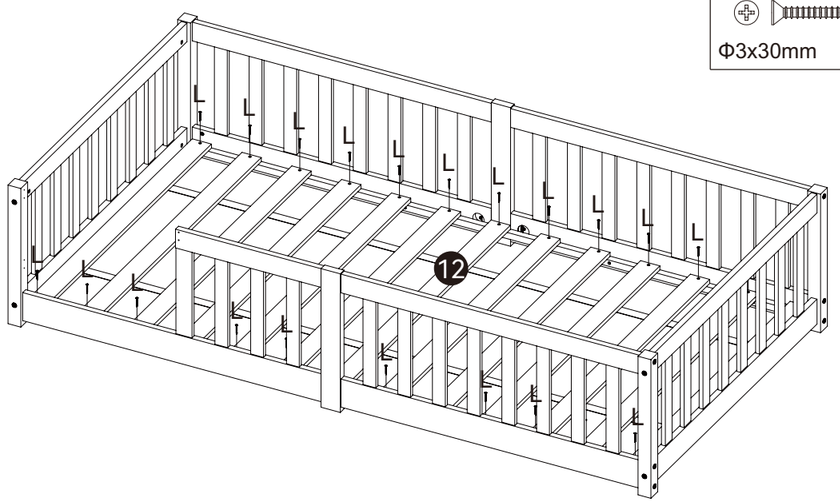

L
Φ3x30mm x26

Place bed board Part (12) in position and secure with self-tapping screw Part (L).

Step 9

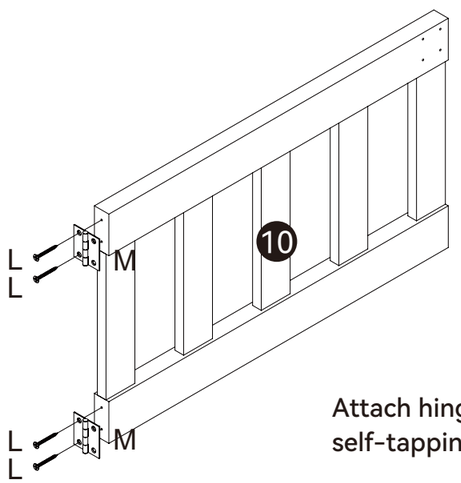

L
Φ3x30mm x4

M
x2

Attach hinge Part (M) to door Part (10) using self-tapping screw Part (L).

Email : **service@grandtunnel.com**

Step 10

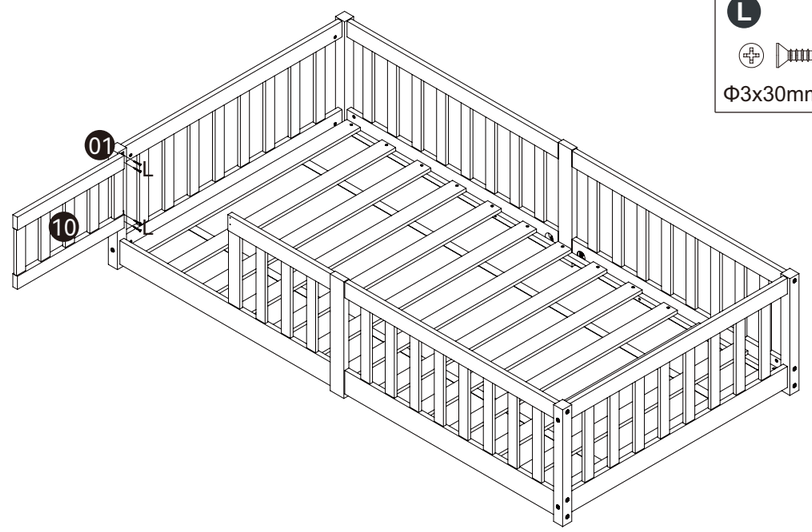

L
Φ3x30mm x4

Attach the hinge Part (M) on the assembled door Part (10) to bed leg Part (01) using self-tapping screw Part (L).

Step 11

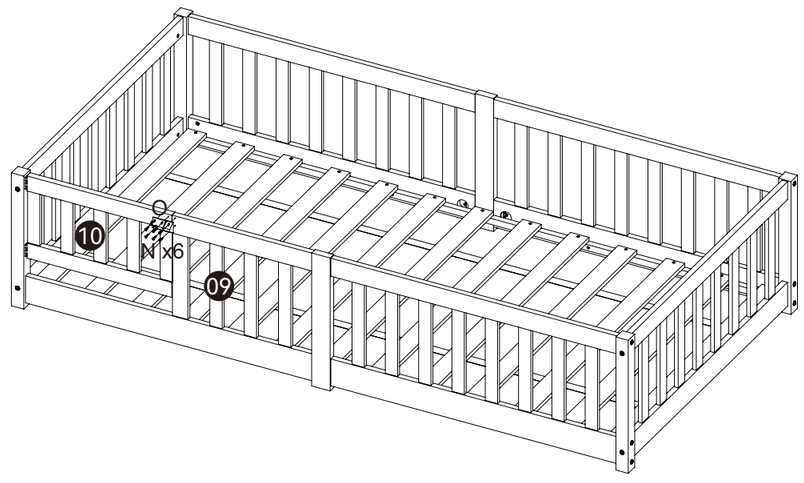

N
Φ3.5×16mm x6

O
x1

Attach slide bolt Part (O) to door Part (10) and front left guardrail Part (09) using self-tapping screw Part (N).

Email : **service@grandtunnel.com**

EN

EN

Step 12

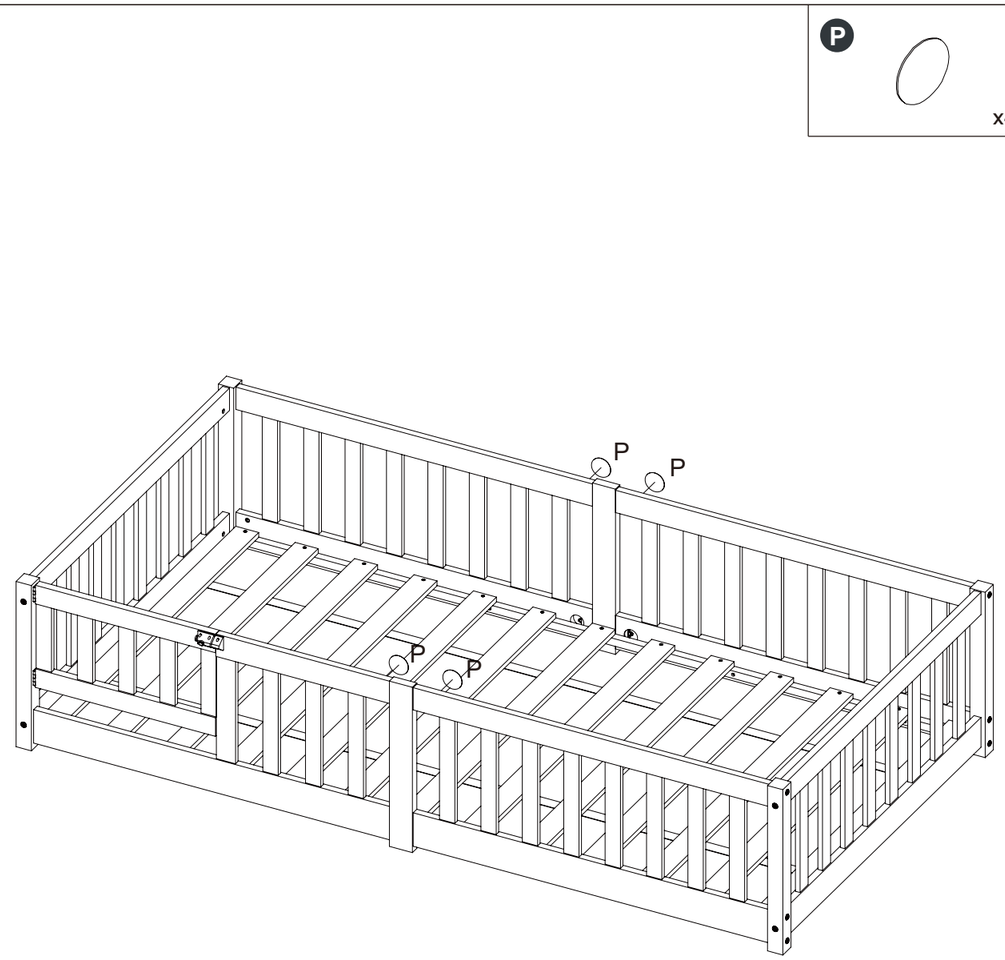

Apply hole cover sticker Part (P) over the large holes on rear guardrail Part (05/06) and front guardrail Part (08/09).

Email : **service@grandtunnel.com**