TP8639 36 95 Master Equipment Z-Lift II Electric Table 36In Ivory

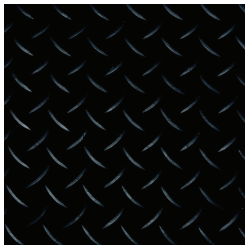

Tabletop

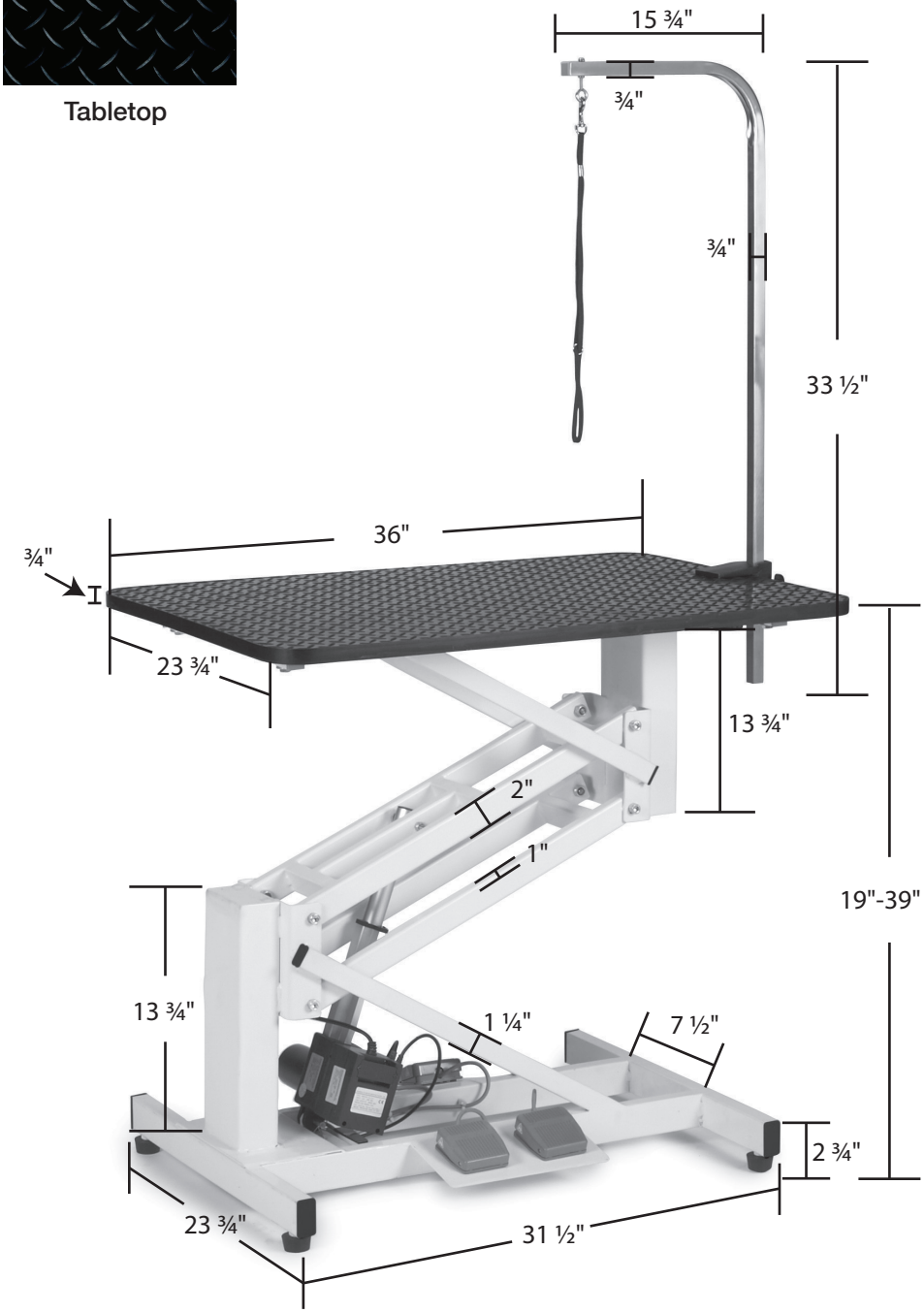

Accessories Included:
- Grooming Arm with Clamp
- 20" Grooming Loop Black
- Leg Levelers (4)

Materials & Color:
- Table Frame: 18 gauge, 1.2mm thick steel. Powder-coated ivory finish.
- Tabletop: ¾" MDF with black rubber matting.
- Grooming Arm: 19 gauge, 1.1mm thick type 304 stainless steel. Clamp is 18 gauge, 1.2mm thick iron with graphite powder-coated finish. Knobs are black polypropylene. Screws are galvanized iron.
- Foot Pedals: Gray Rubber.

Voltage & Power:
- Rated Power: 89Watts
- Input Voltage: 110Volts
- Output Voltage: 36Volts

Other Features:
- Weight Capacity: 220lbs
- Rate of Descent: 1.02 inches/second.
- Rising Rate: 0.91 inches/second.