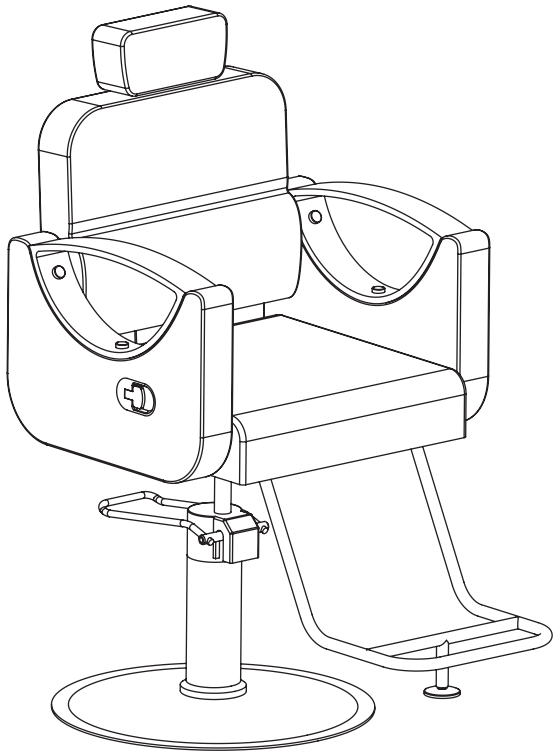

Salon Chair

Instruction Manual

COLOR:	Black	U3100231600
	Silver	U3100201500
	Golden	U3100261400

WARNING

- Do not stand in this chair or use the chair as a step ladder,use it as chair only.
- This chair is designed for one person to use at a time.
- Do not use this chair unless all bolts,screws and knobs are firmly secured.
- Check all bolts,screws and knobs every 90 days.Tighten if any are loose.
- Failure to follow these instructions may result in serious injury or death of yourself and people around you.
- Some of parts are heavy and/or has sharp edge, please install it carefully to avoid hurt you and people around you.
- Any packing bags of this product are not a toy. To avoid danger of suffocation, keep away from babies and children, do not use in cribs, beds.

Please contact us via email： info@artisthandbeauty.com regarding any damaged or missing items.
We will provide technical support within 24 hours.

Rapid Q&A by Artist Hand

Q.No.1:
A.:

Pump doesn't work or reverse work

The pump lever may installed in the wrong direction shown as below

Incorrect directions

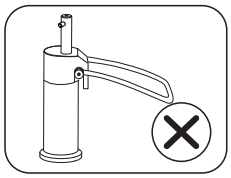

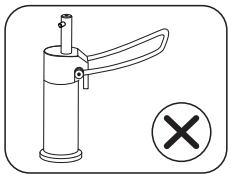

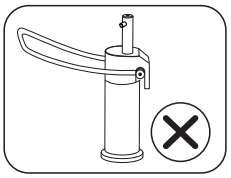

Correct direction

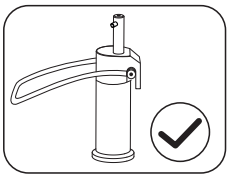

Q.No.2:
A.:

Chair looks crooked

The pump tray may installed in the wrong direction

Correct direction

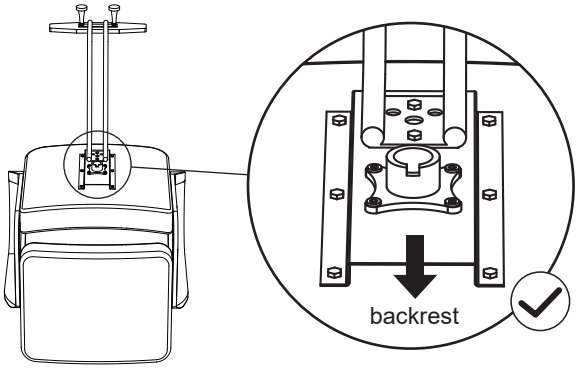

The notch on the tray faces the backrest

Q.No.3:
A.:

Pump makes thumping sound

Please Scan the QR code to watch the solution video

Q.No.4:
A.:

Chair difficult to swivel

Please refer to the diagram on the right or Scan the QR code to watch the solution video

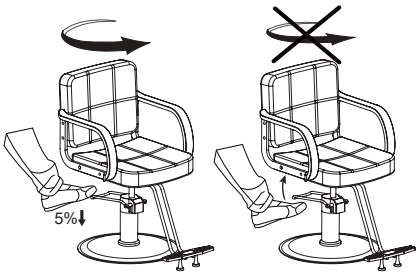

Q.No.5:
A.:

Chair operation video example

Please see 1.1 operation guide or Scan the QR code to watch the video

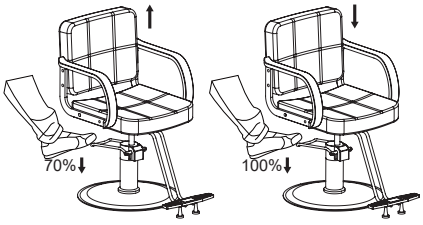

Q.No.6:
A.:

Chair installation video example

Please Scan the QR code to watch the video

❶ Tools required

A Phillip head screwdriver&M4 &M6 Allen key or Power tools is required for the assembly of this product.(not included)

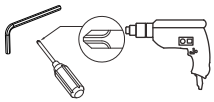

❷ 1 person is needed



❸ Take 30 minutes



1.1 Feature and Specification

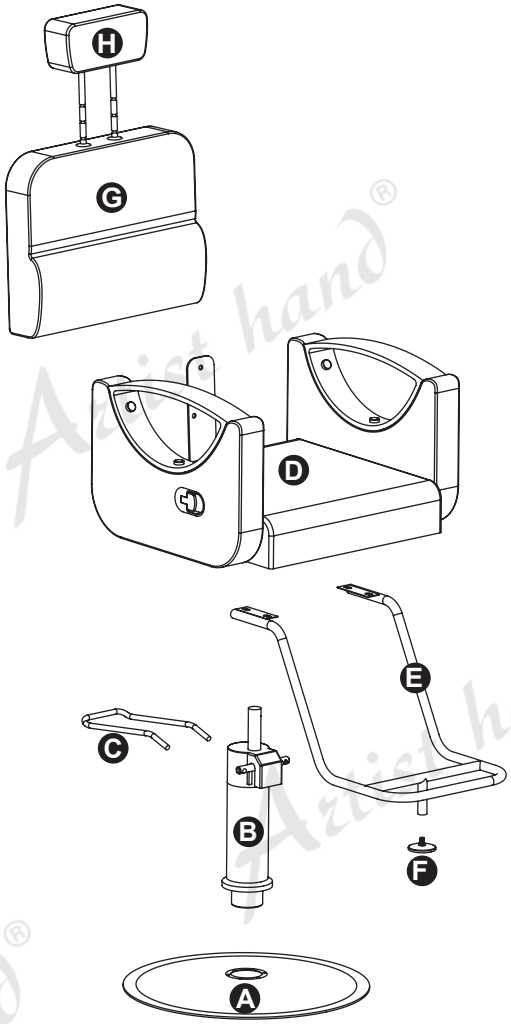

Main Parts

Parts Code	Image	Parts Name	Qty(Pcs)
A		Base	1
B	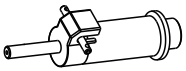	Pump	1
C	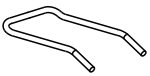	Pump Lever	1
D	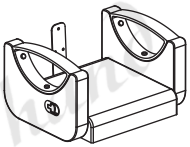	Seat	1
E	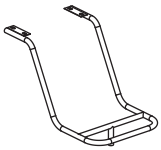	Footrest	1
F		Standnail	1
G		Backrest	1
H	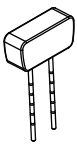	Headrest	1

Preinstalled Accessories

Parts Code	Where to find	Parts Name	Qty(Pcs)
a	Preinstalled on B	M8*10 Inner screw	2
b	Preinstalled on D	M8*25 Bolt	4
d		M8 Washer	4

Accessory Kit(*Packed In a Small Bag*)

Parts Code	Image	Parts Name	Qty(Pcs)
①		M8*40 Bolt	6
②		M8*30 Bolt	3
③		Tools	2

1.2 Installation Diagram

Step 1

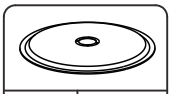

A | 1PC



B | 1PC

①*6

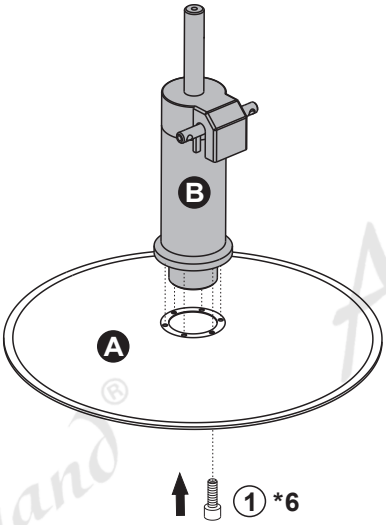

Step 2

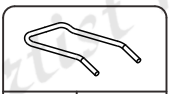

C | 1PC

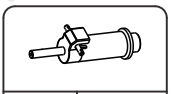

B | 1PC

a*2 preinstalled on B

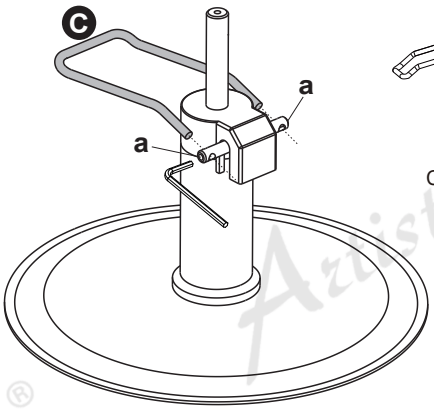

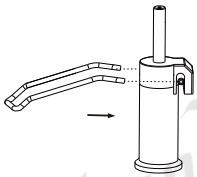

Correct installation direction

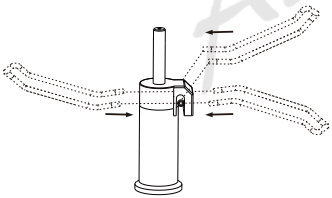

Incorrect installation directions

Step 3

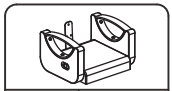

D | 1PC

b*4& d*4 preinstalled on D

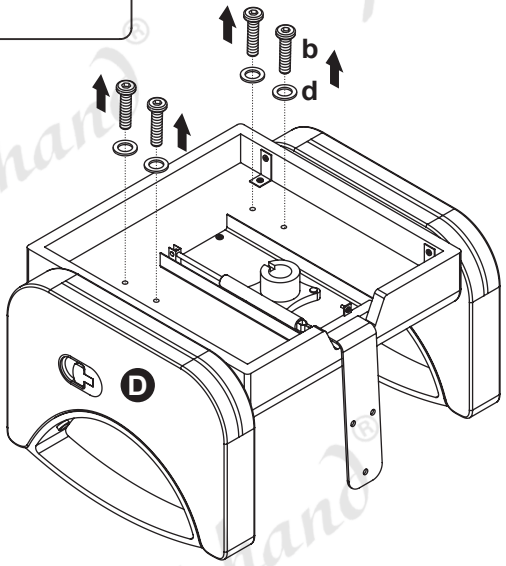

Step 4

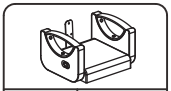

D | 1PC

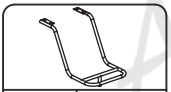

E | 1PC

b*4 d*4

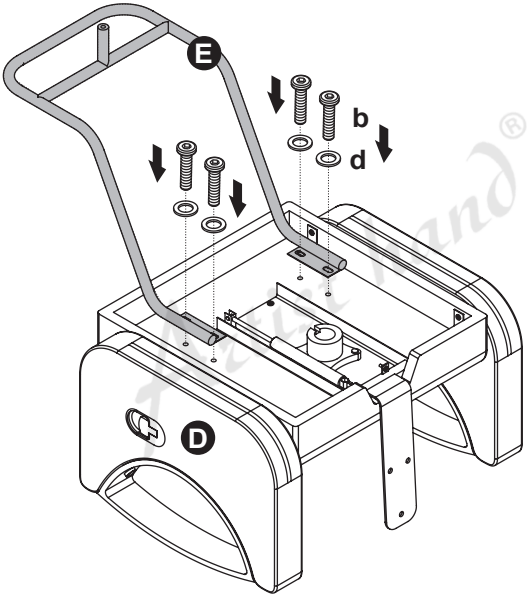

Step 5

F	1PC

E	1PC

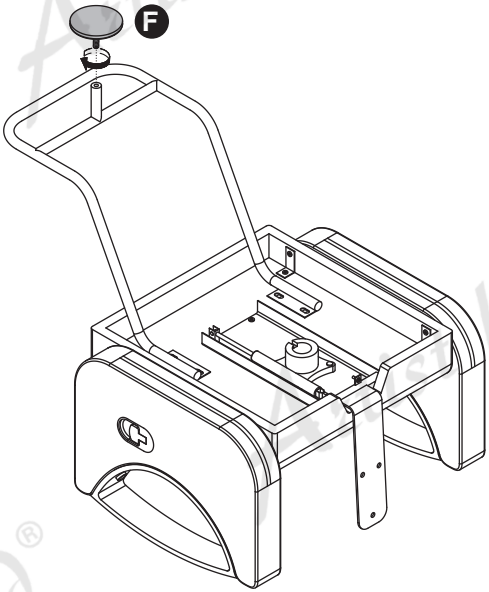

Step 6

D	1PC

B	1PC

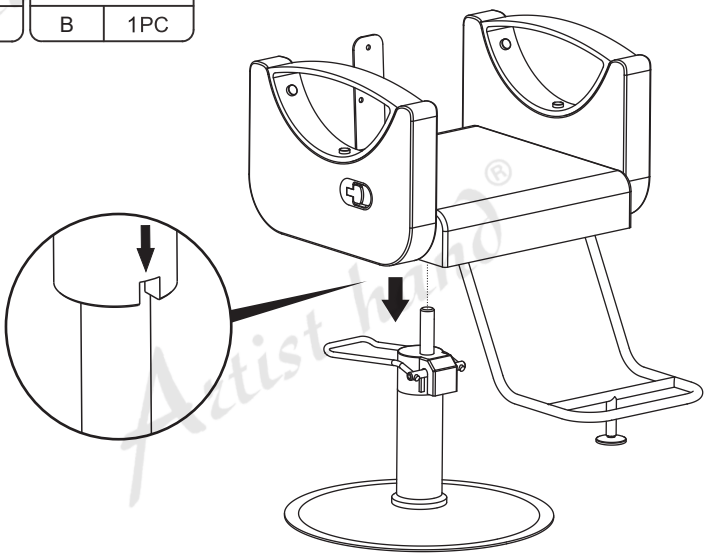

Step 7

G	1PC

②x3

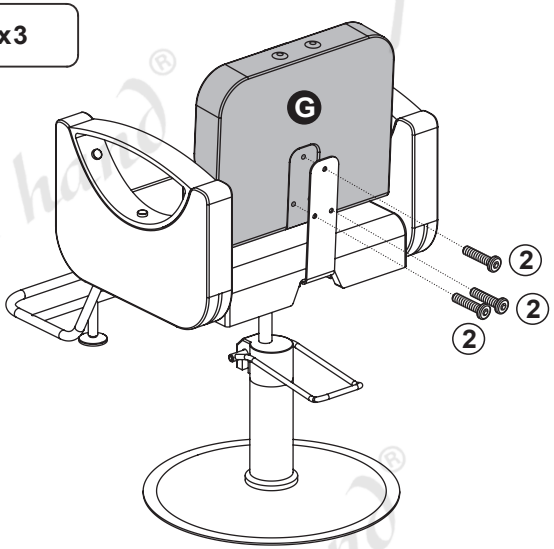

Step 8

G	1PC

H	1PC

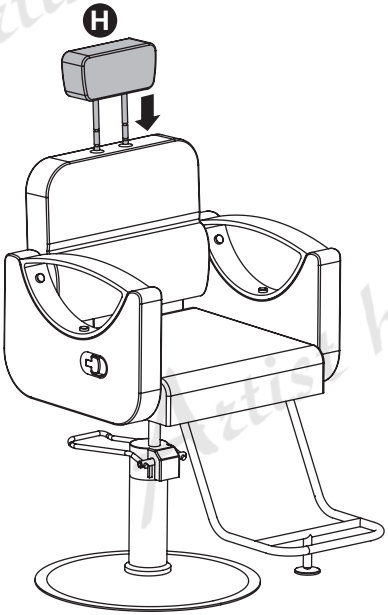

1.3 Operation Guide

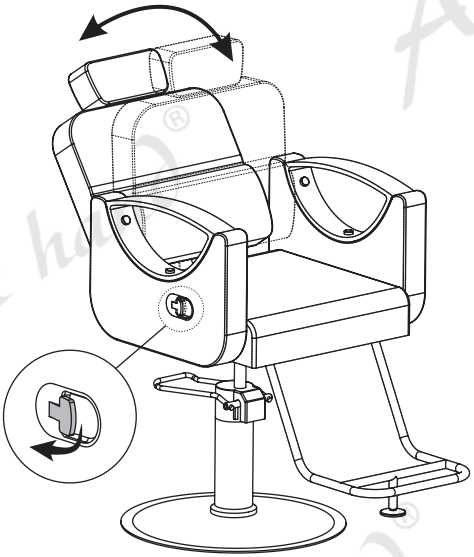

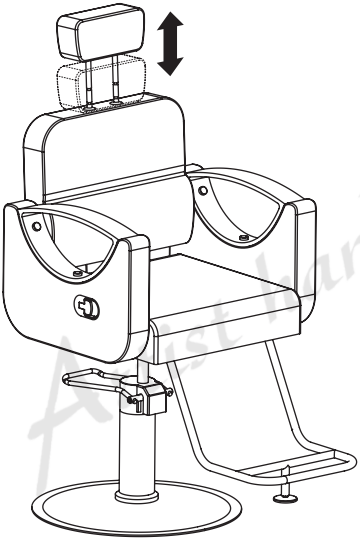

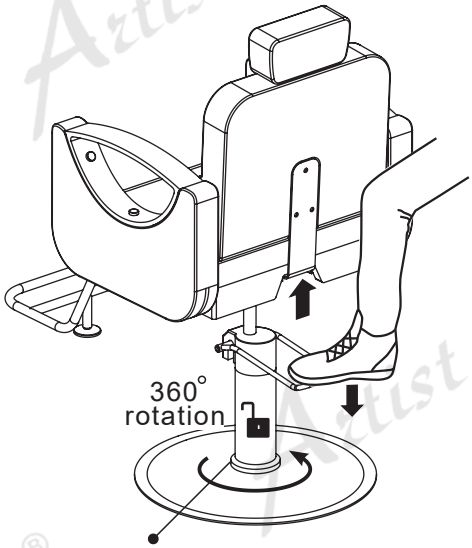

unlocking the rotation

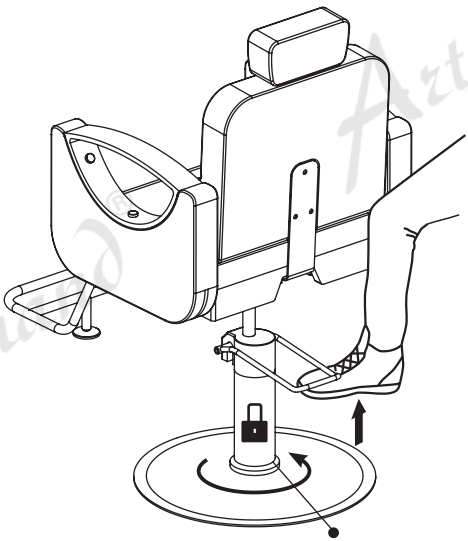

locking the rotation

Continuously press down the pump lever halfway, chair will going up.

Stamp the pump lever and keep on hold, chair will going down.

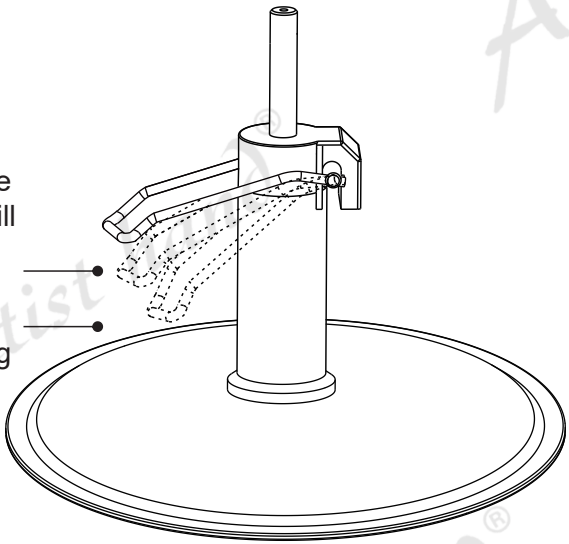

1.4 Trouble and Solution

No.	Trouble	Solution
1	Pump not working	Pump lever direction installed incorrectly: Please reinstall the pump lever, see step 3 of 1.2 Installation Diagram on page 3 of instruction manual.
2	Abnormal sound of pump	Since it is a new product, there is some gas in the pump. please raise and lower the chair several times to exhaust air.
3	Some grease on the pump shaft	It's a normal phenomenon.
4	Rotating difficultly	1) Rotating function locked: Please unlock the rotating function, see picture 1 of Operation Guide 1.3 on page 6 of instruction manual. Please press down the pump lever and turn the chair at the same time, the problem will be solved. 2) Since the pump has the brake function to make the chair stop rotation. so once lift up the pump lever and hold, the chair rotation function is locked. sometimes the brake maybe so tight cause the chair rotation difficultly. please lift up the pump lever to the highest position, and then press it down, after doing it several times, the rotation function will be more easier.
5	Chair wobble	The screws(parts b, c) under the pump getting loose: Please tighten these screws.
6	Other issues	If you have any other problems, please Email to **info@artisthandbeauty.com** Our professional team will provided the technical support by pictures or videos.

1.5 Maintenance

No.	Maintenance Parts	Maintenance Method
1	Leather surface care	1.Avoid using hard objects to scratch the leather surface.Leather fabrics are generally more durable, but can be easily scratched by sharp objects. 2.Leather surfaces require regular monthly maintenance. Please use leather hardener for maintenance. If the surface is stained with dye, perm, or other difficult-to-clean items, try wiping with a cotton cloth dipped in a little gasoline or seek professional help.
2	Pump care	The weight capacity we advertised is static capacity, please do not use it for a long time with maximum load .
3	Base care	The base surface is electroplated to prevent rust and corrosion. Do not use sandpaper or liquids to clean, please use a dry cotton cloth once a month.

1.6 Customer Service

Any question or suggestion please feel free to contact our Customer Service Team

E-mail:info@artisthandbeauty.com

ABOUT Towning

TOWNING (A Sub-Brand of ARTIST HAND)
Born from ARTIST HAND's core vision to empower beauty and wellness professionals worldwide, TOWNING emerged as a dedicated sub-brand crafted for those who cherish timeless reliability and professional authenticity. Rooted in ARTIST HAND's legacy of delivering exceptional quality and one-stop solutions for salons, barbershops, and therapy studios, TOWNING was envisioned to fill a vital niche: equipment that blends classic craftsmanship with uncompromising durability—designed to be the backbone of busy, high-performance spaces.

For decades, ARTIST HAND has listened to professionals who sought tools that stand the test of time—equipment that doesn't just meet industry standards, but becomes a trusted companion through years of styling, grooming, and healing. TOWNING answers that call, inheriting ARTIST HAND's rigorous quality control and customer-centric approach while focusing on refined, no-nonsense designs that prioritize functionality and longevity. Every TOWNING product—from its gonomic barber chairs to its sturdy treatment tables—carries the DNA of ARTIST HAND's : a commitment to elevating the work of technicians by providing tools that feel intuitive, reliable, and built for purpose.

As a proud sub-brand of ARTIST HAND, TOWNING stays true to the parent brand 's mission to help entrepreneurs build thriving businesses, while carving its own identity as the go-to choice for professionals who value heritage, consistency, and practicality. Whether you're launching a neighborhood barbershop or expanding a well-established spa, TOWNING delivers the foundational equipment you need—backed by ARTIST HAND's global network, exceptional service, and unwavering dedication to professional excellence. With TOWNING, you're not just investing in a product; you're embracing the legacy of ARTIST HAND, tailored to the demands of everyday professional success.

▪ ***Customer service Mailbox :*** info@artisthandbeauty.com