ASSEMBLY INSTRUCTIONS

(CHAIR)

NOTE:THIS ITEM NOT RECOMMENDED FOR COMMERCIAL USE
KEEP THIS DOCUMENT FOR REFERENCE IN CASE PARTS ARE NEEDED

DO NOT TIGHTEN SCREWS UNTIL COMPLETELY ASSEMBLED!!

	PARTS LIST		QTY'
A	Chair Back	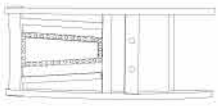	1pc
B	Seat		1pc
C	Front Leg		2pcs
D	SIDE STRETCHER (LEFT)		1pc
E	SIDE STRETCHER (RIGHT)		1pc
F	FRONT STRETCHER		1pc

	HARDWARE LIST		QTY'
1	Bolt Ø1/4" x 20 x 2-3/8"		4pcs
2	Spring Washer Ø5/16" x 1/2"x 1/16"		10pcs
3	Flat Washer Ø5/16" x 3/4"x1/16"		10pcs
4	Bolt Ø1/4" x 20 x 1-1/2"		2pcs
5	Bolt Ø1/4" x 20 x 3-1/8"		4pcs
6	Allen Key 5/32"		1pc
7	Serew Ø 4 x 1-5/8"		6pc

STEP 1

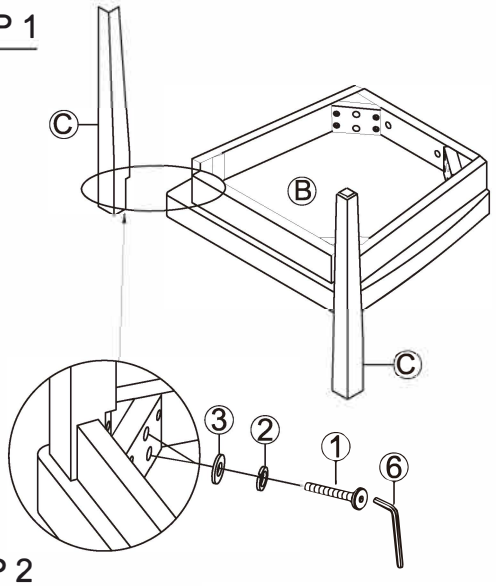

ASSEMBLY COMPLETED

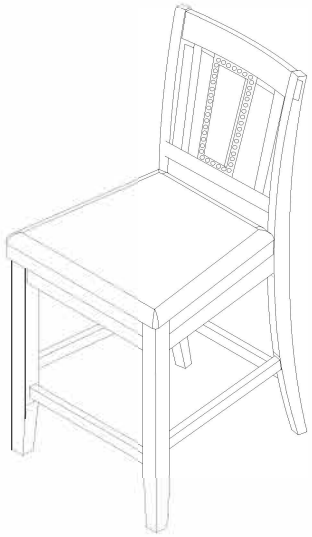

STEP 2

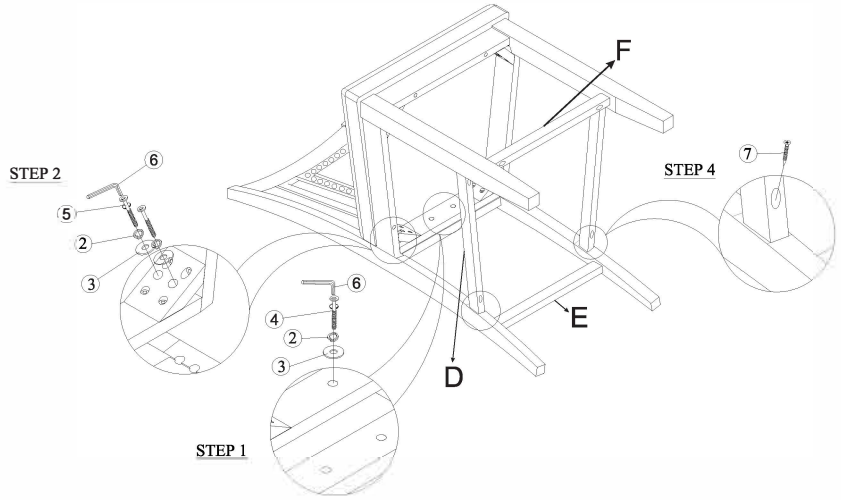

ASSEMBLY INSTRUCTIONS

(TABLE)

NOTE:THIS ITEM NOT RECOMMENDED FOR COMMERCIAL USE
KEEP THIS DOCUMENT FOR REFERENCE IN CASE PARTS ARE NEEDED

DO NOT TIGHTEN SCREWS UNTIL COMPLETELY ASSEMBLED!!

	HARDWARE LIST		QTY'
1	Bolt Ø5/16" x 20 x 2-3/8"		8pcs
2	Spring Washer Ø5/16"x 1/2"x 1/16"		8pcs
3	Flat Washer Ø5/16"x 3/4"x 1/16"		8pcs
4	Allen Key 5/32"		1pc

	PART LIST		QTY'
A	TABLE TOP	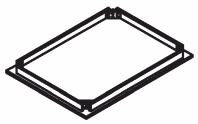	1 PC
B	TABLE LEG	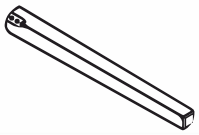	4 PCS

ASSEMBLY COMPLETED



STEP 1

