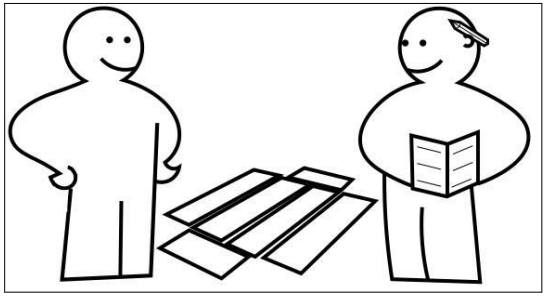

Attention:
Two people are required for assembly and lifting unit.

ASSEMBLY INSTRUCTION

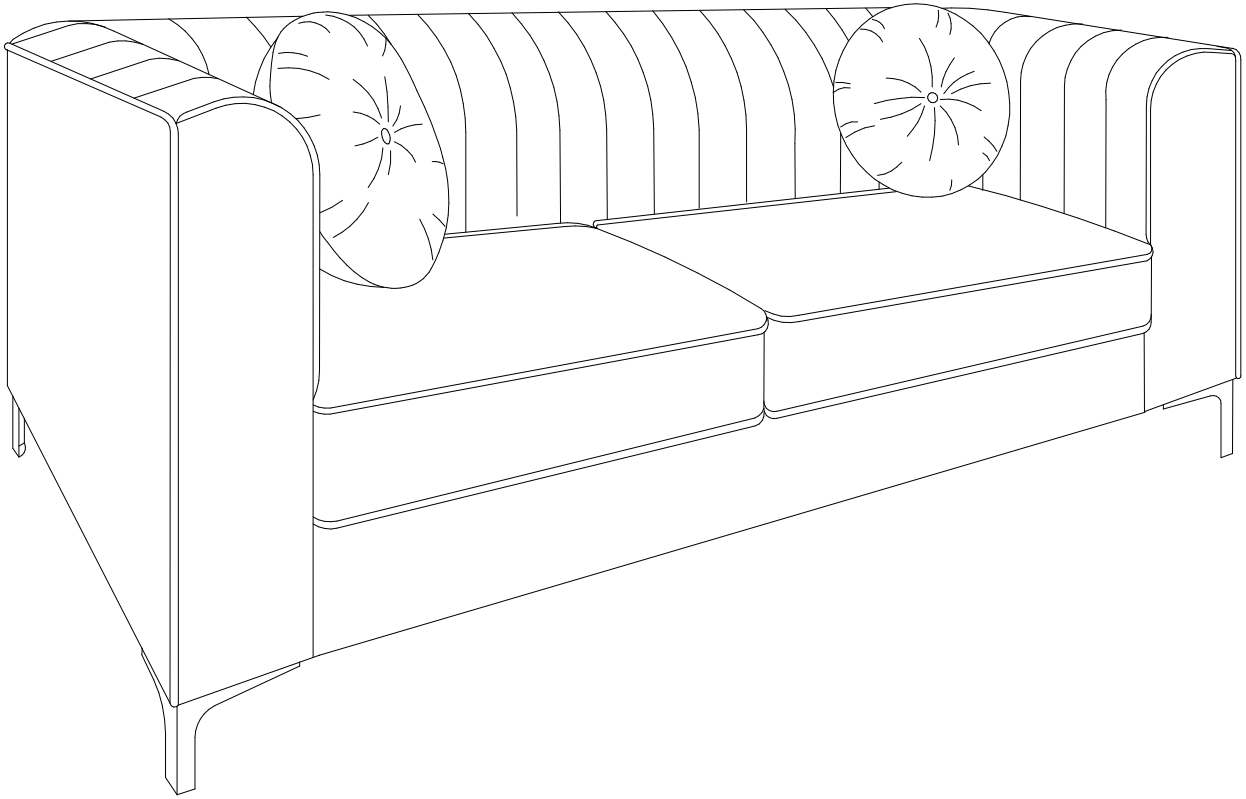

ASSEMBLY PART

1.

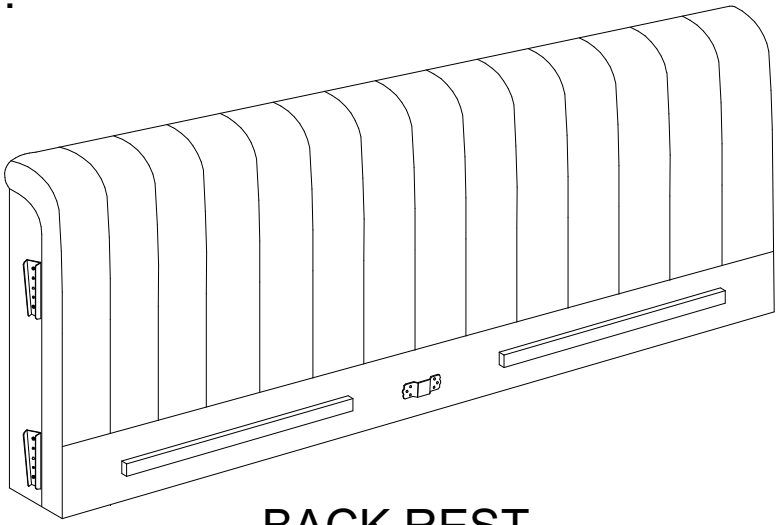

BACK REST

2.

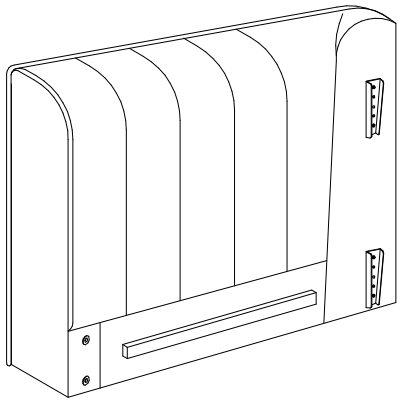

LEFT ARM (L)

3.

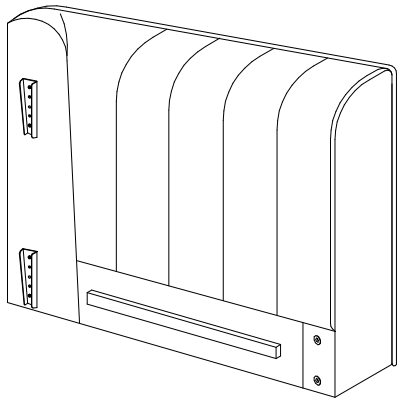

RIGHT ARM (R)

4.

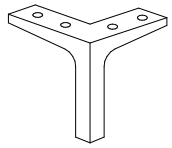

LEG (4PCS)

5.

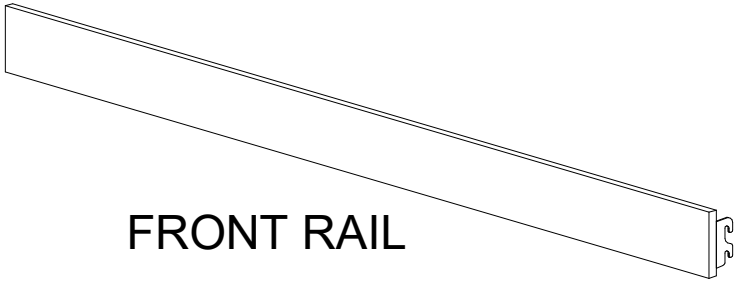

FRONT RAIL

6.

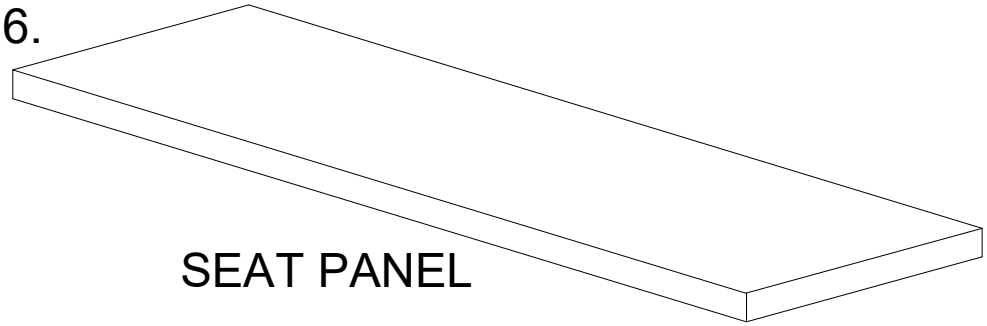

SEAT PANEL

7.

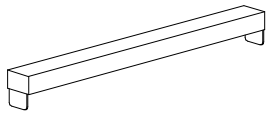

SEAT PANEL SUPPORT

8.

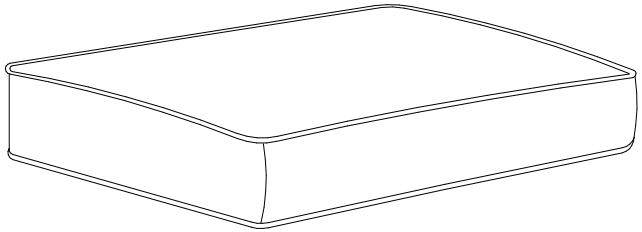

SEAT CUSHION (2PCS)

9.

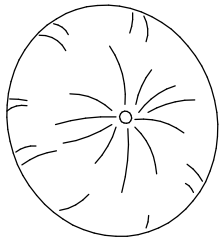

PILLOW (2PCS)

NO	HARDWARE DESCRIPTION	QTY
A.	Allen Key	1PC
B.	20mm Bolt 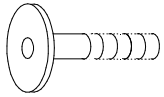	8PCS
C.	Flat Washer 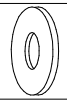	8PCS

ASSEMBLY INSTRUCTION

STEP 1.

Hook on the Back Rest (1) into Left Arm (2) and Right (3) securely.

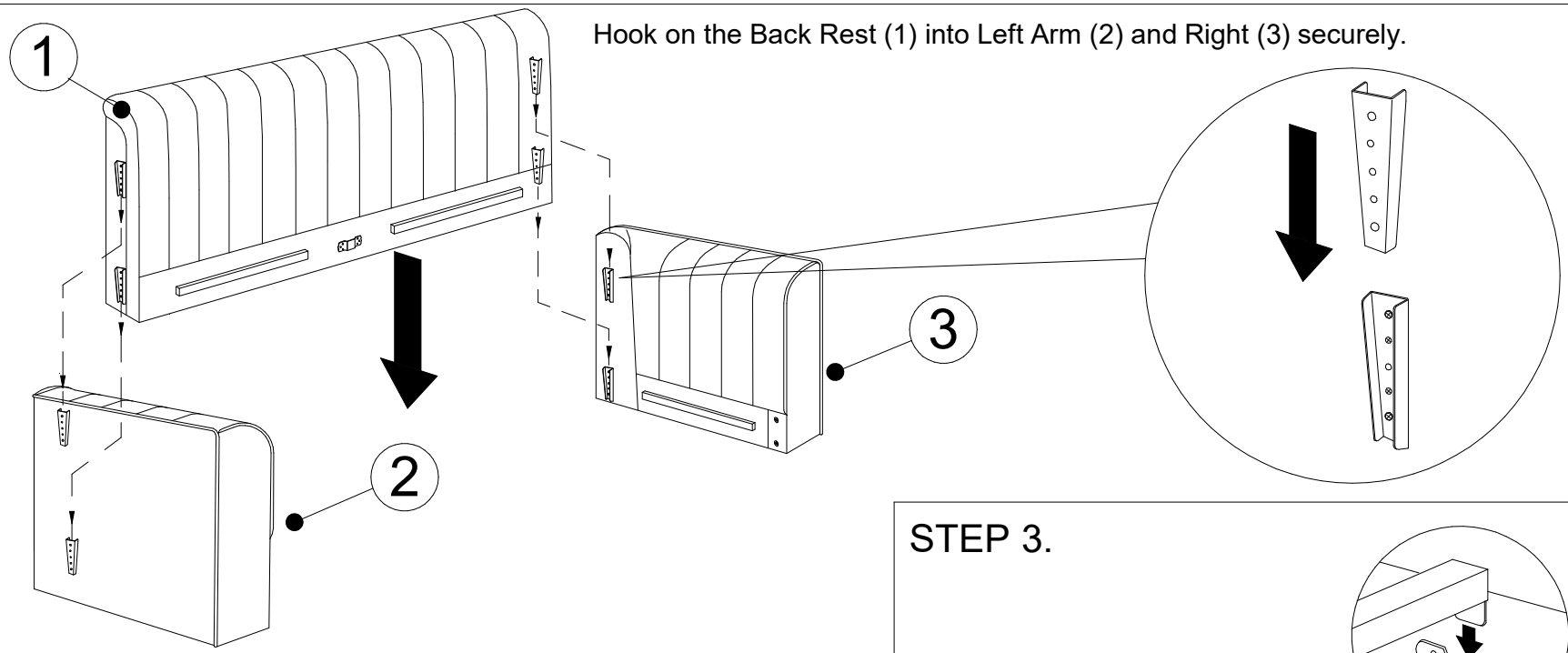

STEP 2.

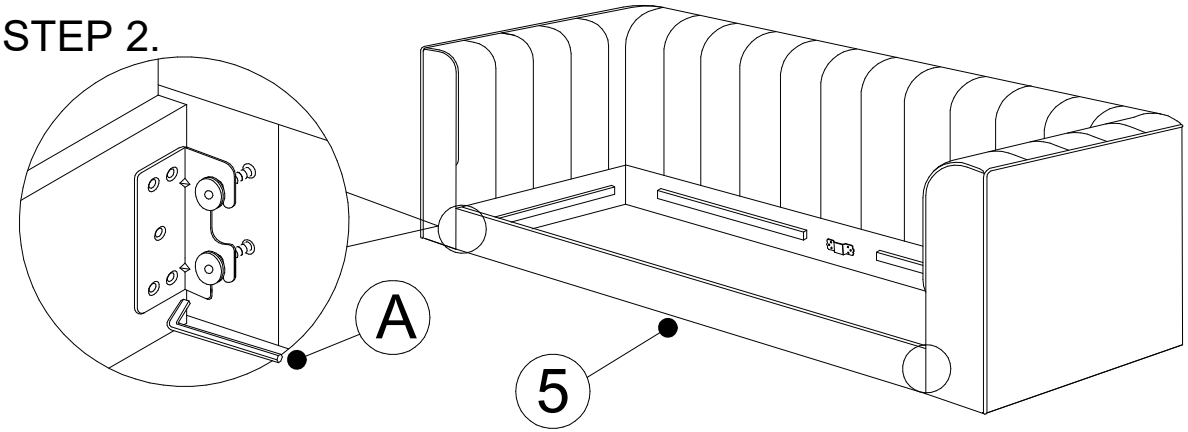

Slightly lossen the four bolts using Allen Key (A) without removing the bolts completely from both Side Arms (2 and 3). Hook on Front Rail (5) hooks into loosen bolts, once placed tighten and secure all four bolts with Allen Key (A).

STEP 3.

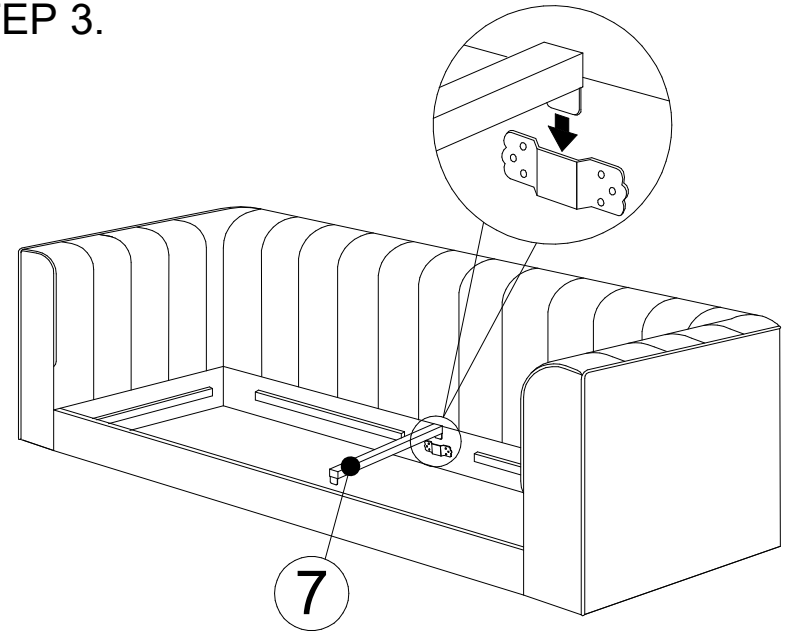

Hook on and secure SEAT PANEL SUPPORT (7) to the two metal slots on both Front Rail (5) and Back Rest (1).

ASSEMBLY INSTRUCTION

STEP 4.

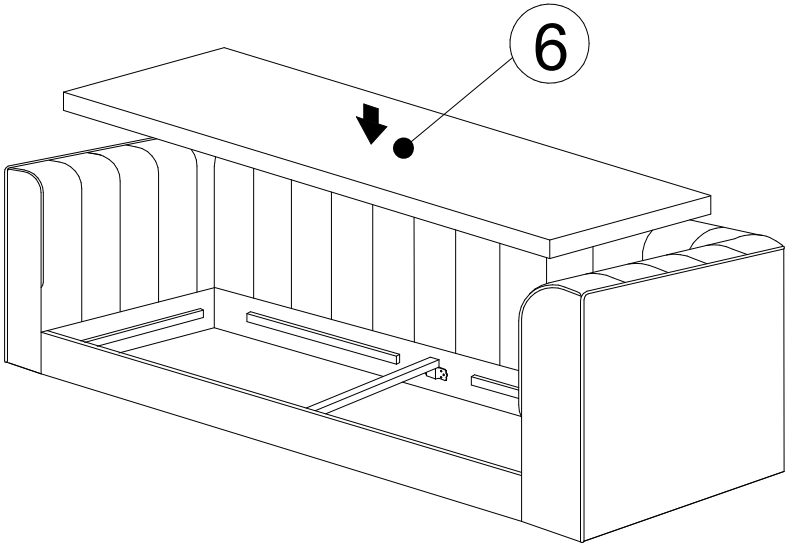

Lay the SEAT PANEL (6) on top of units frame.

STEP 5.

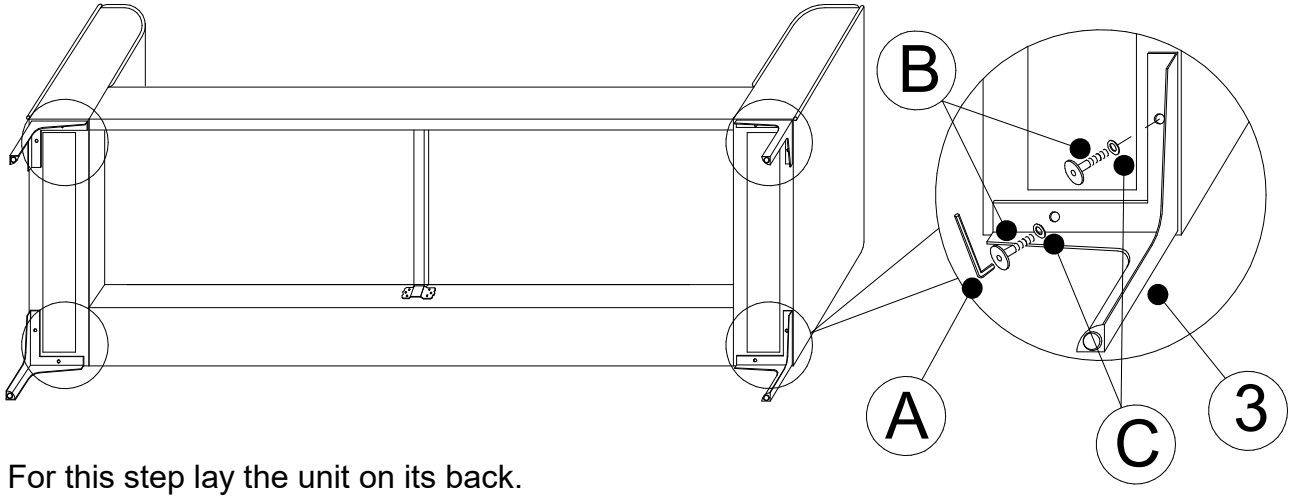

For this step lay the unit on its back.
Attach LEGS (4) to the four corners of the unit. Legs are to be attached using Bolt (B), Washer (C) using Allen Key (A). Make sure the bolts are fully tightened and secure.

STEP 6.

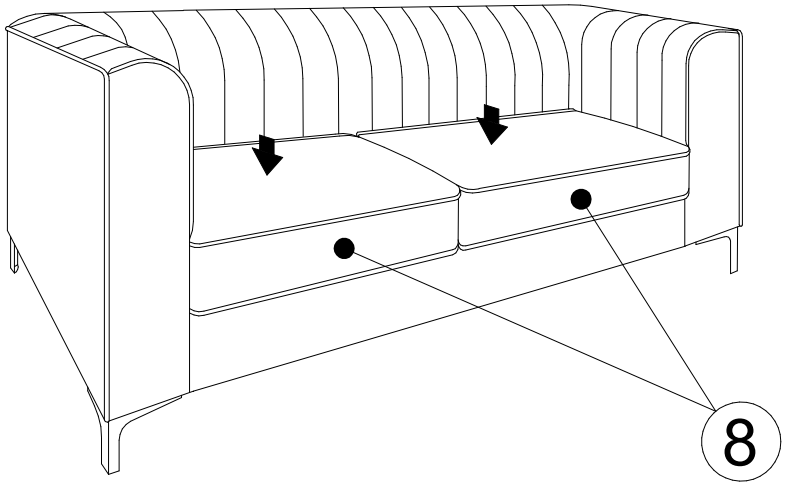

Attach the Seat Cushion (8) (2pcs).

STEP 7.

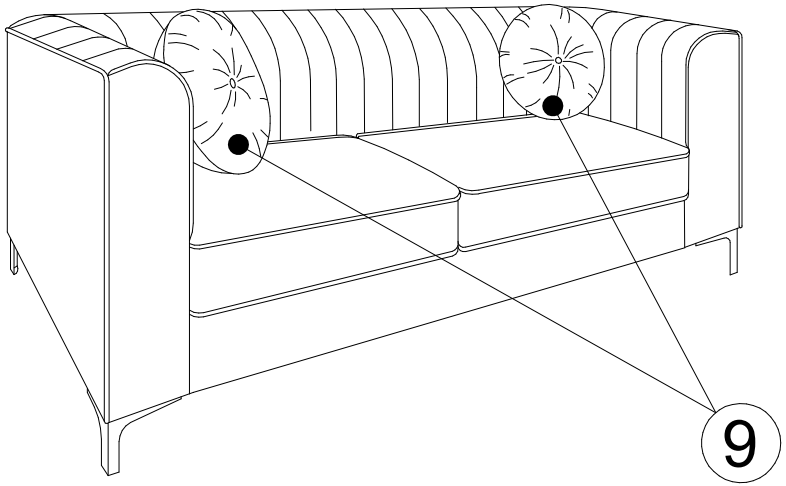

Lay Pillows (9) (2pcs).