DJ0288BK-100CM



Installation Video OR

DJ0288-100CM
https://vimeo.com/1100500533

version : 1.0

After-Sales Service Card

Dear Customer,

Thank you for choosing our products! We are committed to providing high-quality furniture and exceptional service.

If you encounter any issues, including but not limited to:
✓ Shipping damage
✓ Quality issues
✓ Installation difficulties
✓ Missing accessories

Please feel free to contact us, and we will resolve your issue as soon as possible!

Contact Us:
Email: HOLCEPZN@outlook.com

To help us assist you more efficiently, please provide your platform order number (e.g., 123-1234567-1234567)when reaching out.

Your satisfaction is our top priority! Thank you for your support!

— **The Customer Service Team**

ASSEMBLY INSTRUCTIONS

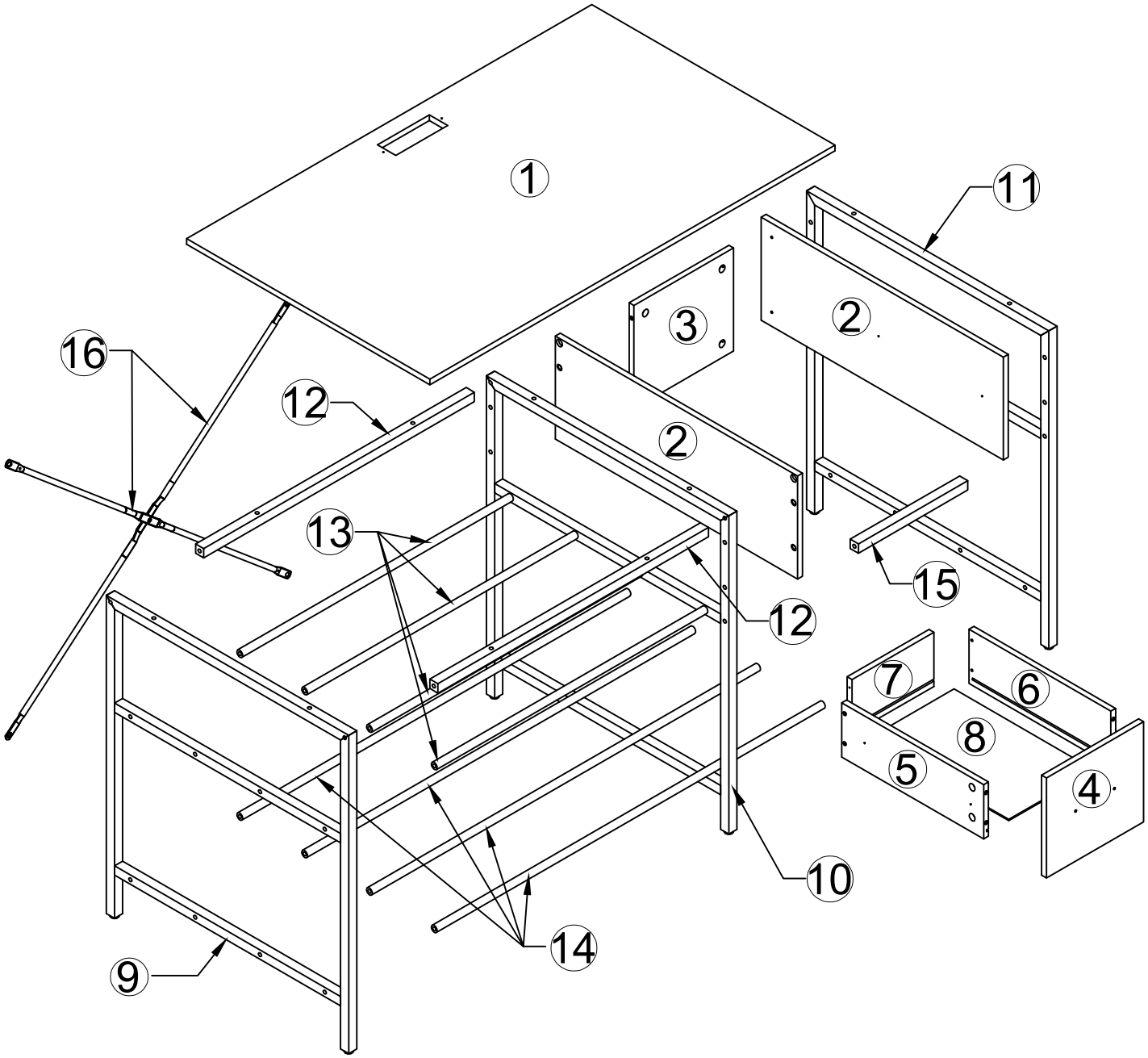

ASSEMBLY INSTRUCTIONS

A x8	B x8	C x5	D x18	E x22
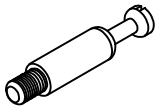	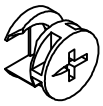	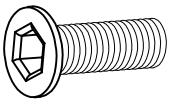	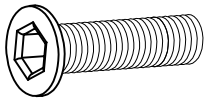	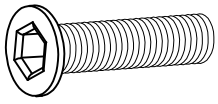
ϕ6x35mm	ϕ15x10mm	M6x15mm	M6x28mm	M6x35mm
spare:1	spare:1	spare:1	spare:1	spare:2

F x4	G	I x10	J x1	K x1
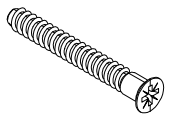	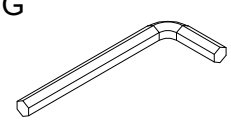	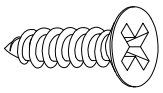	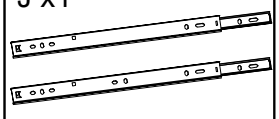	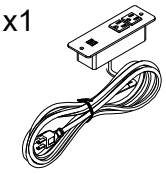
Ø5x38mm	4mm	Ø6x3x12mm	L=340mm	
		spare:1		

L x1	M x1	N x2		O x6
	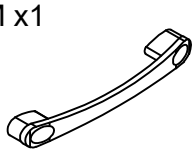	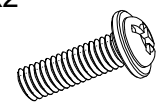	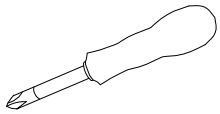	
M6mm		M4x16mm		

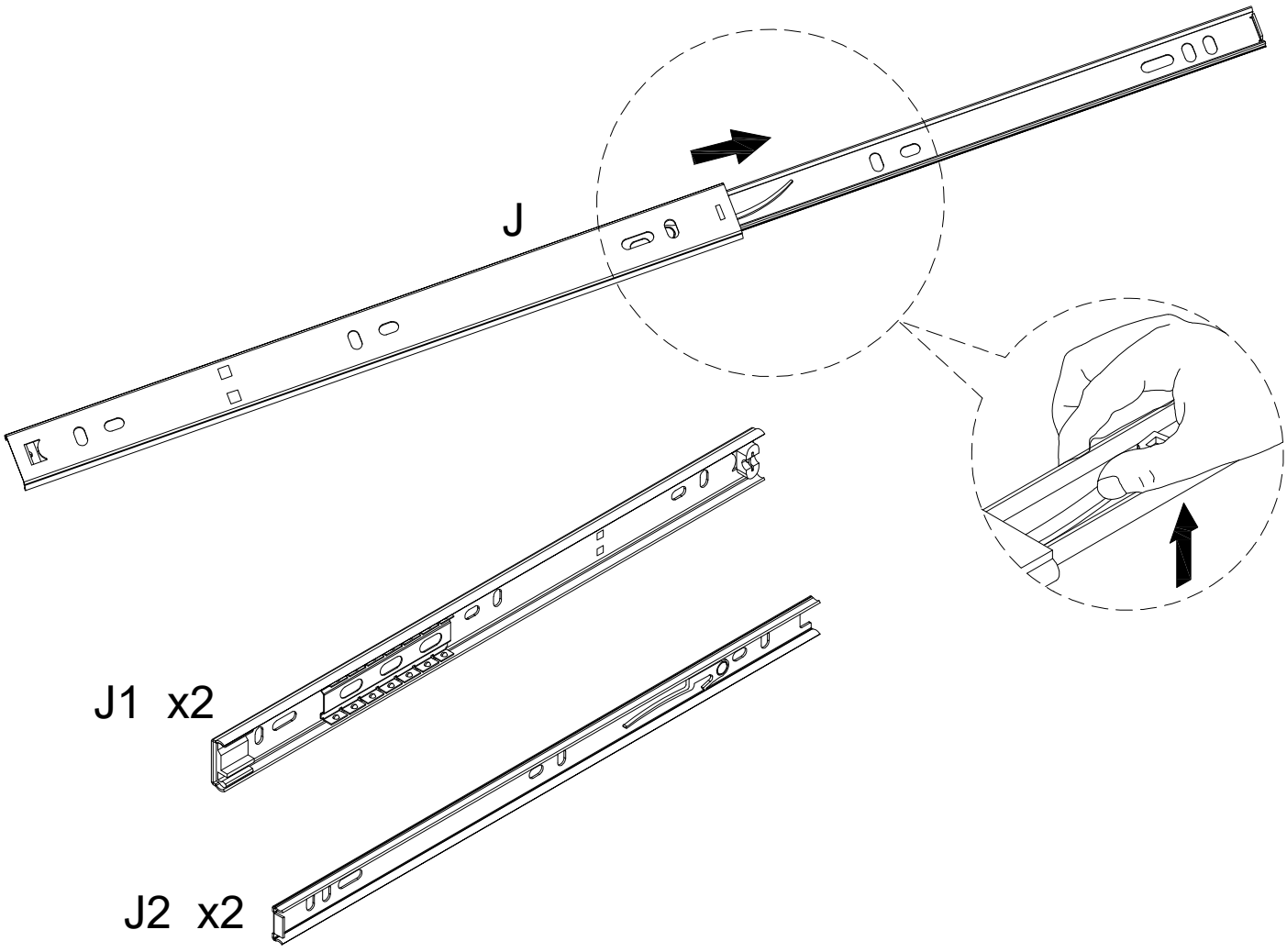

ASSEMBLY INSTRUCTIONS

1 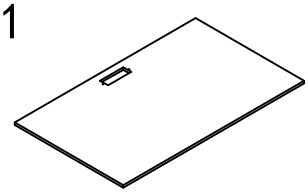 X1	2 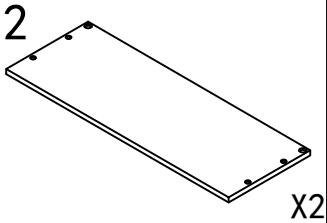 X2	3 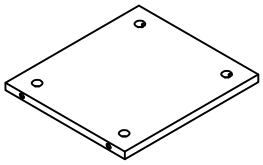 X1	4 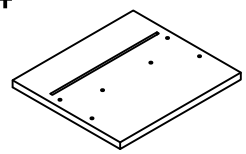 X1
5 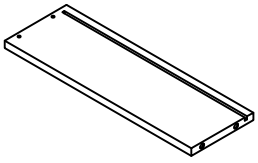 X1	6 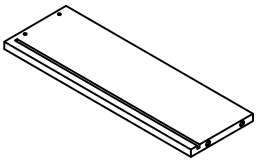 X1	7 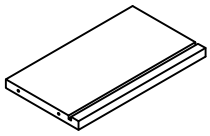 X1	8 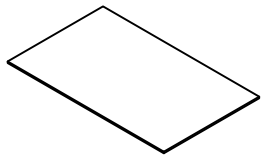 X1
9 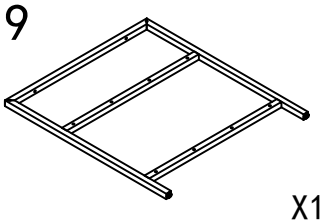 X1	10 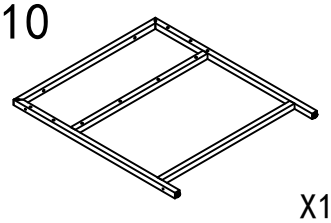 X1	11 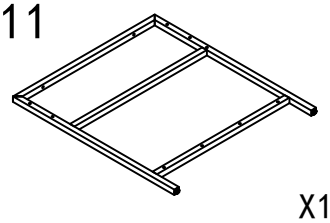 X1	12 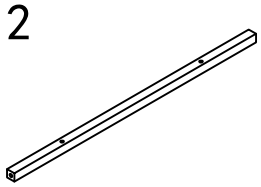 X2
13 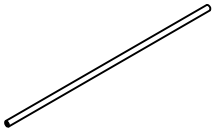 X4	14 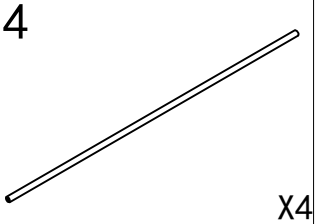 X4	15 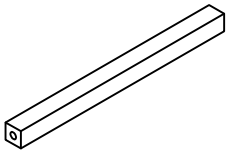 X1	16 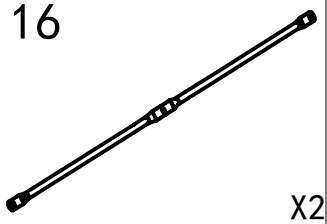 X2

INSTALLATION

STEP 1

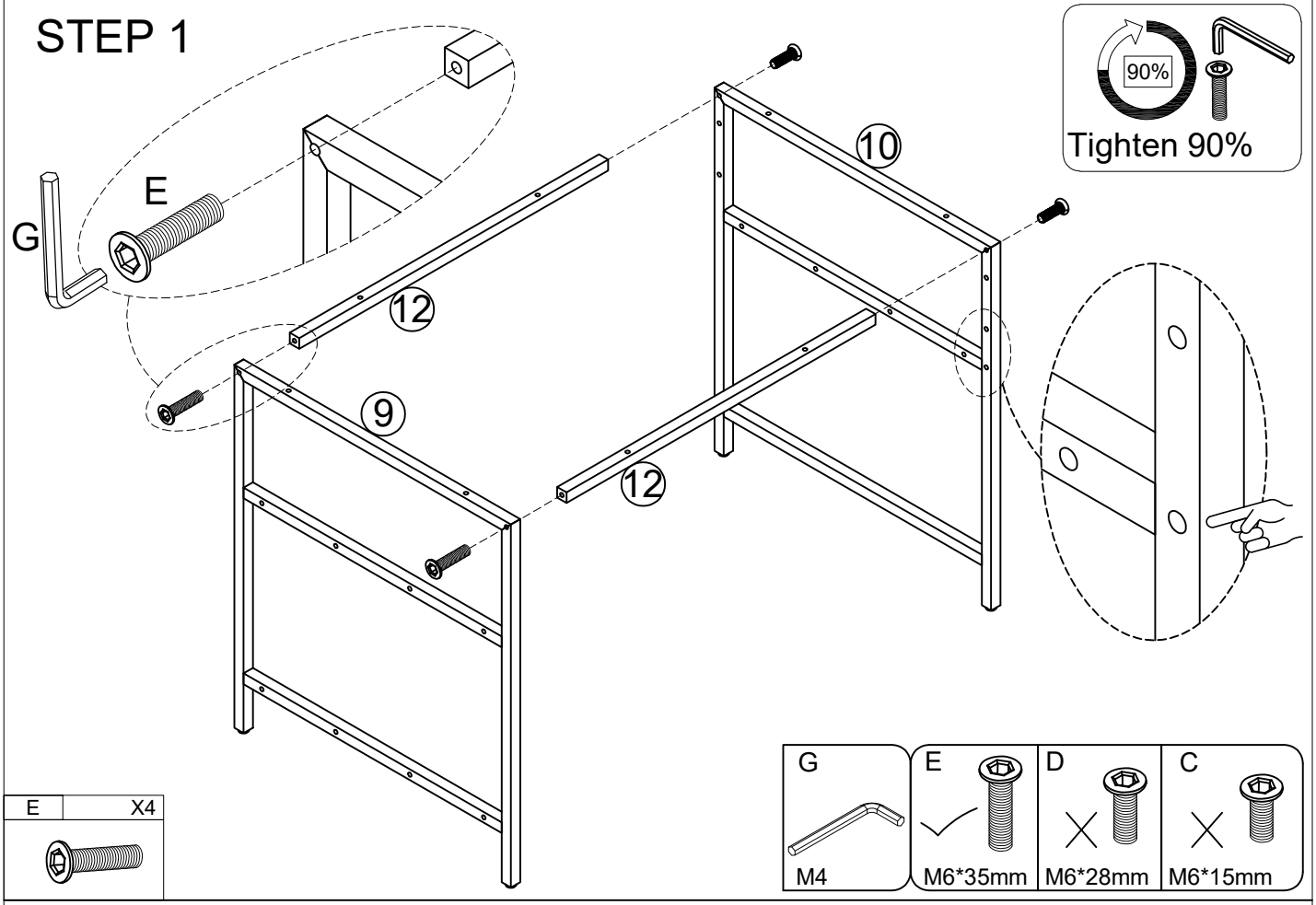

E	X4

G	E	D	C
M4	M6*35mm	M6*28mm	M6*15mm

STEP 2

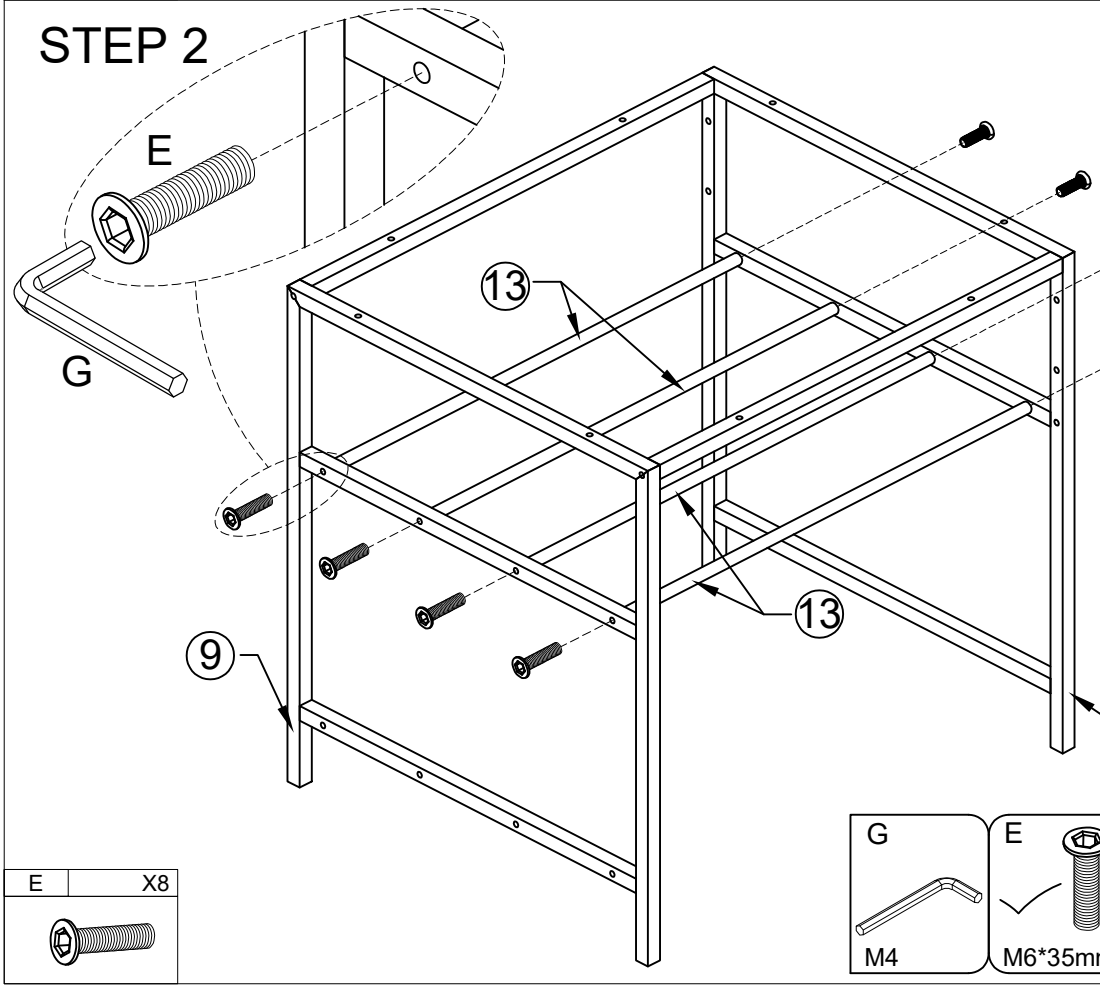

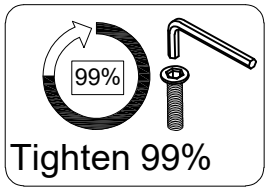

During the installation process, it is necessary to check and tighten the screws at the front part, and then turn them to 99% of the maximum tightening force.

E	X8

G	E	D	C
M4	M6*35mm	M6*28mm	M6*15mm

INSTALLATION

STEP 3

Do not use power tools for installation in this step.

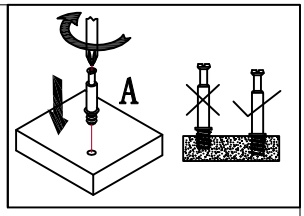

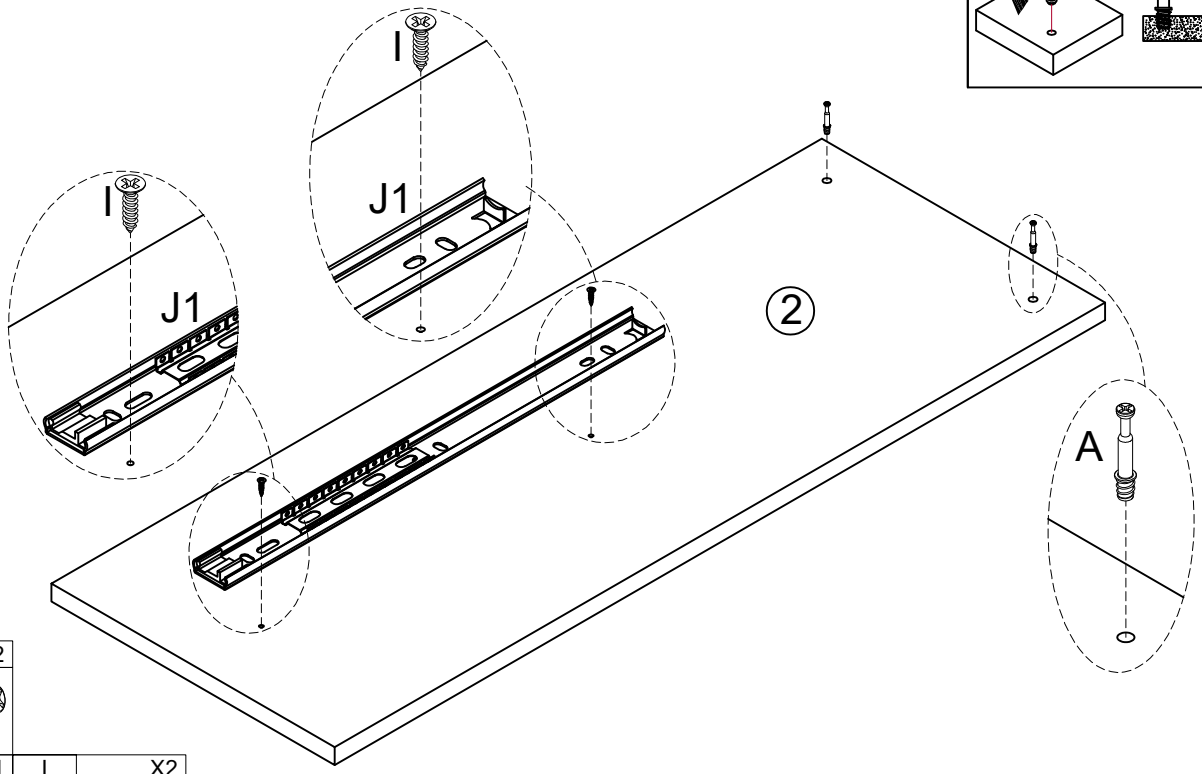

A	X2

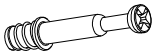

J1	X1



I	X2

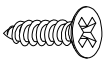

STEP 4

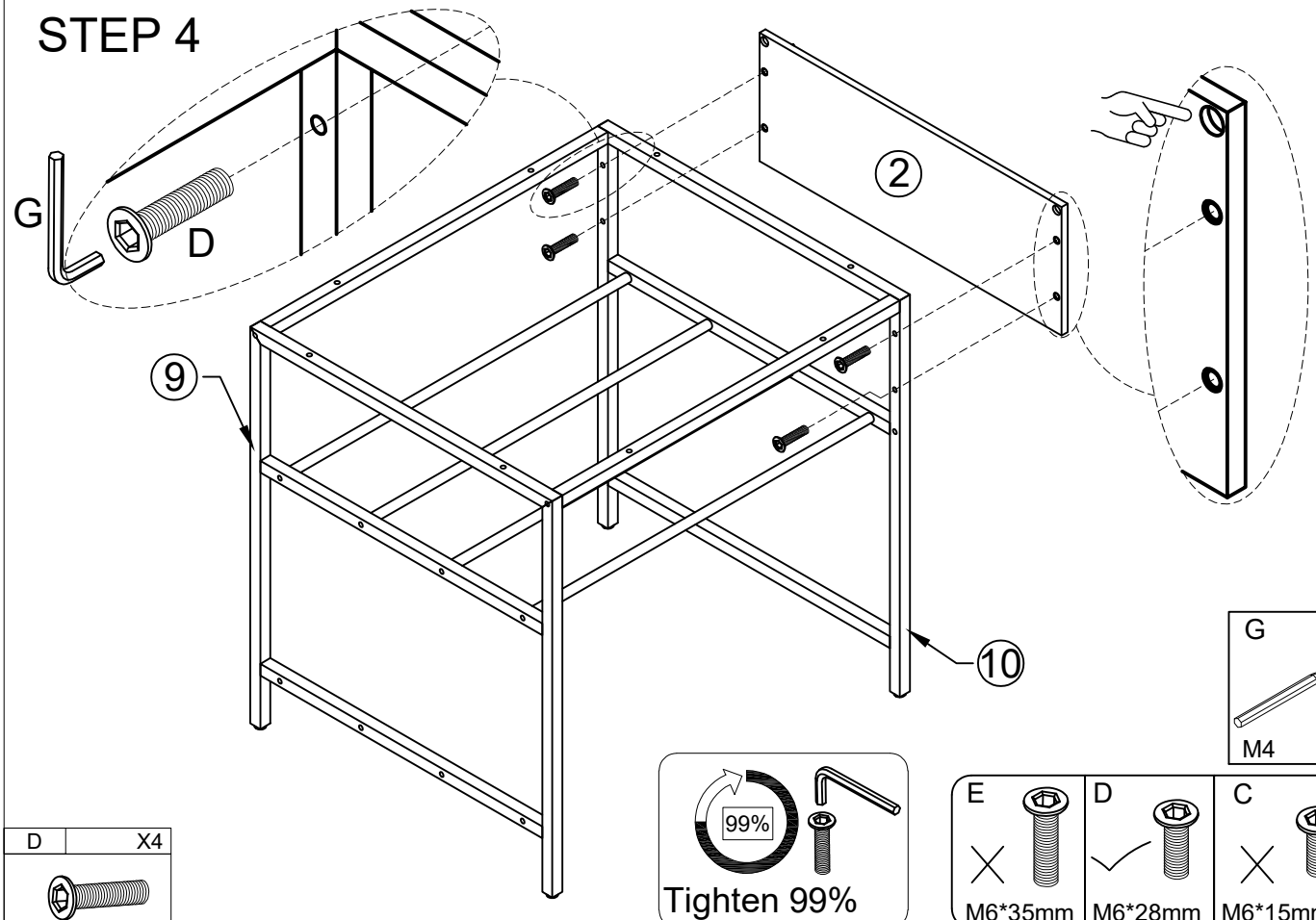

D	X4

INSTALLATION

STEP 5

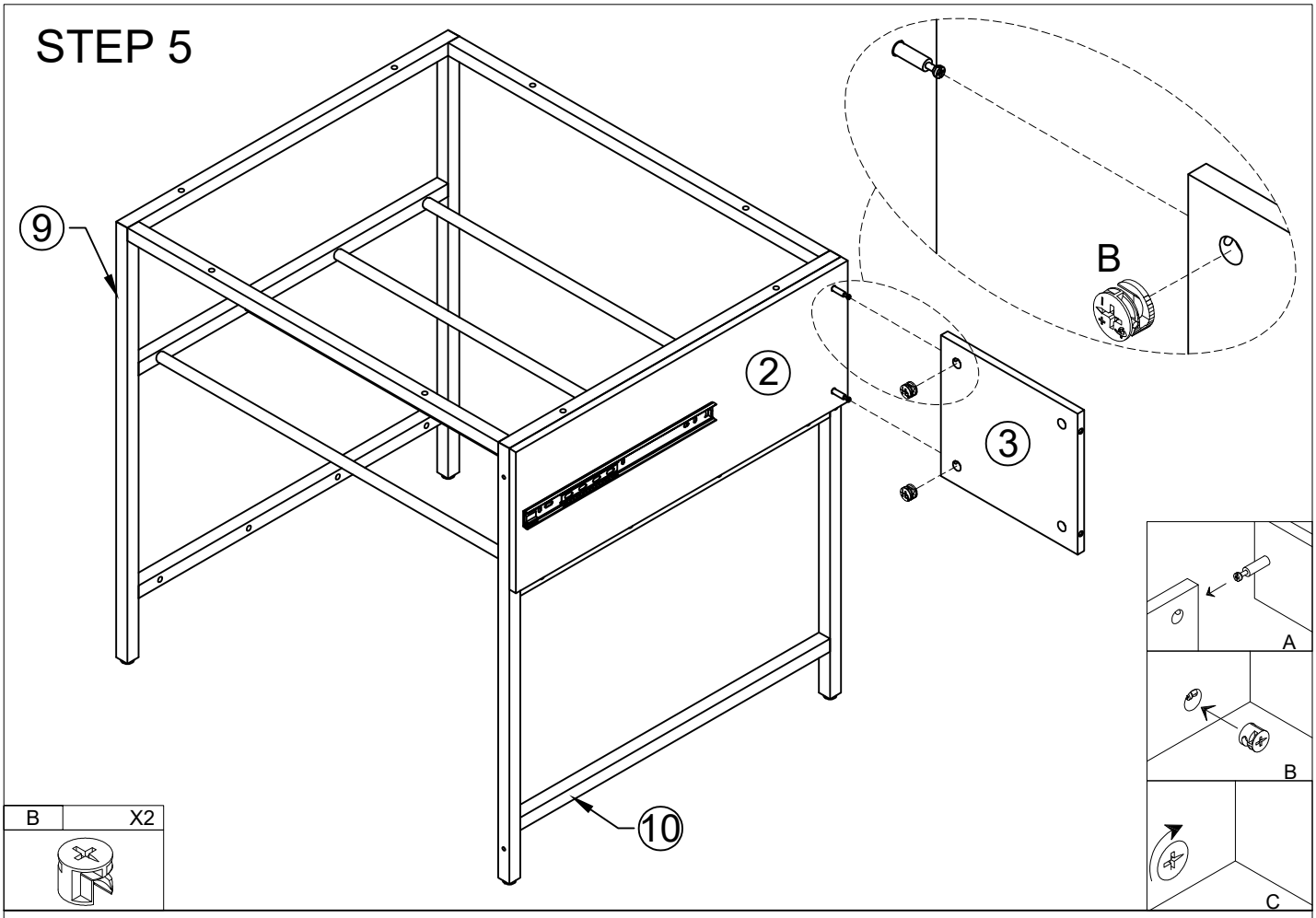

B	X2

STEP 6

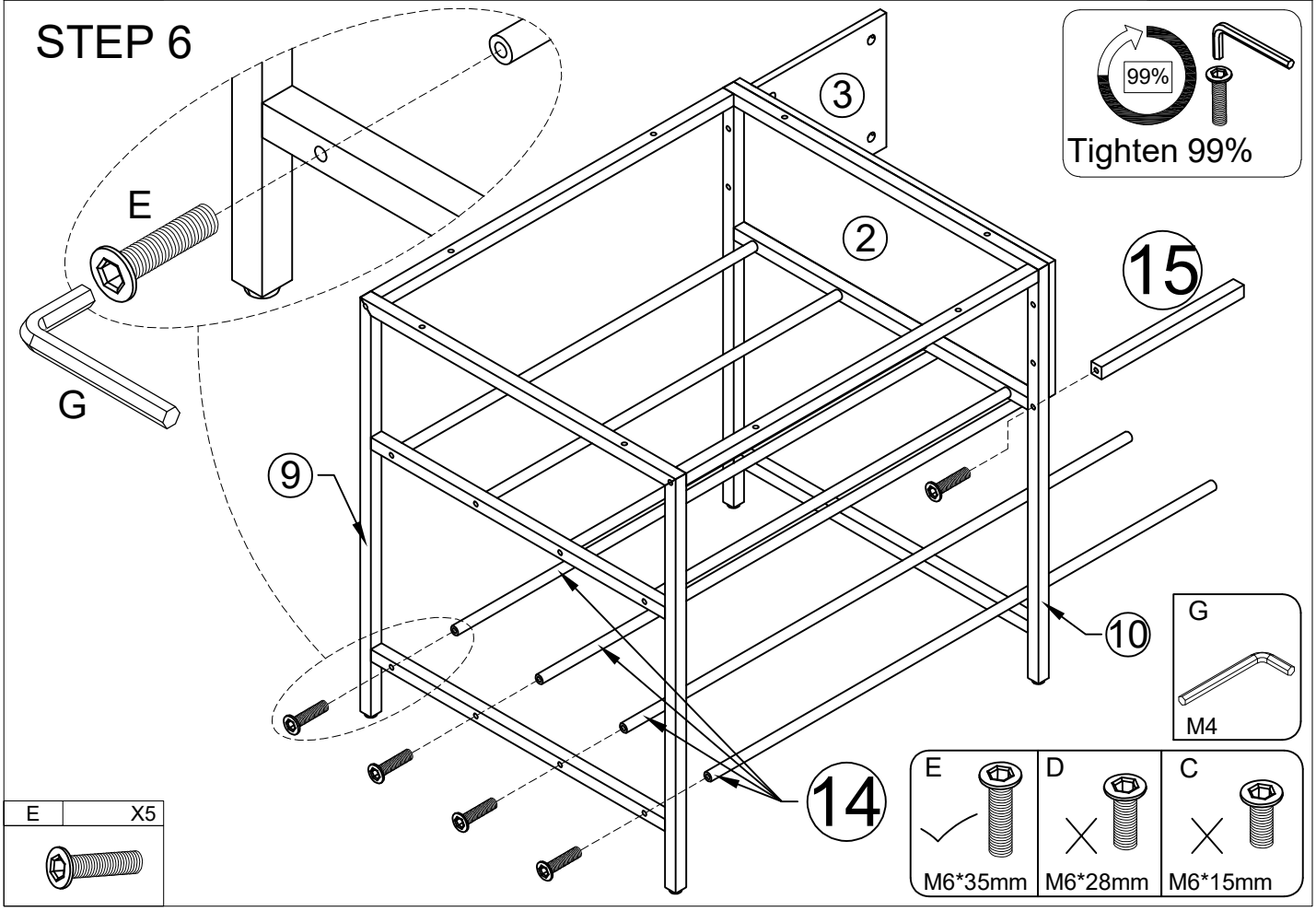

E	X5

INSTALLATION

STEP 7

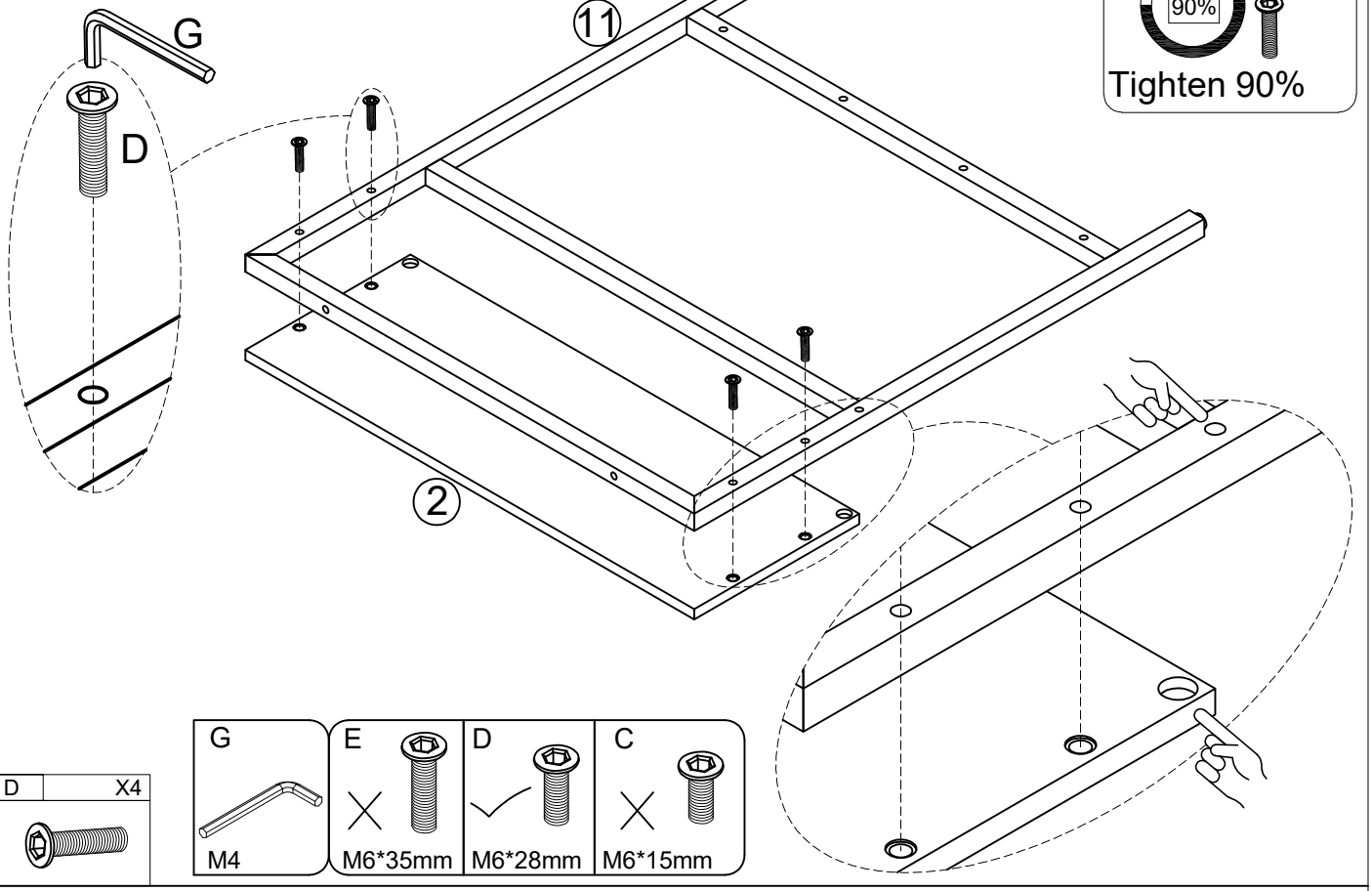

D	X4

G	E	D	C
M4	M6*35mm	M6*28mm	M6*15mm

STEP 8

180°

Do not use power tools for installation in this step.

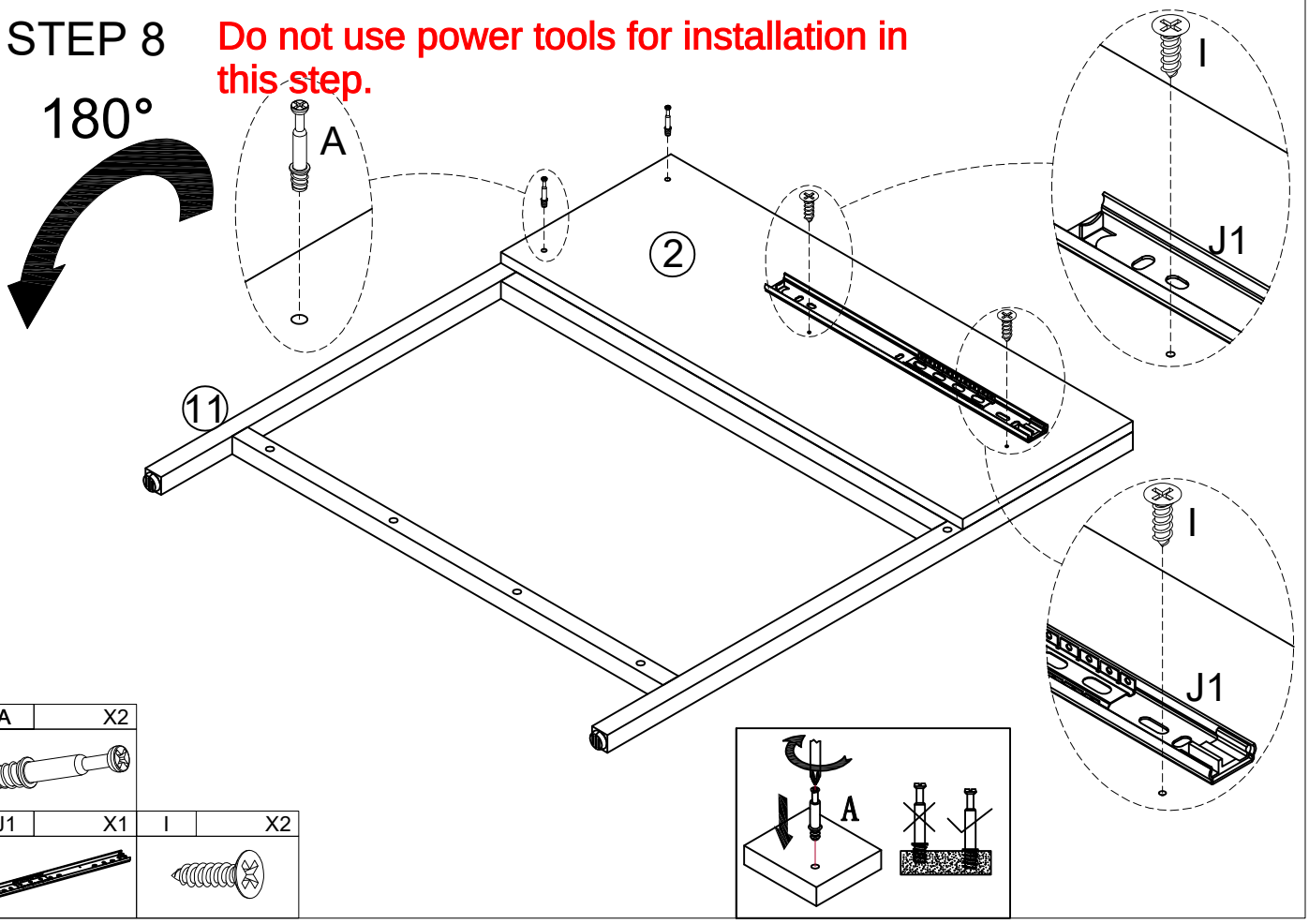

A	X2

J1	X1	I	X2

INSTALLATION

STEP 9

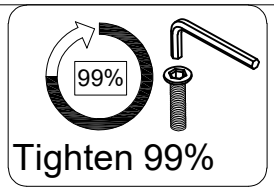

Tighten 99%

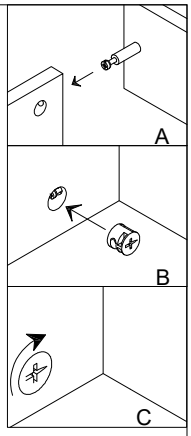

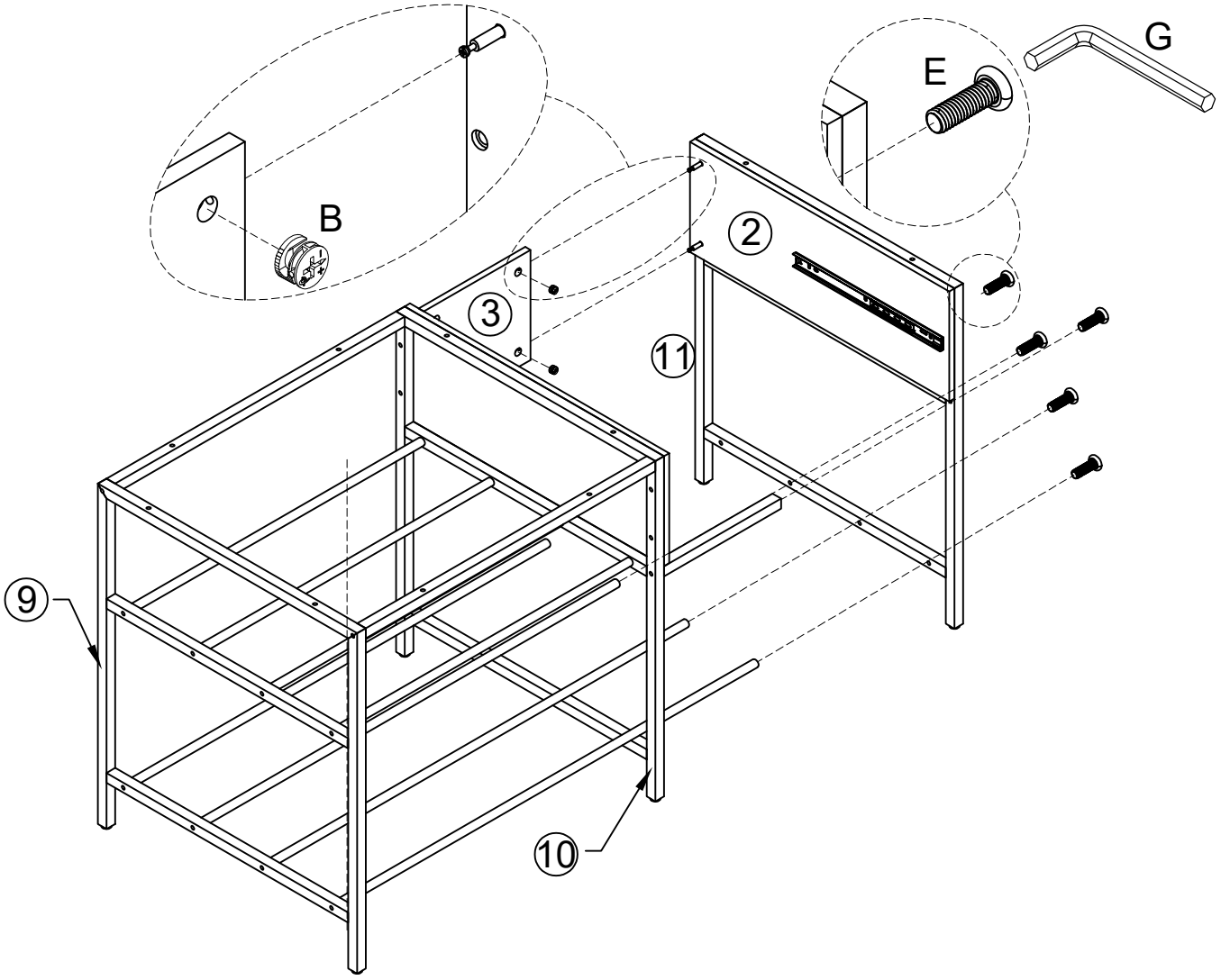

B	X2	E	X5
		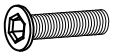	

G	E	D	C
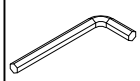	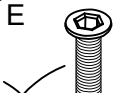	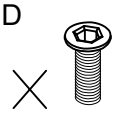	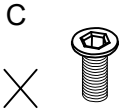
M4	M6*35mm	M6*28mm	M6*15mm

INSTALLATION

STEP 10

180°



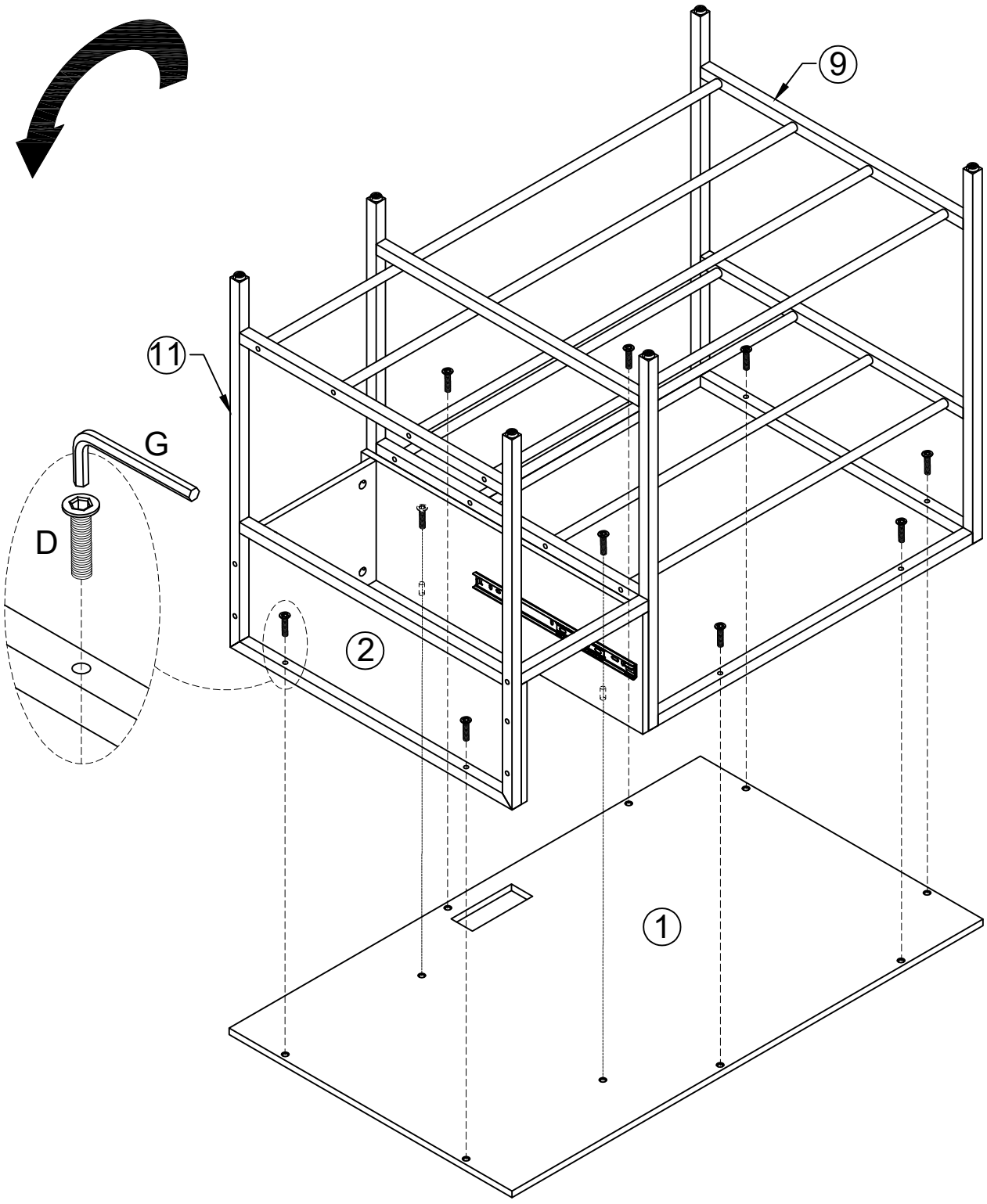

D	X10

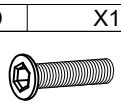

G	E	D	C
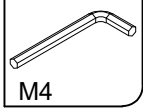	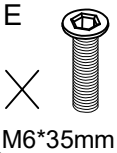	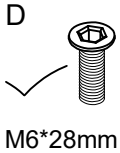	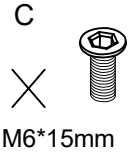
M4	M6*35mm	M6*28mm	M6*15mm

INSTALLATION

STEP 11

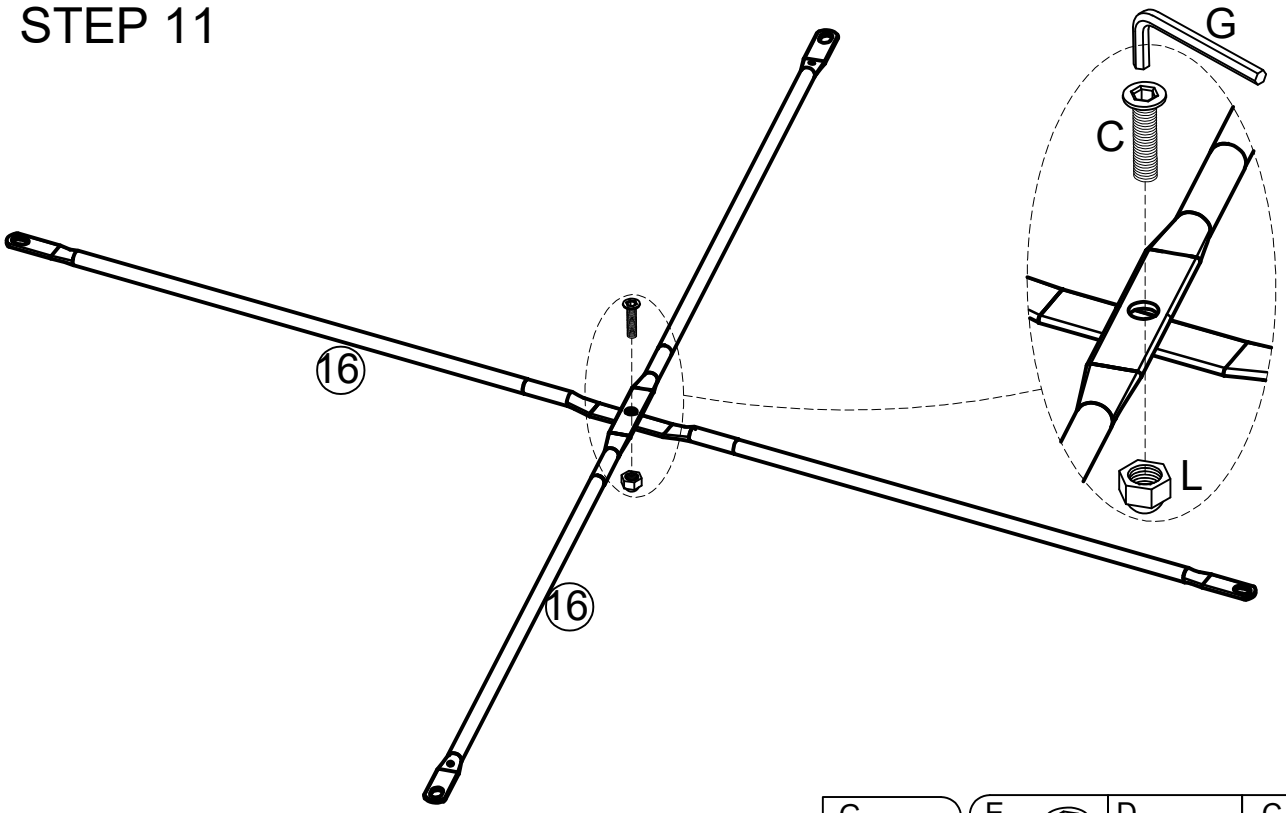

C	X1	L	X1

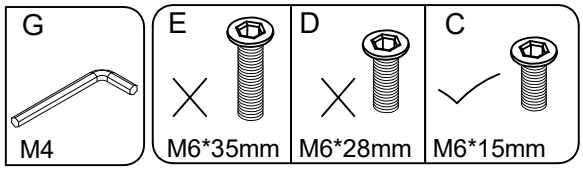

STEP 12

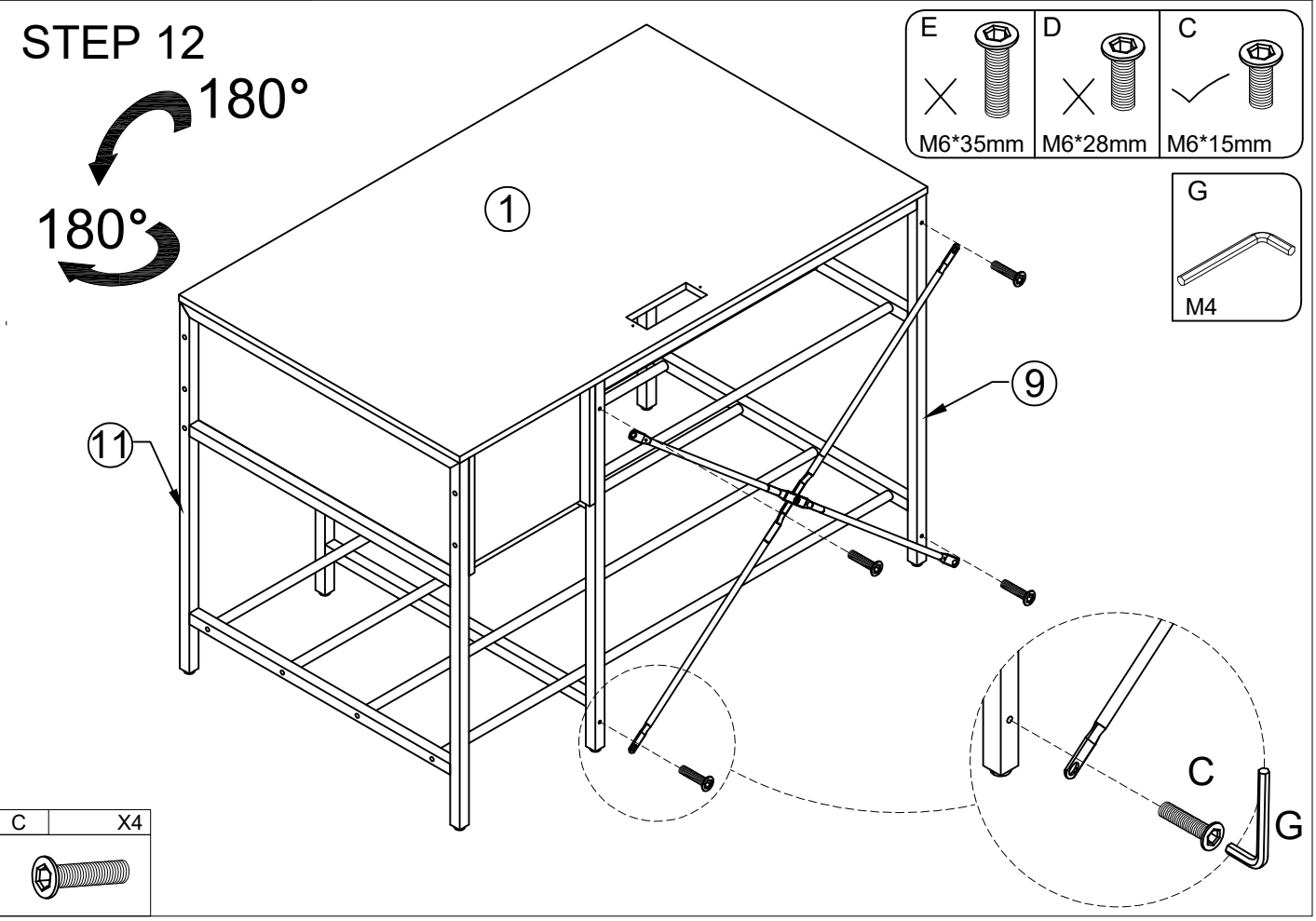

C	X4

INSTALLATION

STEP 13

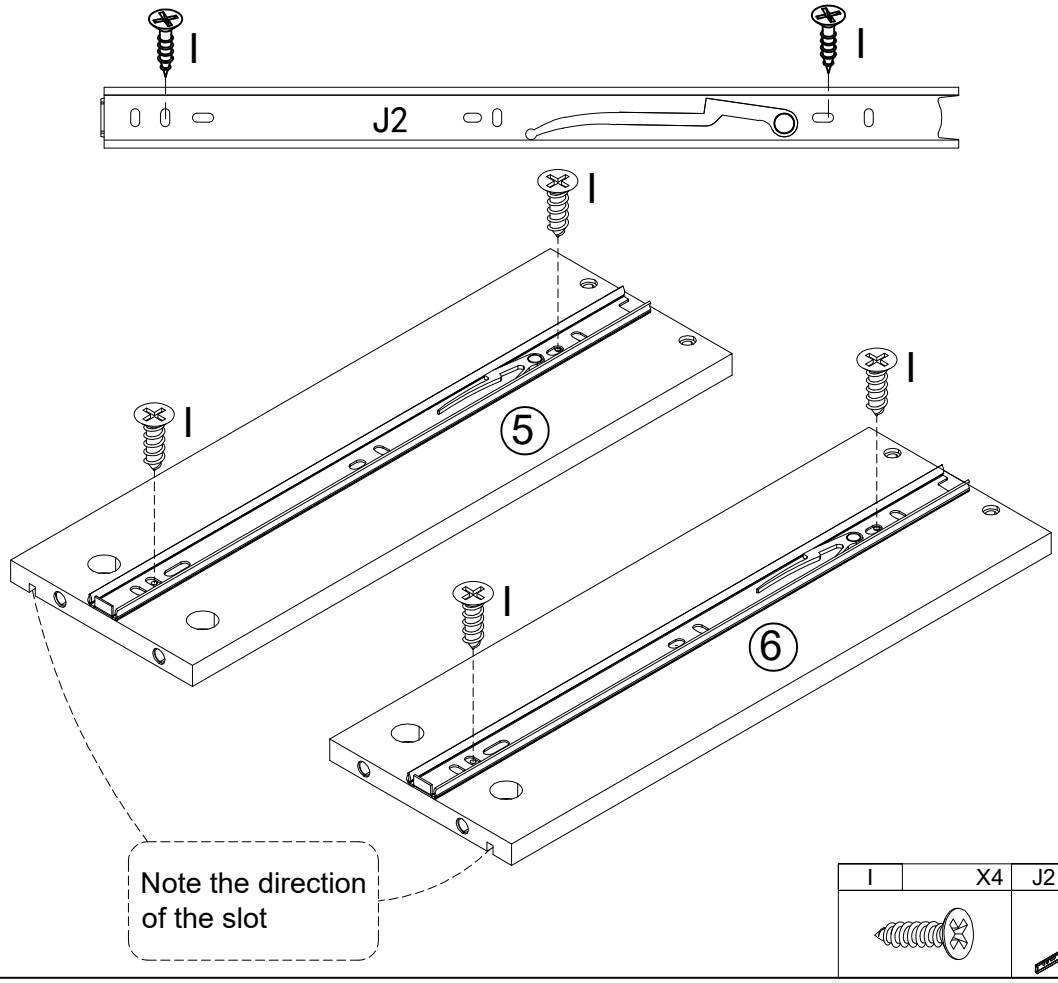

I	X4	J2	X2

STEP 14

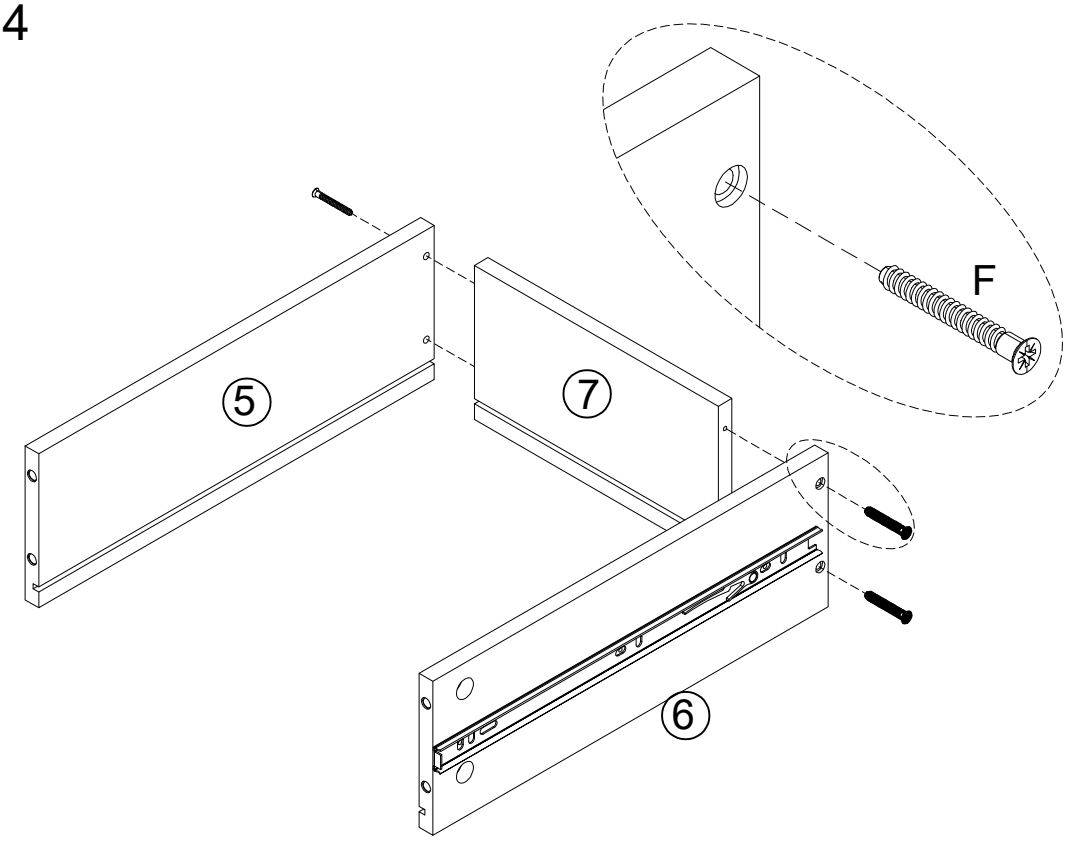

F	X4

INSTALLATION

STEP 15

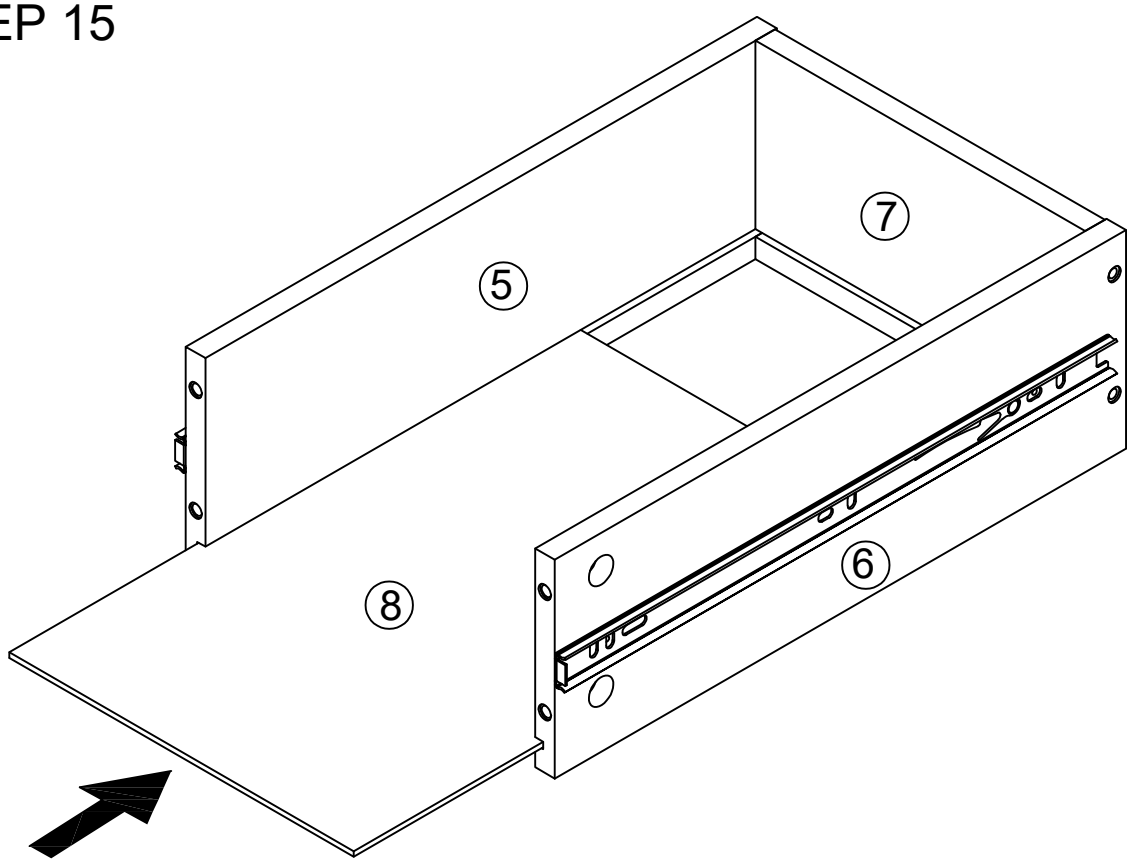

STEP 16

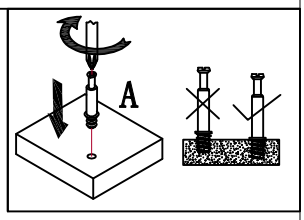

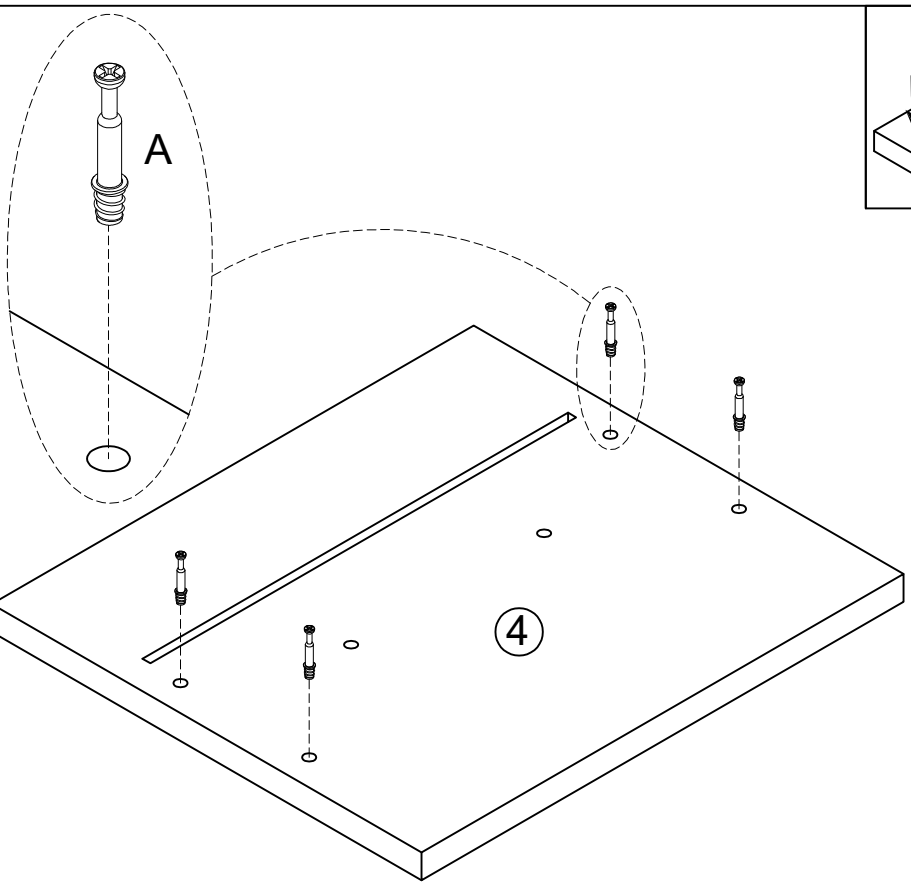

A	X4

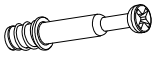

INSTALLATION

STEP 17

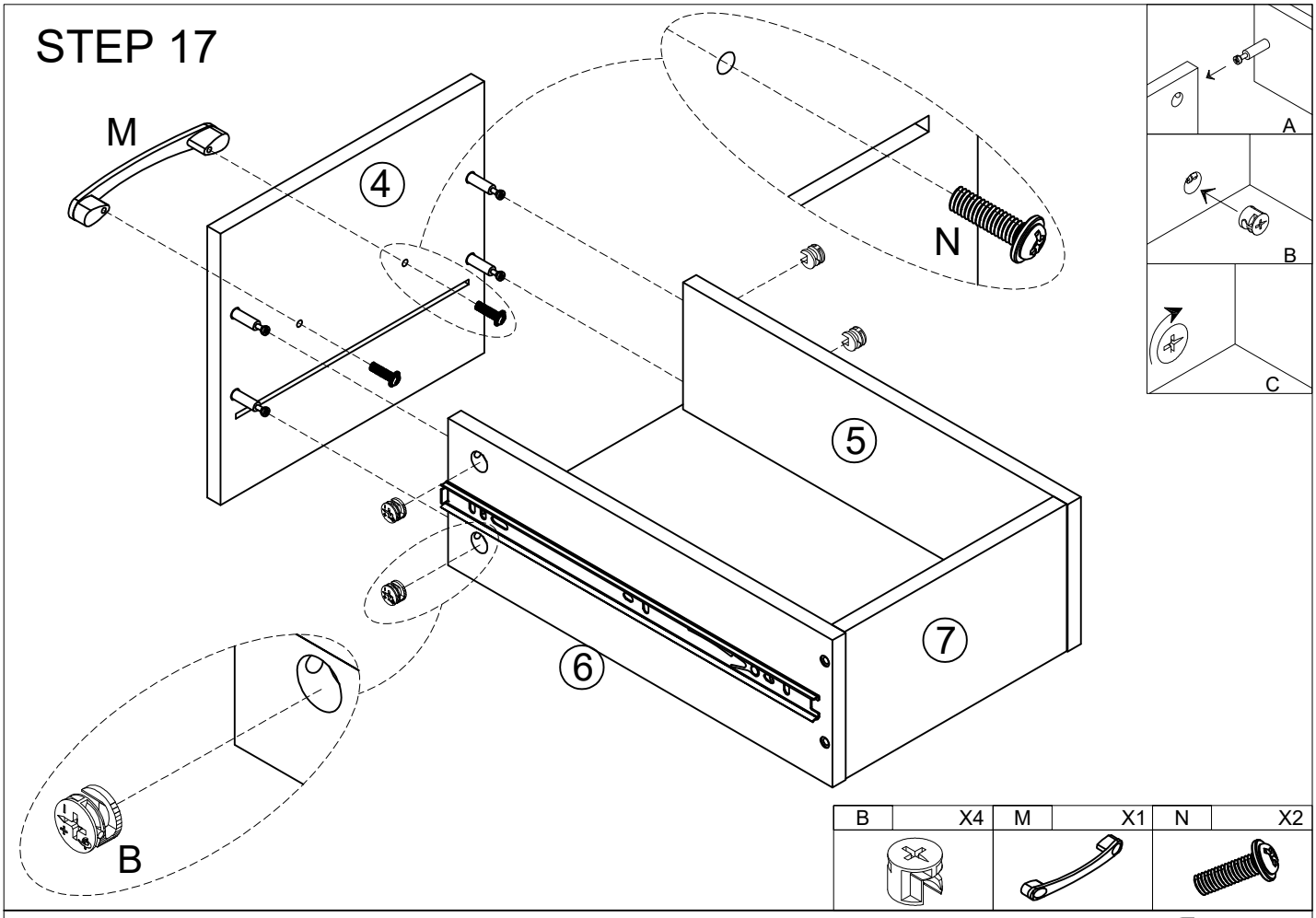

B	X4	M	X1	N	X2

STEP 18

Do not use power tools for installation in this step.

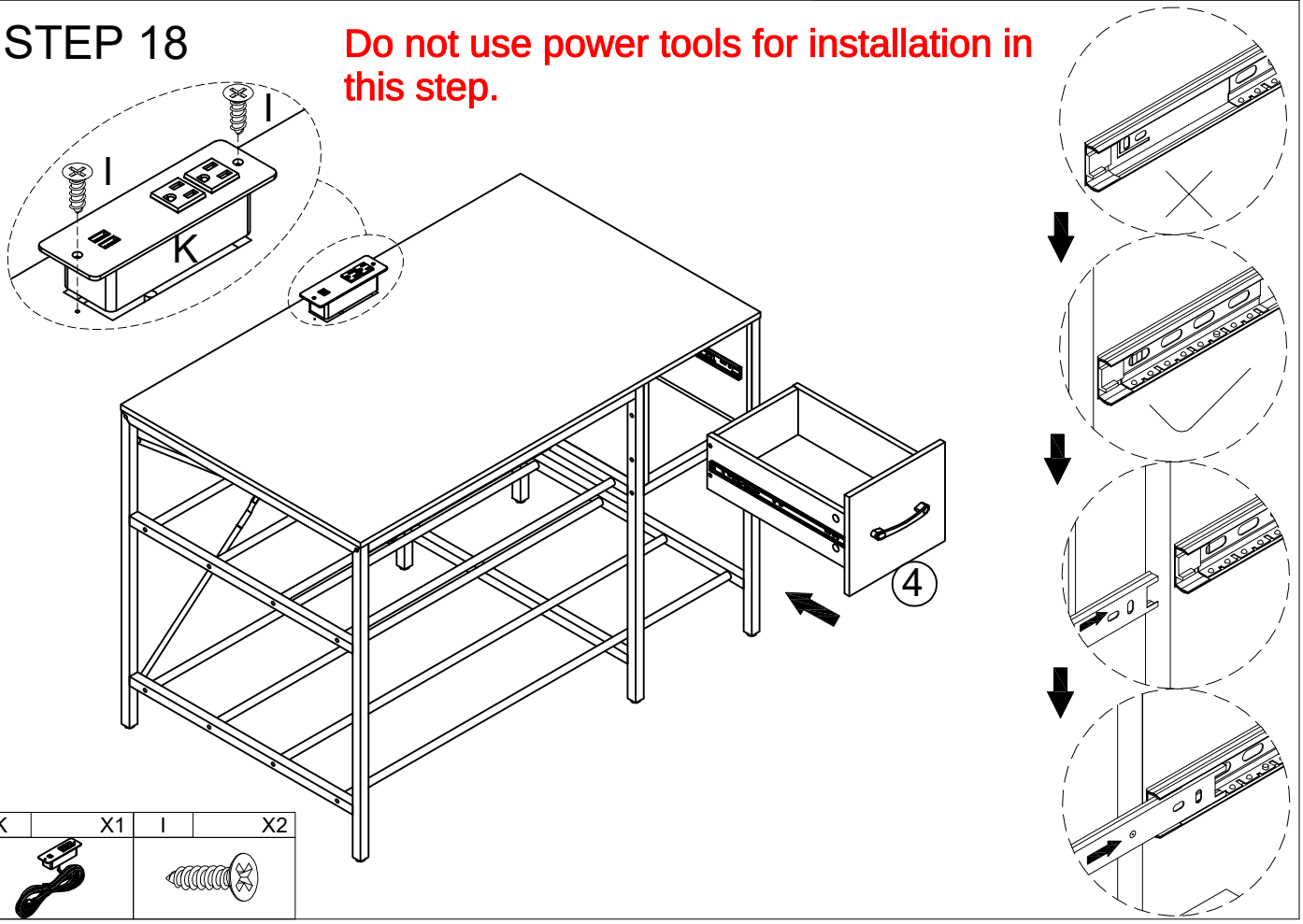

K	X1	I	X2

INSTALLATION

STEP 19

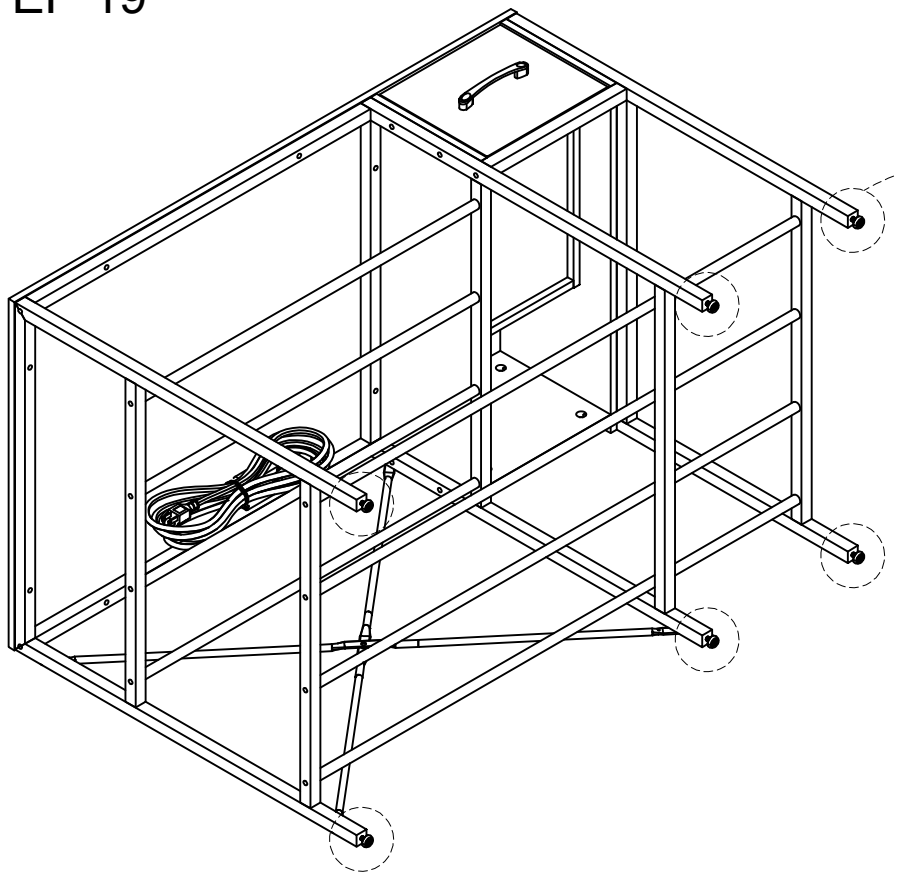

Adjust the height of these adjusting feet to ensure that the product is perfectly flush with the ground and to prevent any shaking.

O	X6
	

STEP 20

