ASSEMBLY INSTRUCTION

N652P537424B、25B/N652P537424G、25G

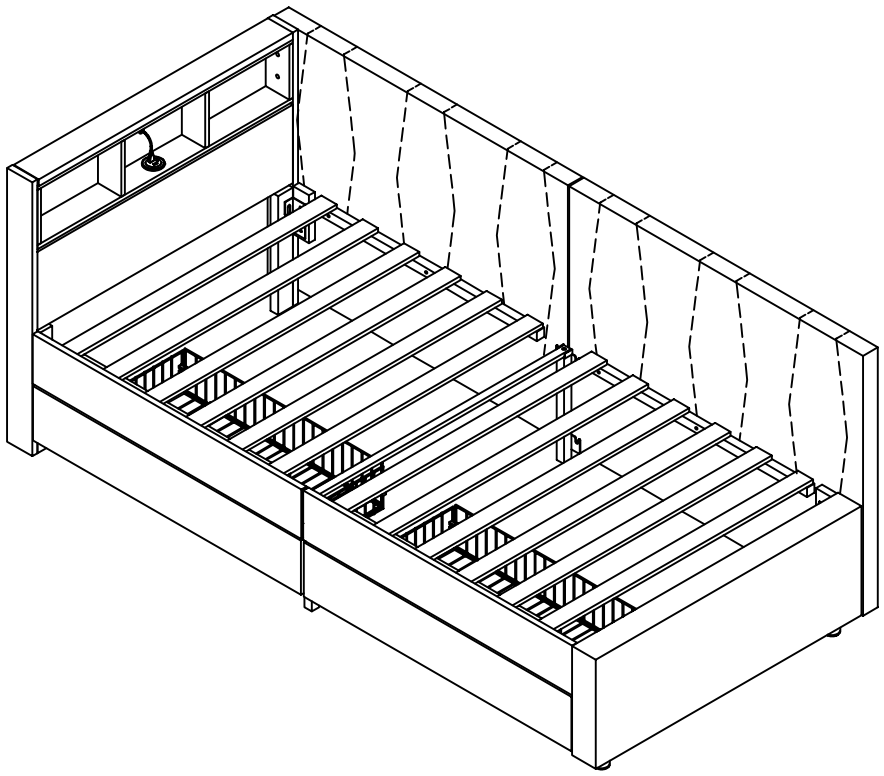

TIPS

1.This product is divided into 2 parcels for delivery. They may not arrive at the same time.Please wait patiently.

2.Please read the instructions fully before assembly. These instructions include important information which could ensure correct assembly. We have been working on providing high quality products for you. However, in the rare instance that your product is defective,missing parts or there are some issues, please don't hesitate to contact our customer service to submit parts requirements, assembly suggestion,or warranty claims, and we will give the best solution as soon as possible. If necessary, we need you to provide some more clear pictures of the issue.

3.Insert the screws in holes and tighten the screws, but not too tight, 70%~80% is ok, finally tighten all the screws. If some issues happened that some screws can not target to the hole or some parts are difficult to install, please adjust the tightness of the screws.

4.2 people are recommended to finish.

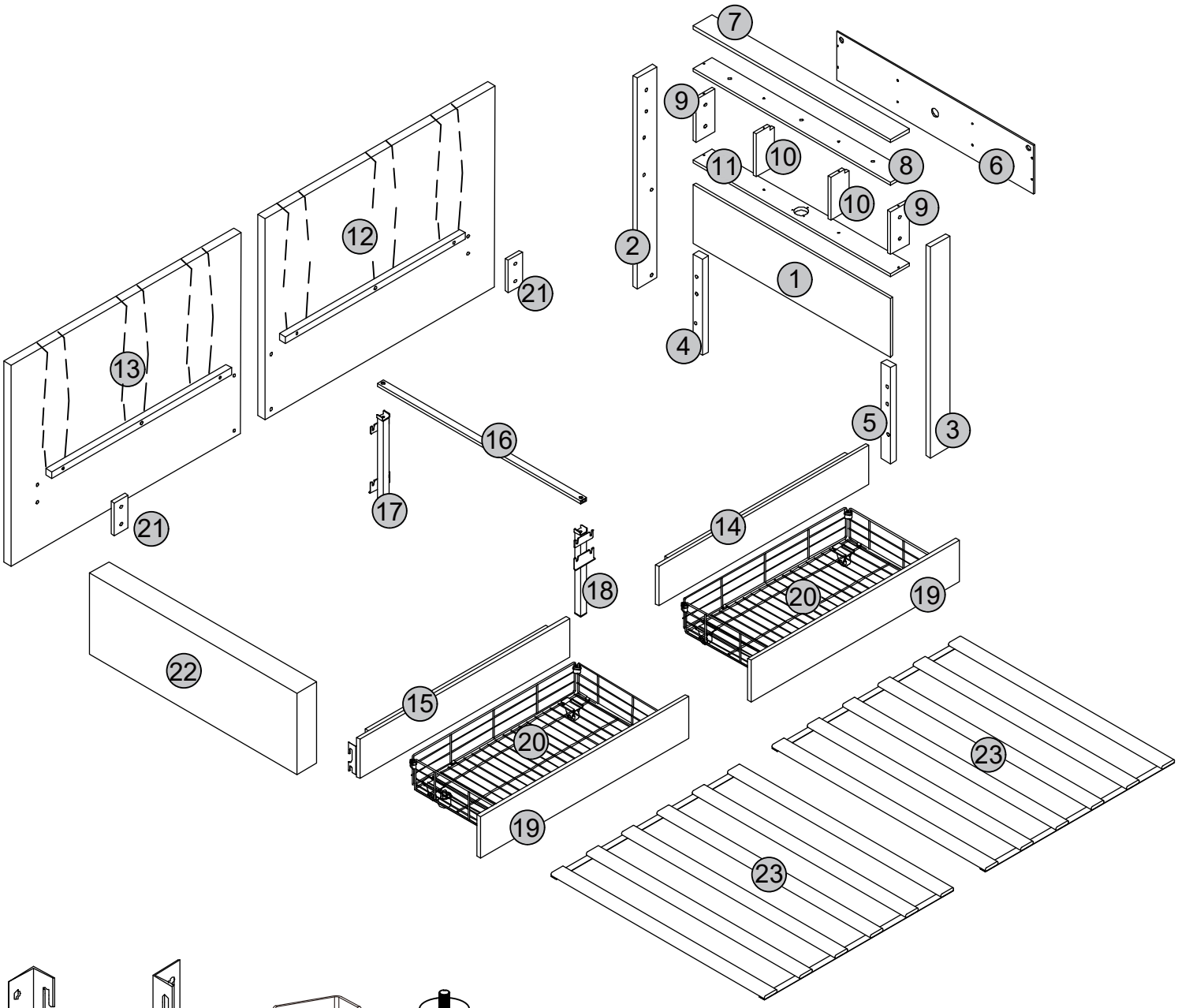

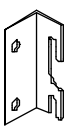

R



L

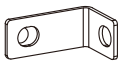

24 x 12



25 x 2

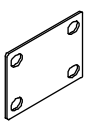

26 x 1

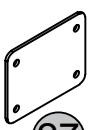

27 x 1



28 x 1

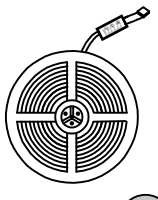

29 x 1

Part list

N652P537424B/N652P537424G

1 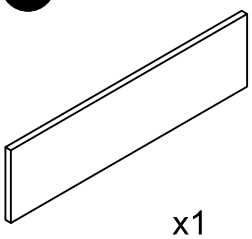 x1	2 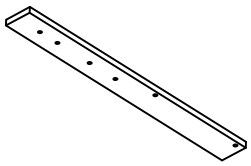 x1	3 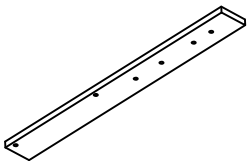 x1	6 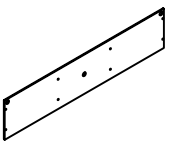 x1	7 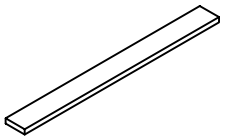 x1
8 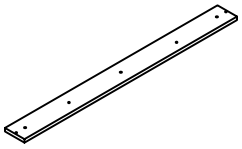 x1	9 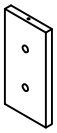 x2	10  x2	11 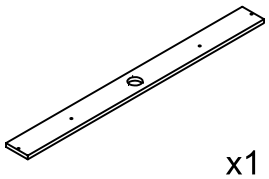 x1	22 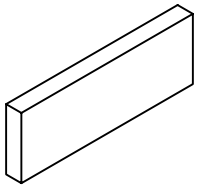 x1
21 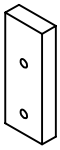 x2				23 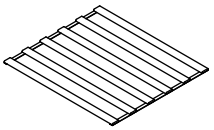 x2

Part list

N652P537425B/N652P537425G

4  x1	5  x1	12 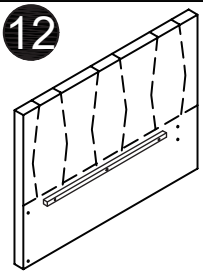 x1	13 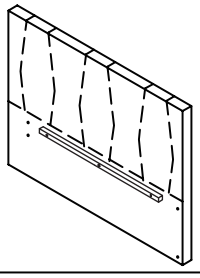 x1	14 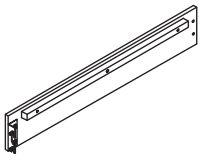 x1
15 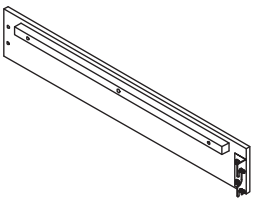 x1	16 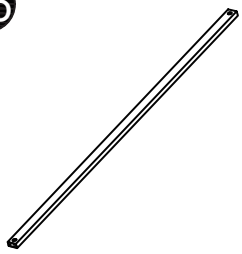 x1	17 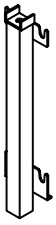 x1	18 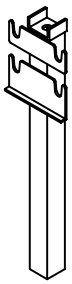 x1	19 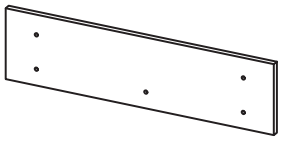 x2
20 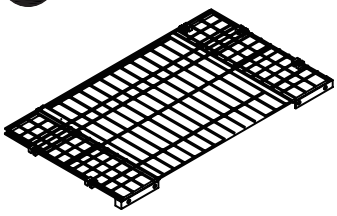 x2	24 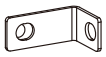 x12	25  x2	26 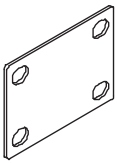 x1	27 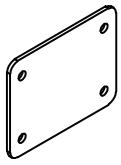 x 1
28 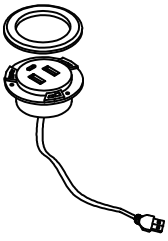 x 1	29  x 1	T 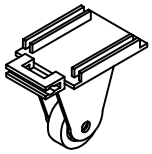 x 8	S  x 4	
U 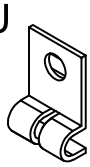 x2	R 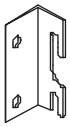 x 1	L  x 1		

Hardware list

N652P537425B/N652P537425G

A	B	C	D	E	F	G	H	J	K	N	O			
M8x25 x7	M8x10 x2	**M8x45** x4	M8x15 x36	M8x20 x4	M8x30 x2	M5x30 **x 16**	M6x10 x10	M8 x 1	M6 x 1	3.5x12 x7	**x 1**			

Step 1:



x 8

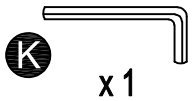

x 1

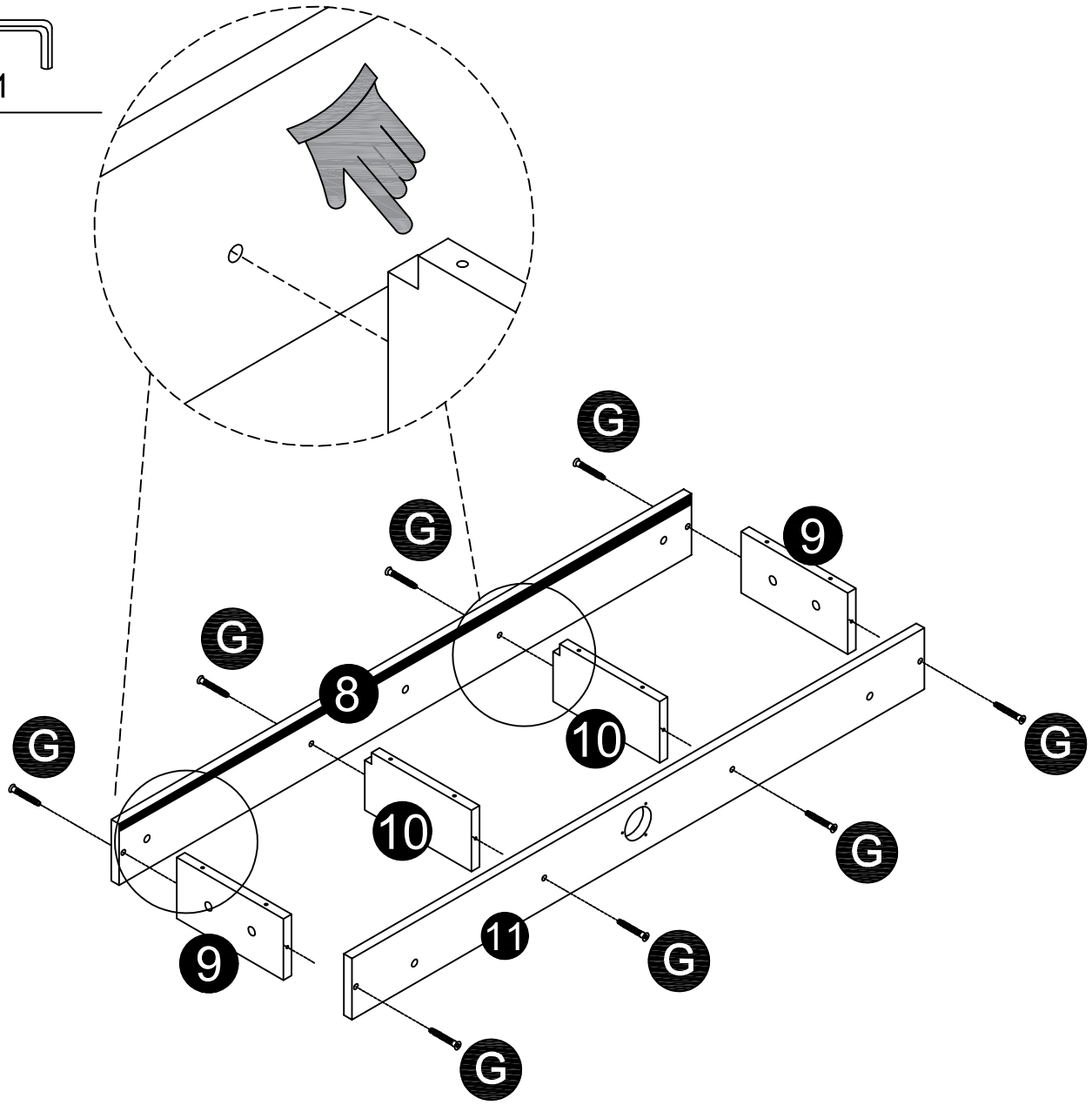

Step 2:

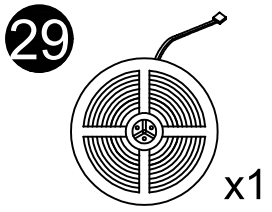

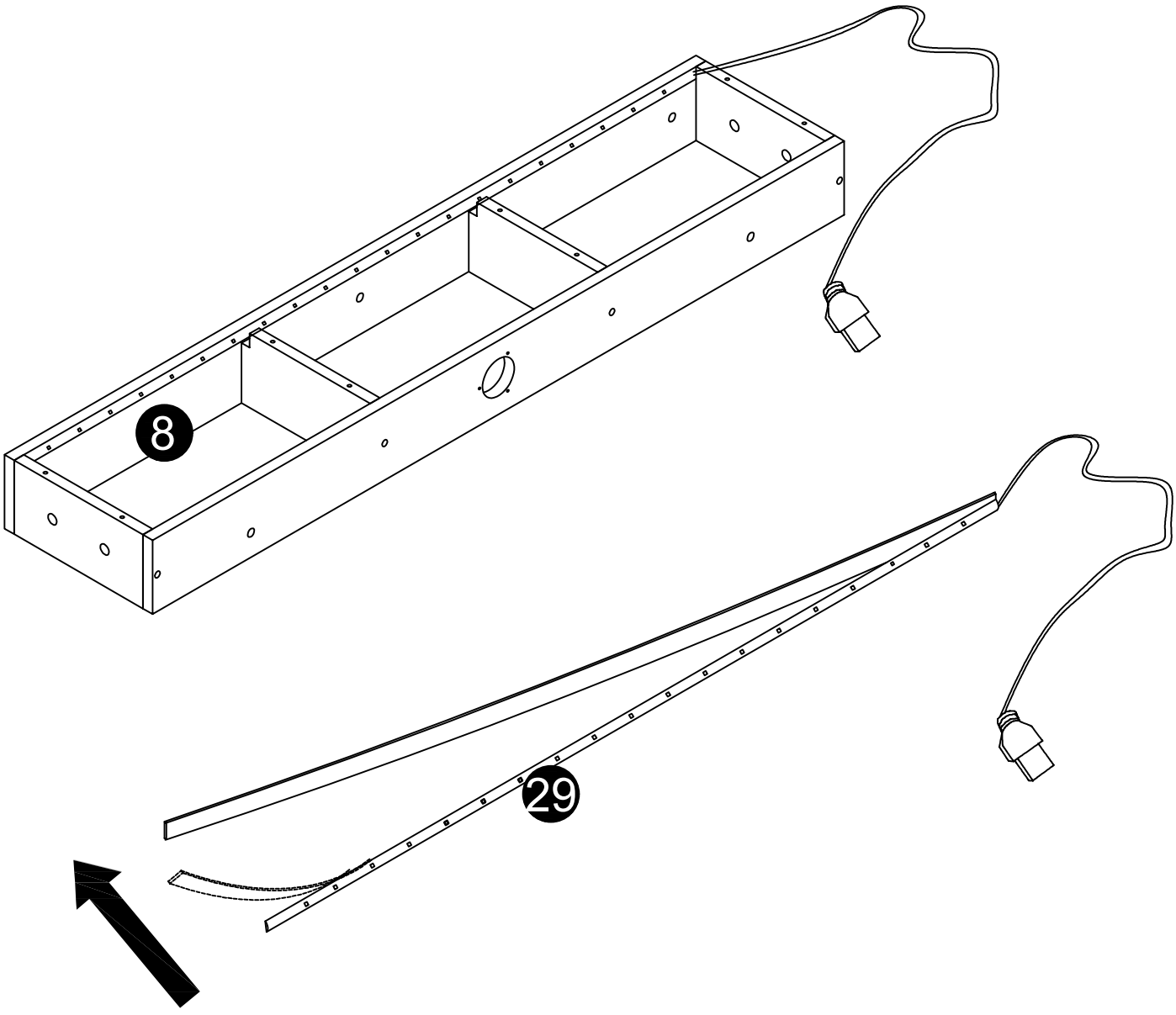

Step 3:

G x 8

K x 1

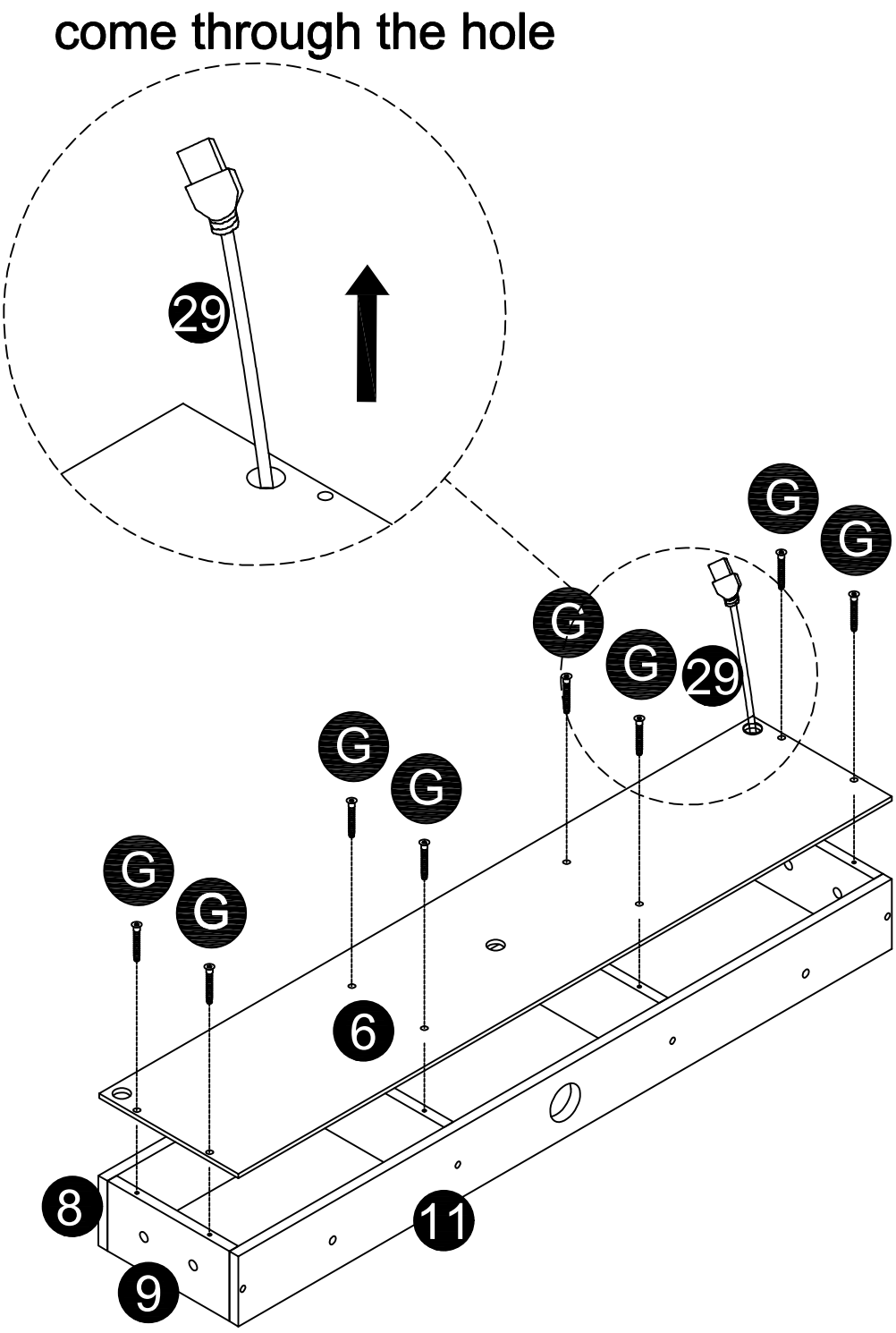

Step 4:

A x 7

J x 1

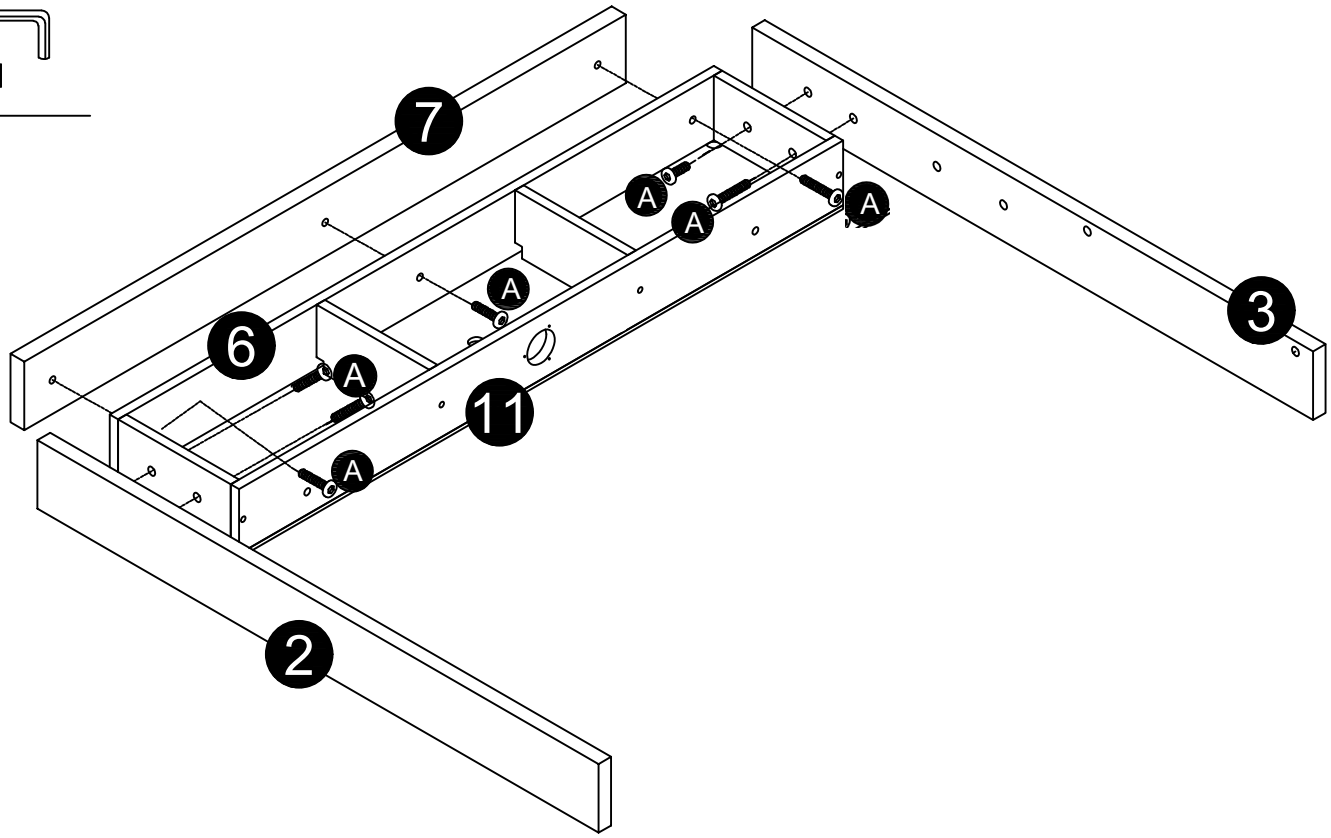

Step5:

B x2

D x18

K x 1

J x 1

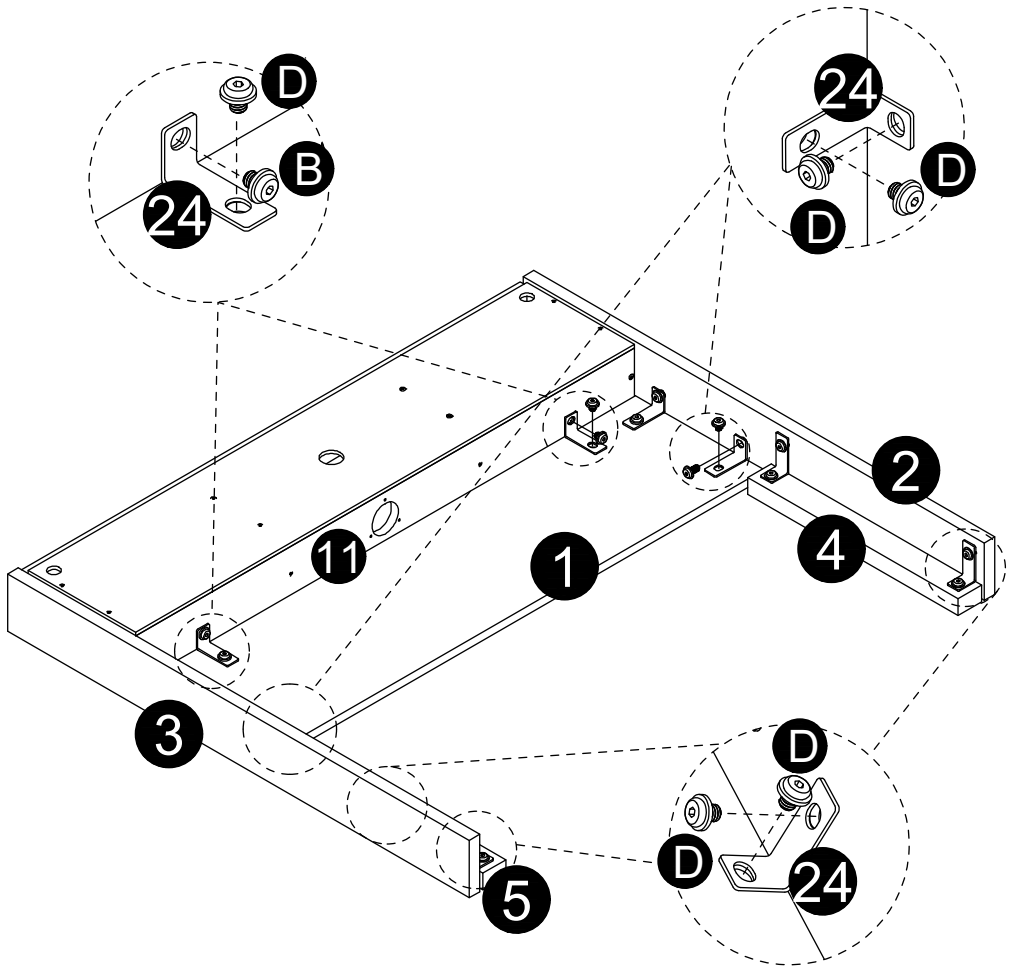

Step 6:

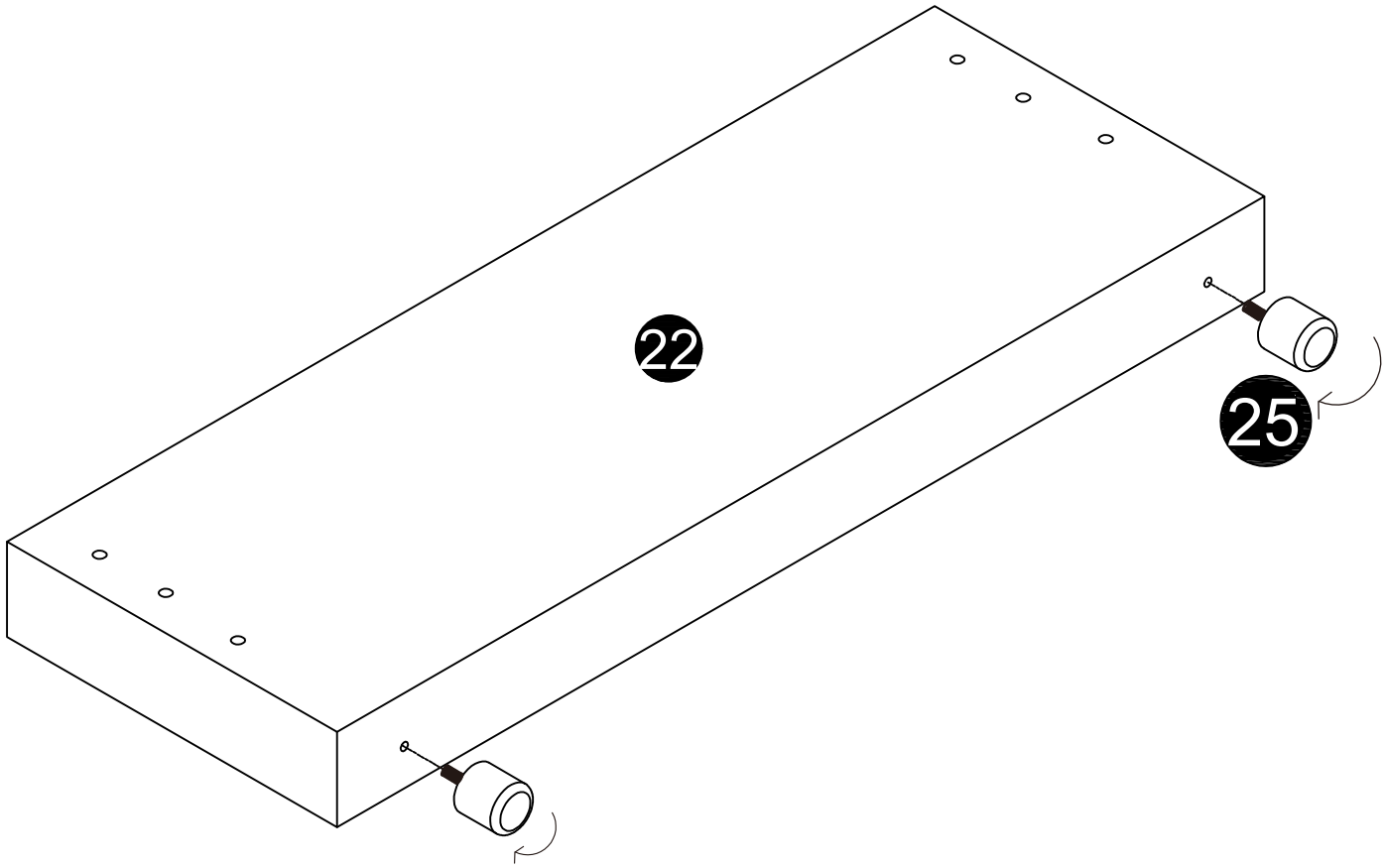

Step 7 :

D x4

E x4

C x 4

J x 1

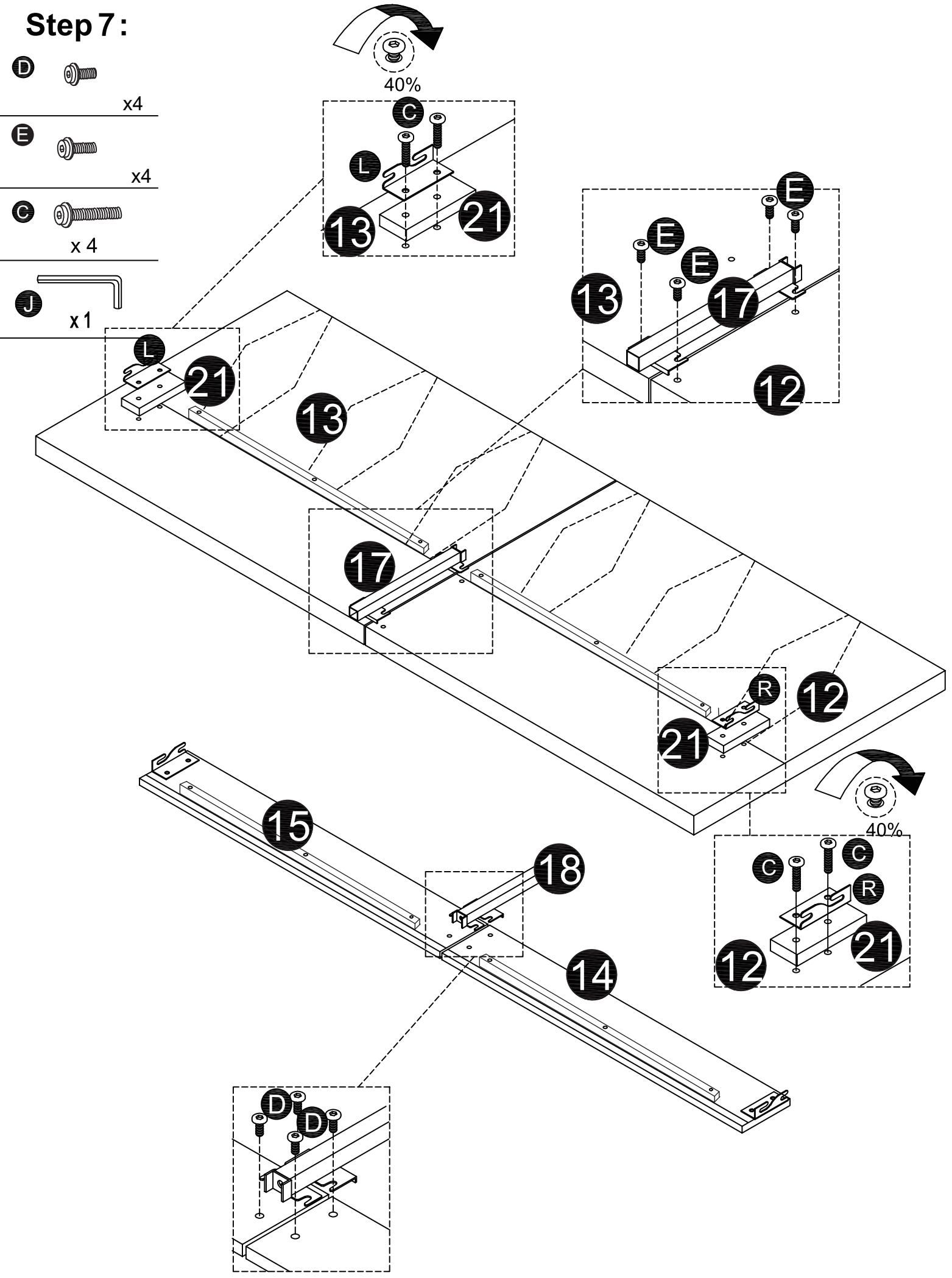

Step 8:

D x 8

J x 1

N x 3

O x 1

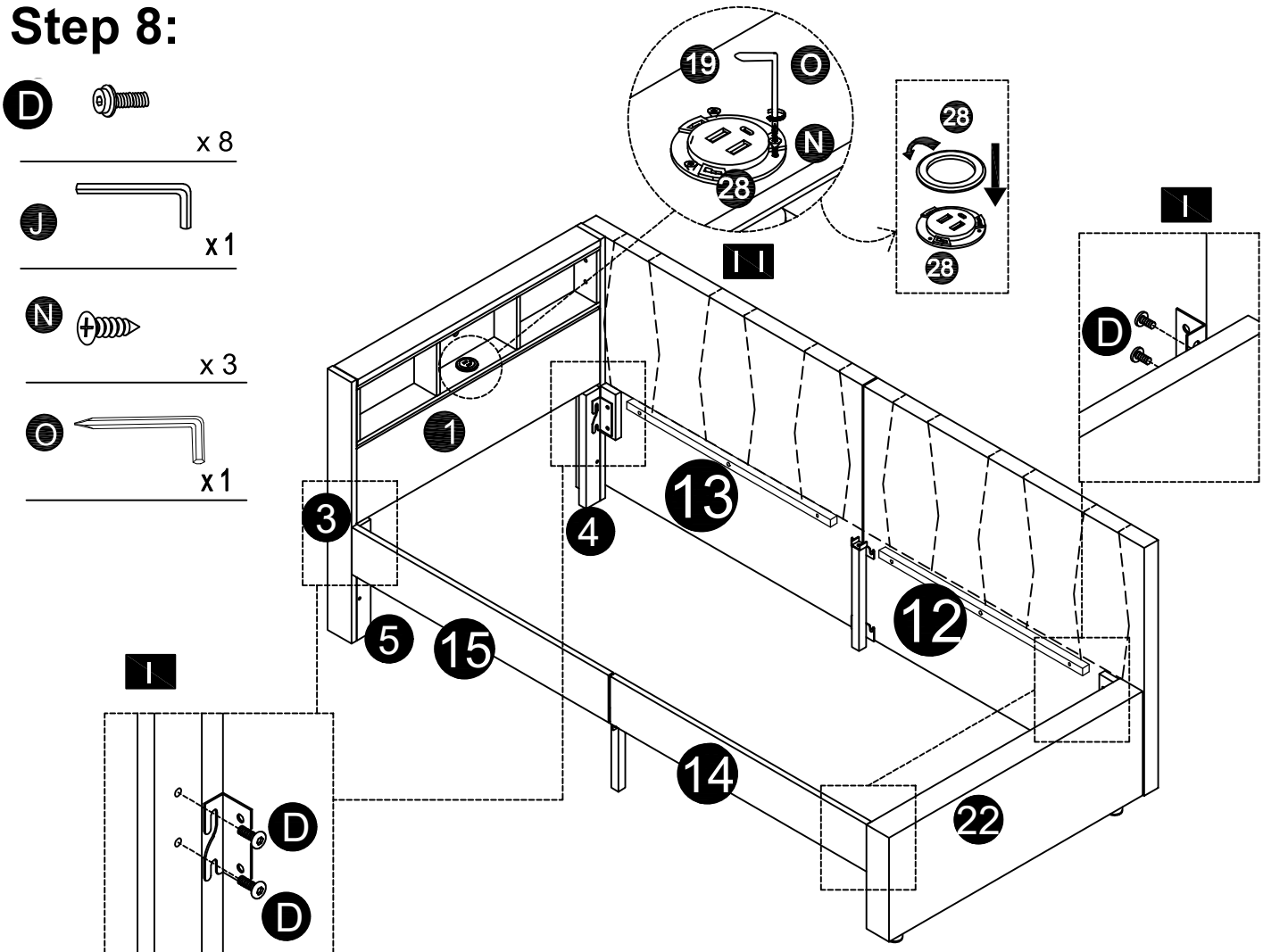

OR

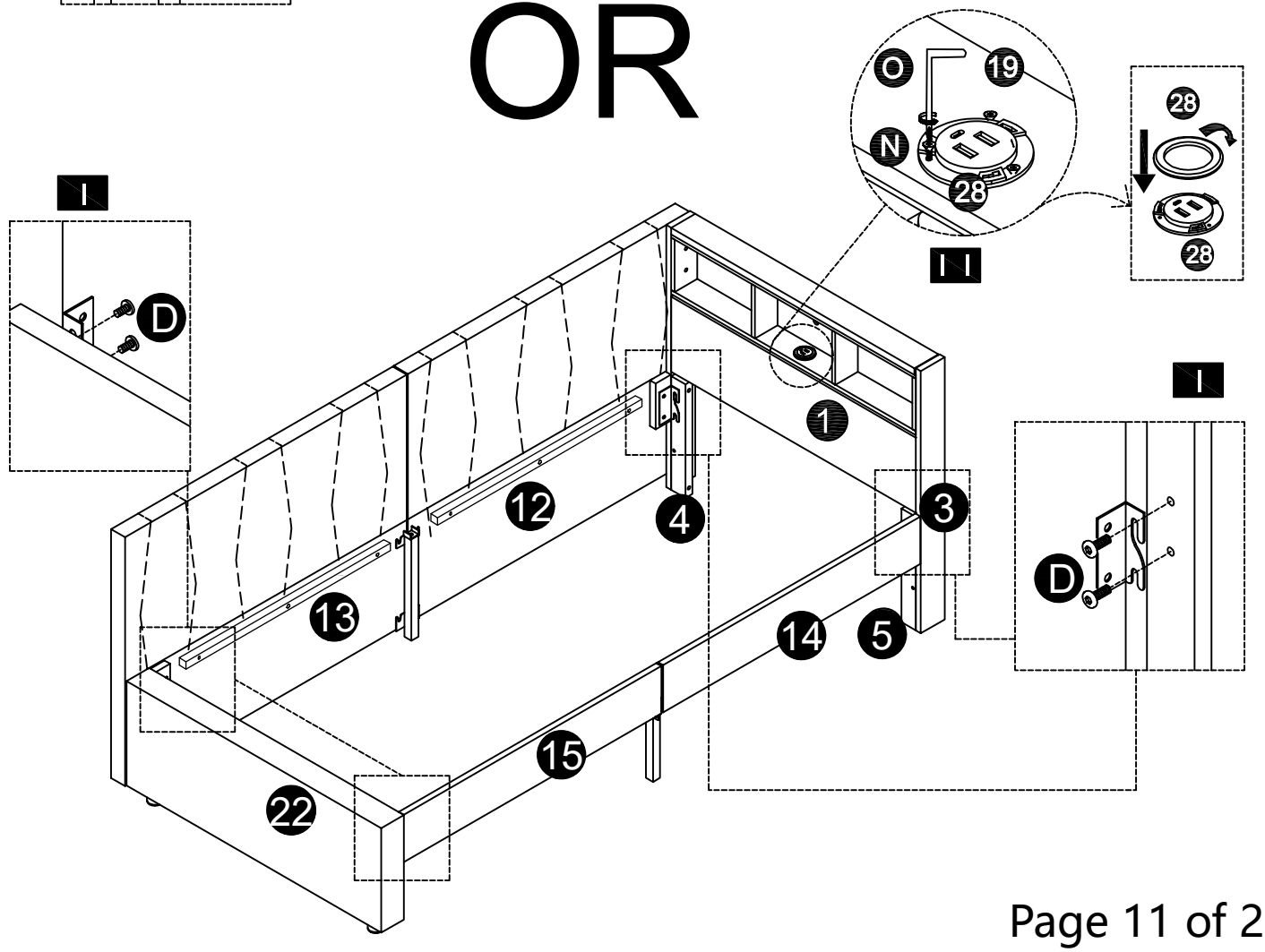

Step 9:

F x2

D x2

J x1

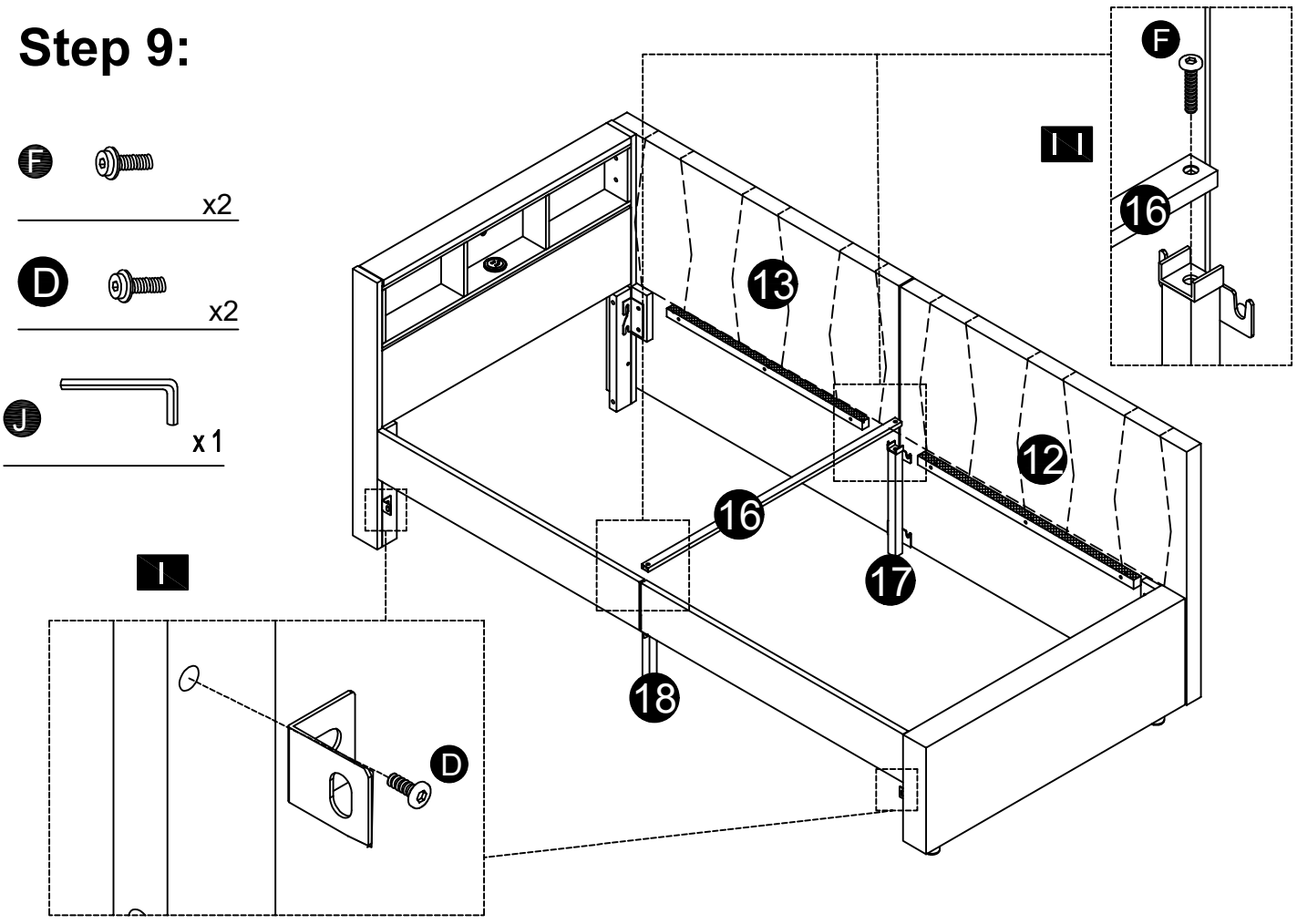

OR

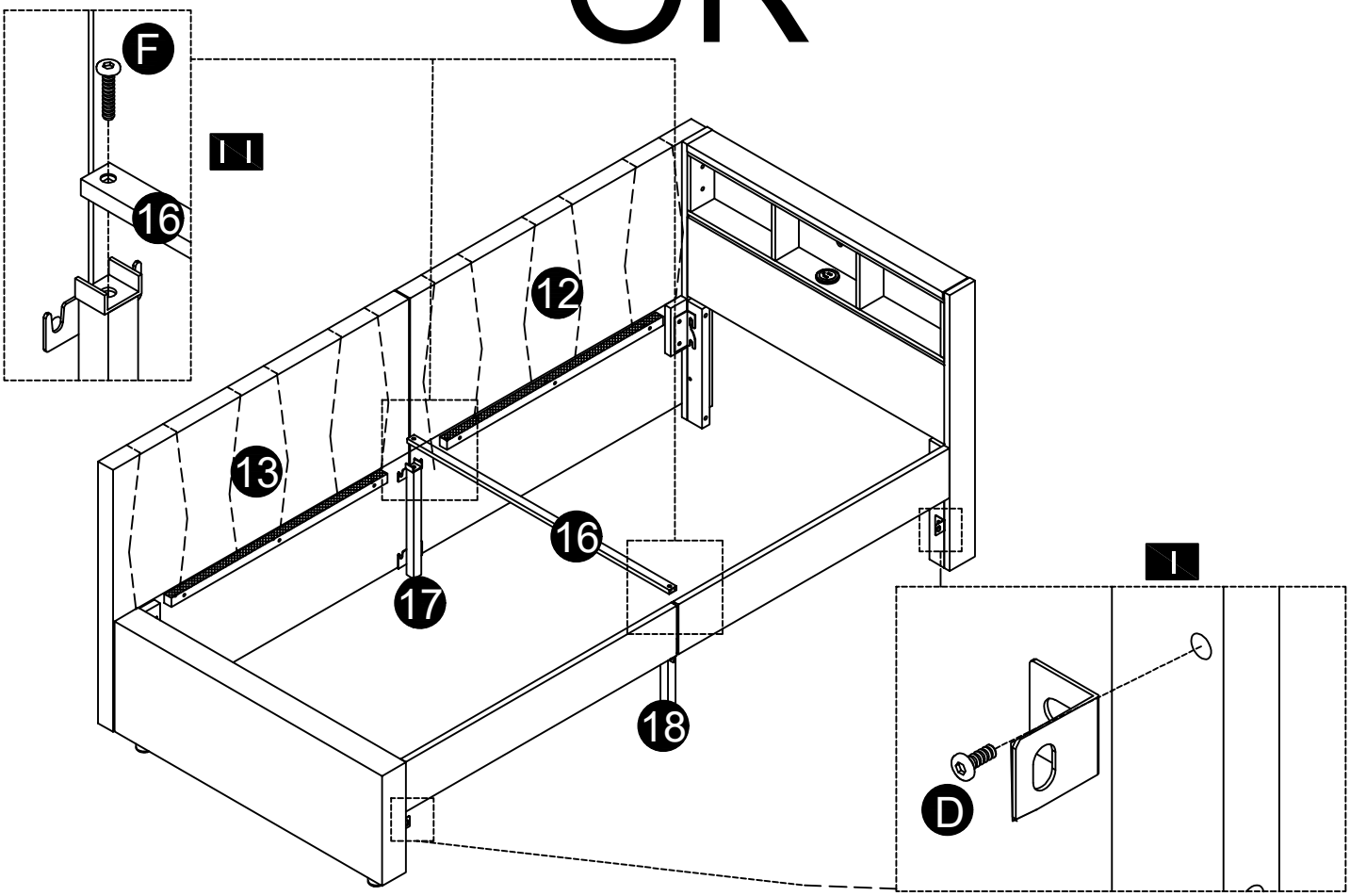

Step 10:

N x 4

O

D x 4

J x 1

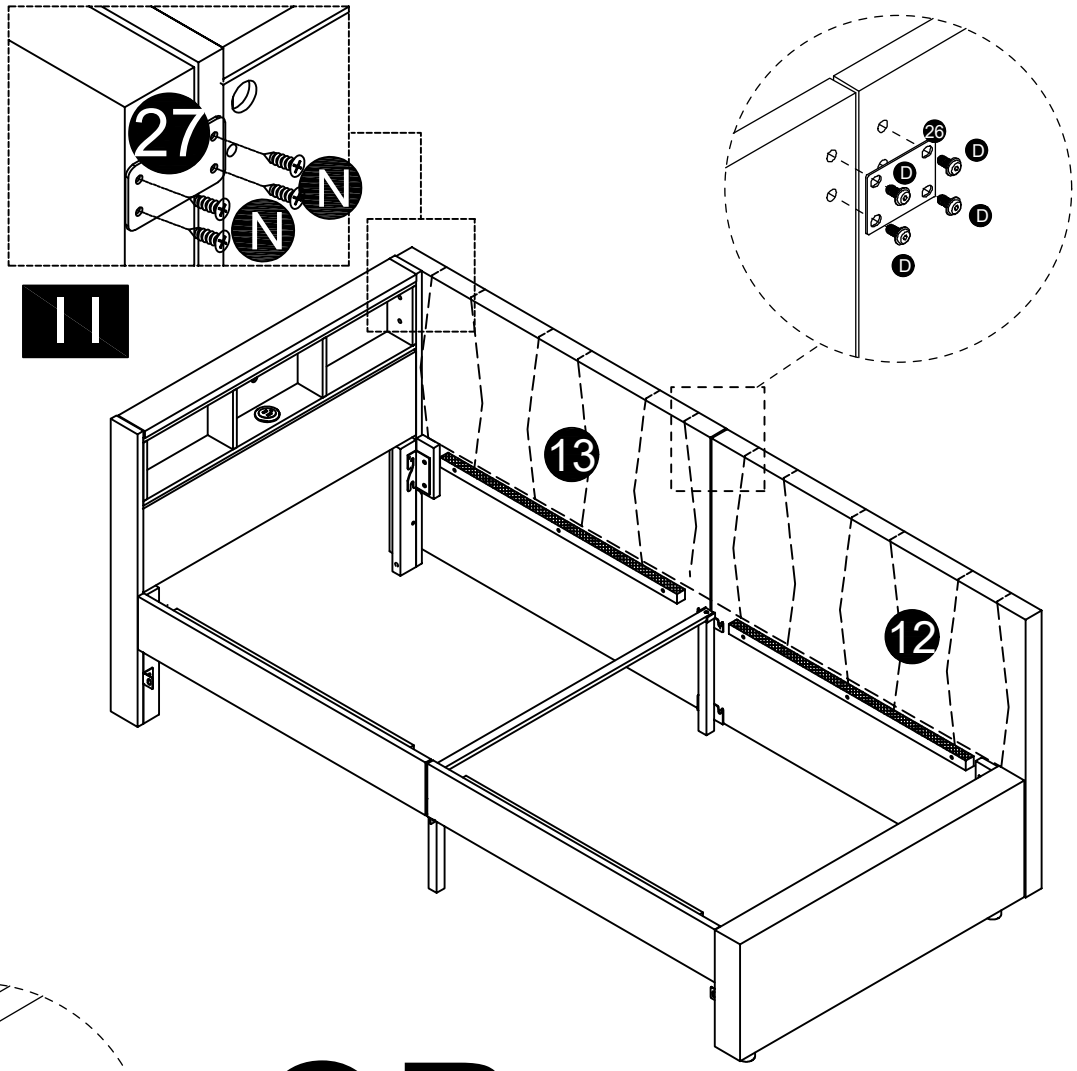

OR

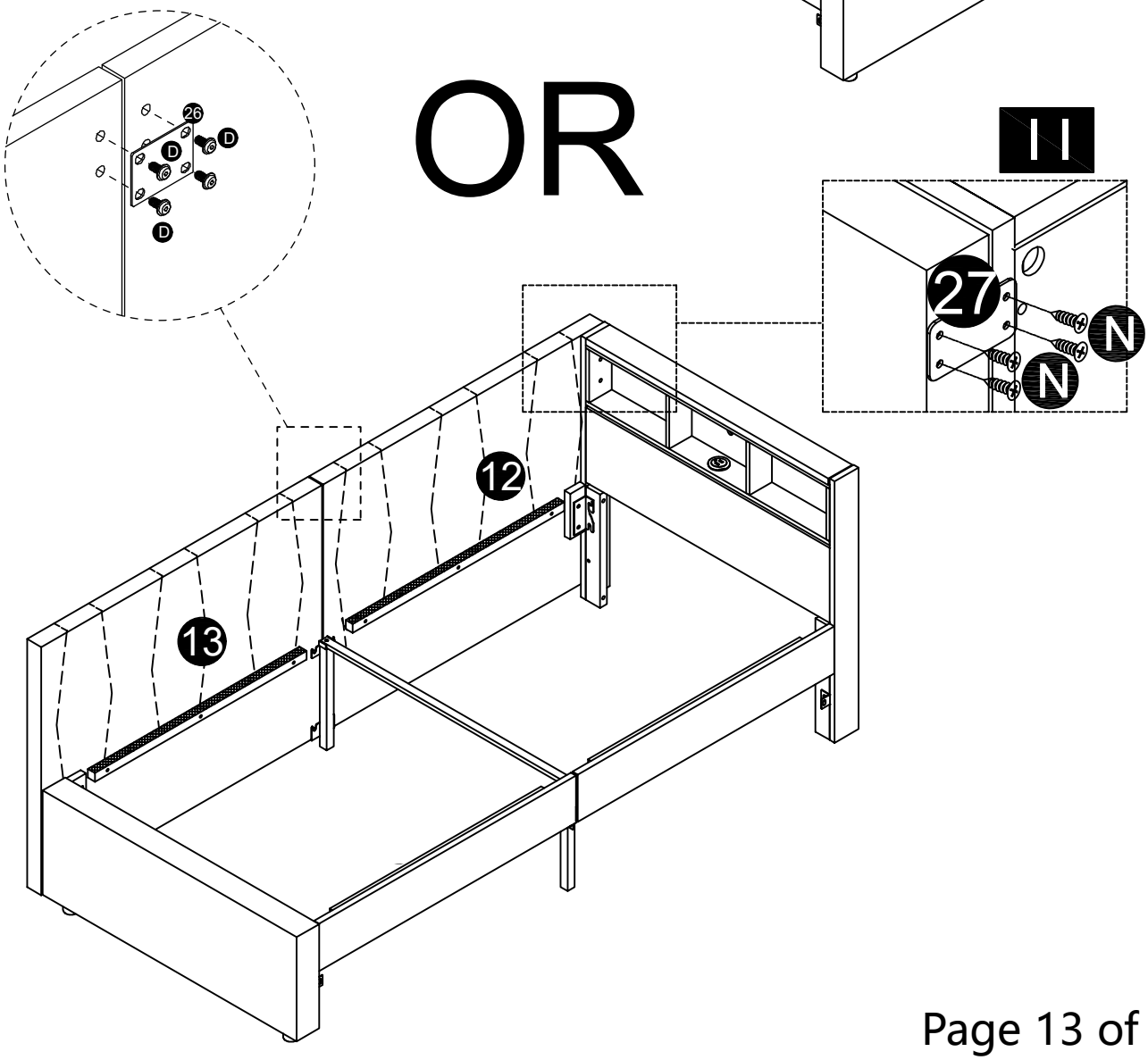

Step 11:

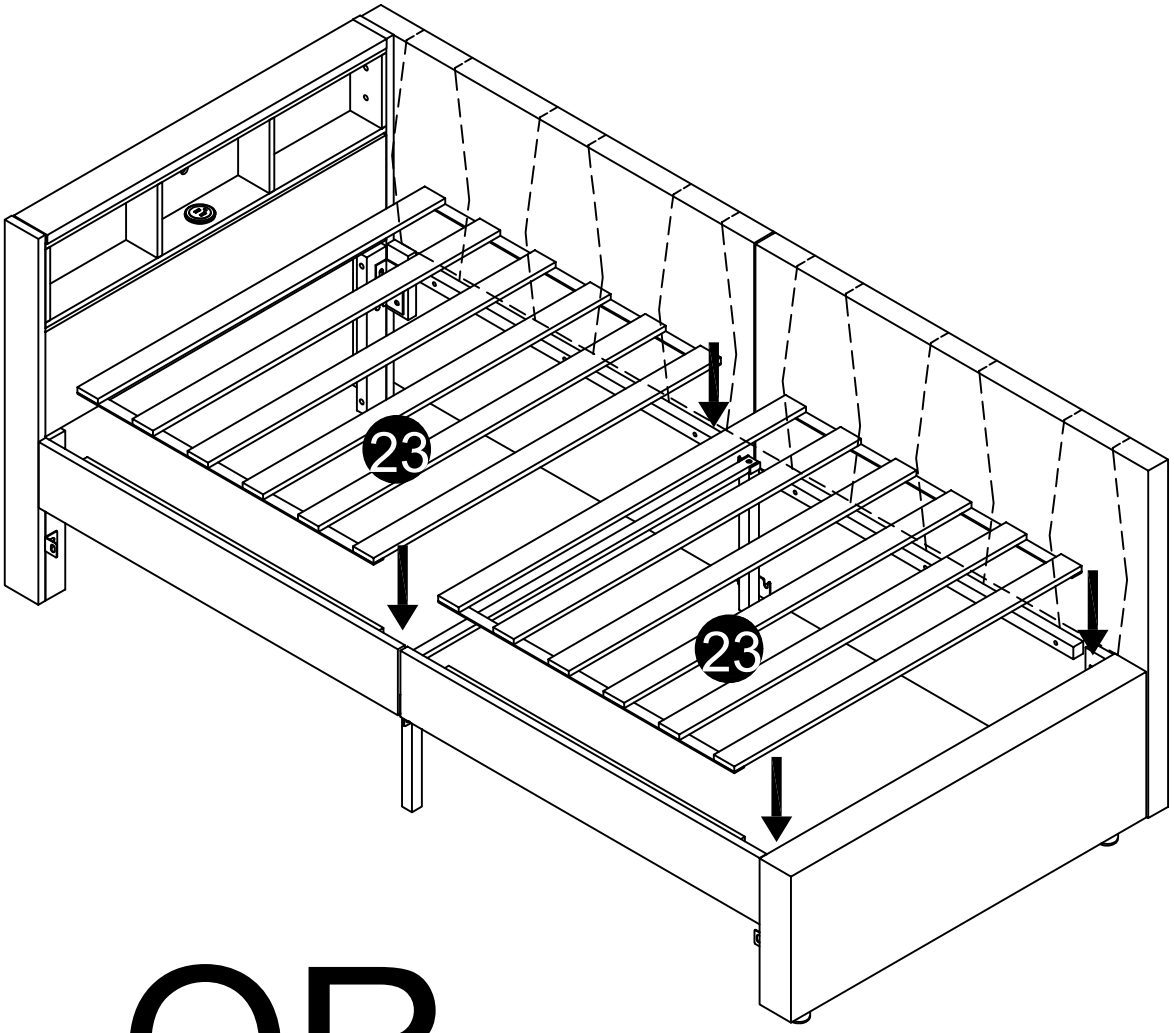

OR

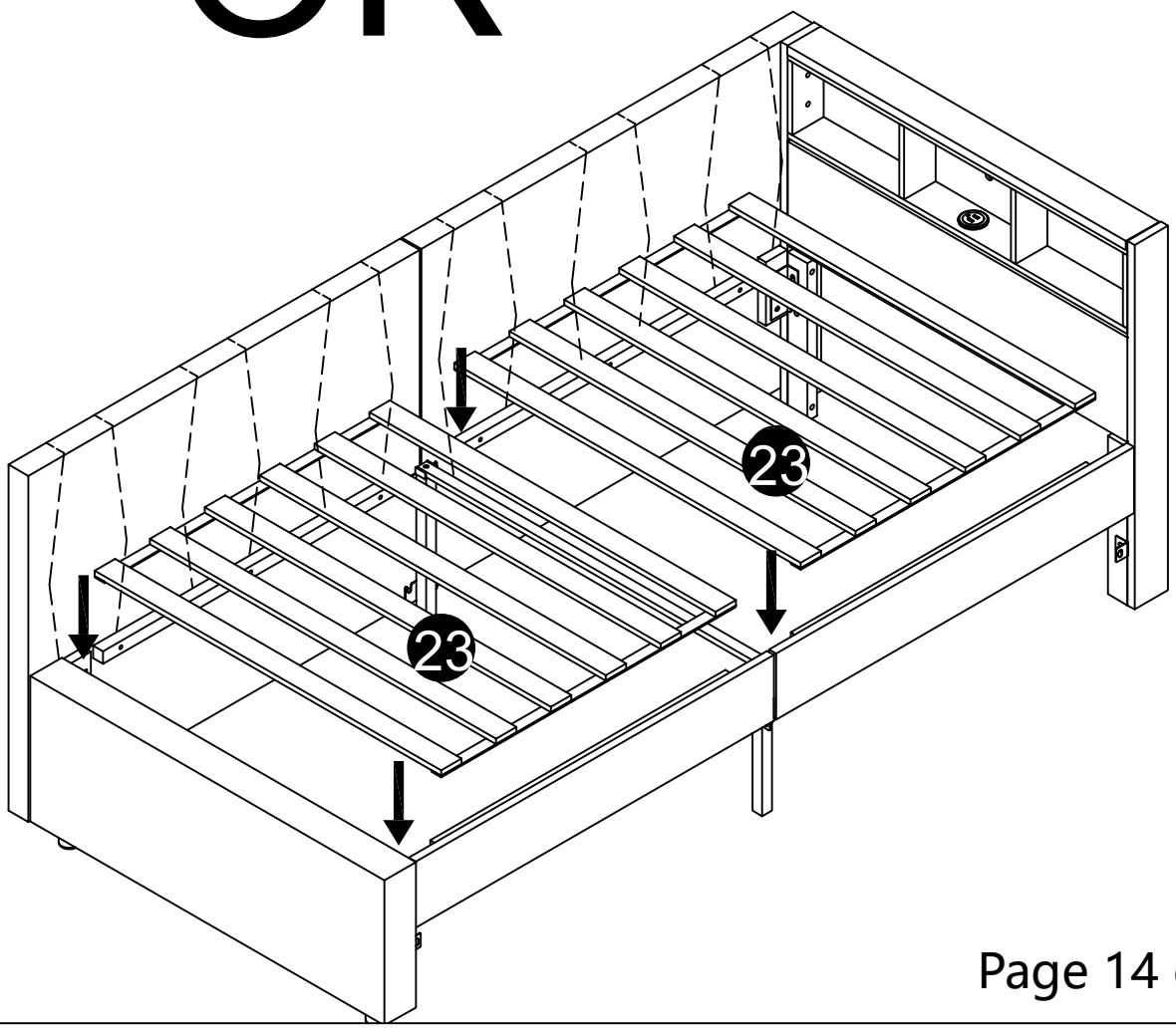

Step 12:

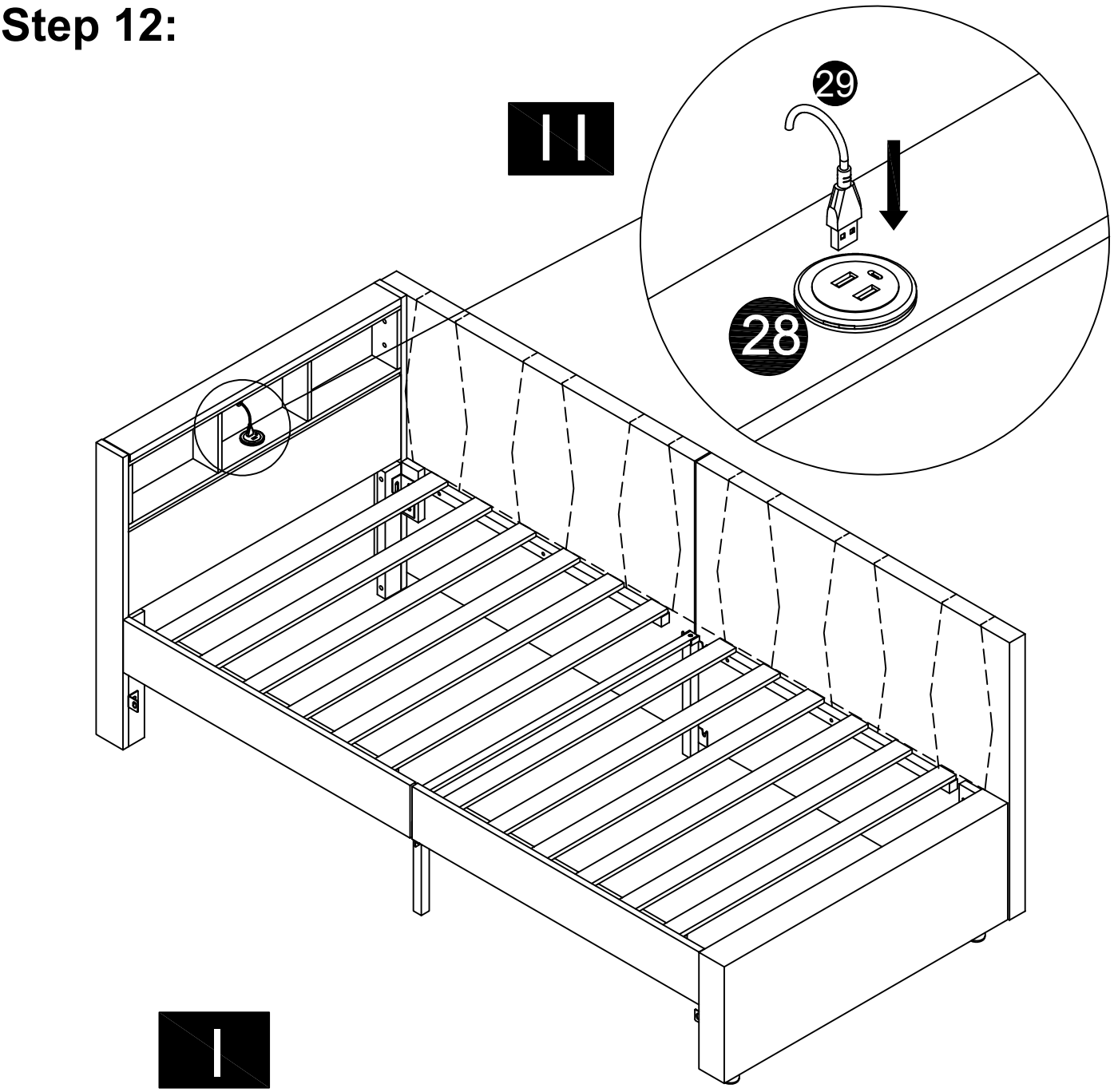

I

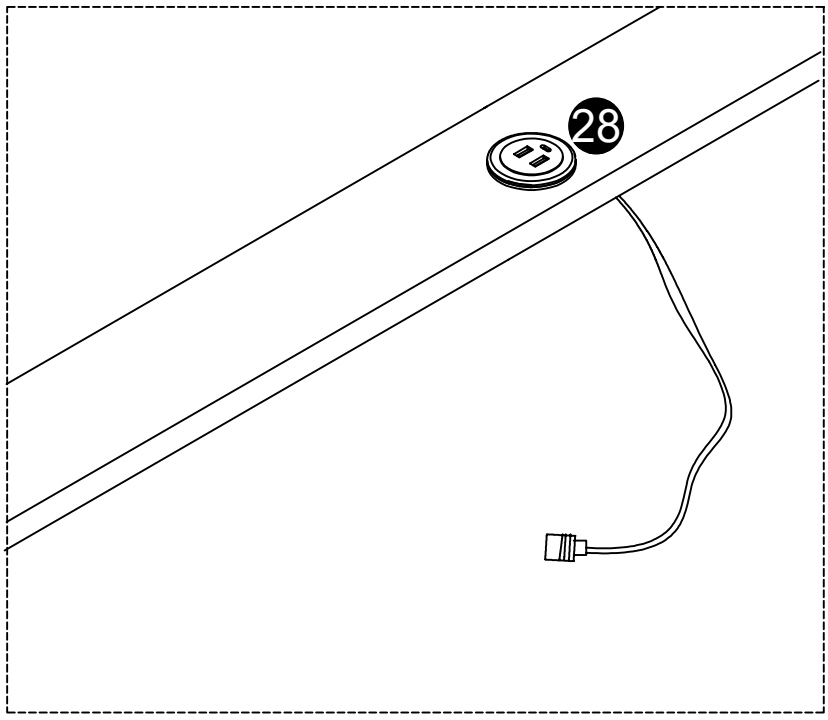

Step 13:

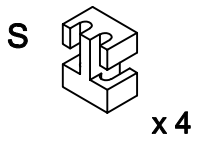

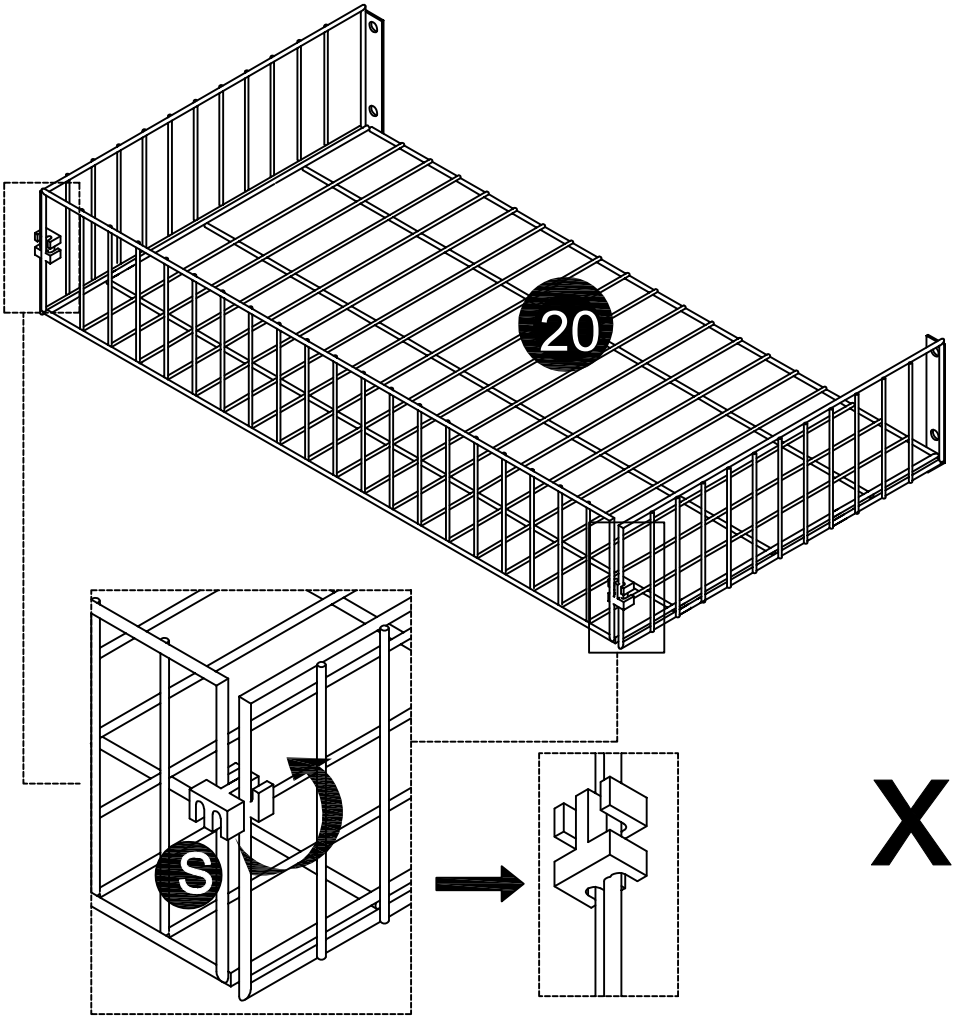

x2

Step 14:

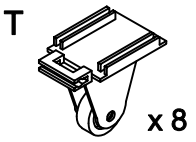

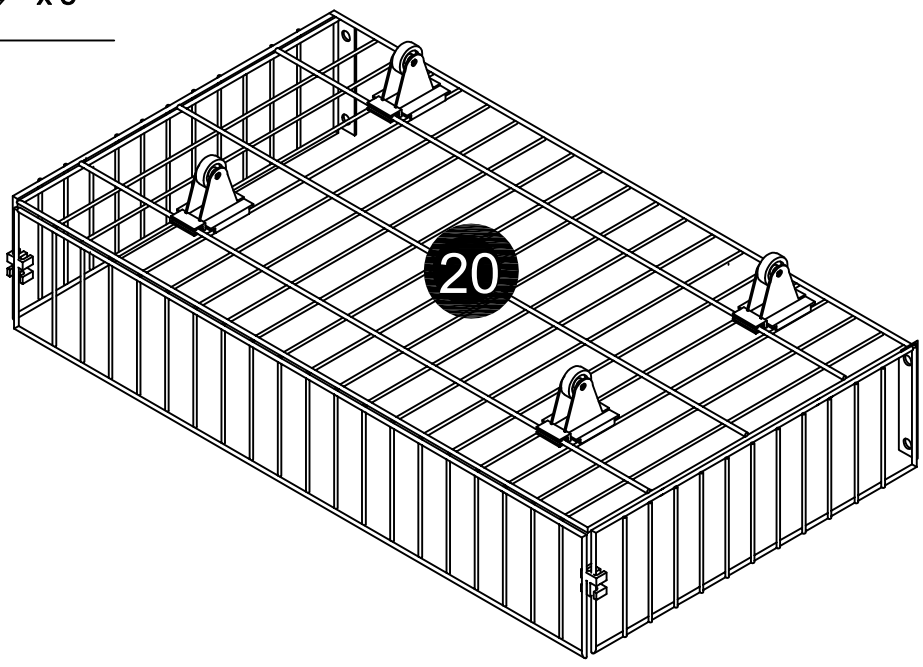

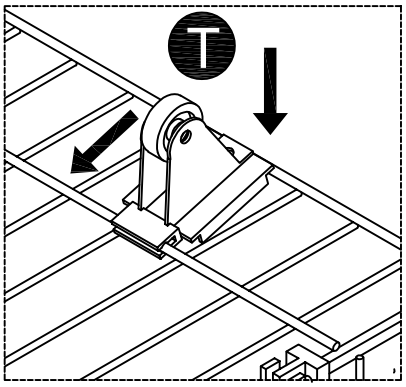

x2

Step 15:

H

x 8

K

x 1

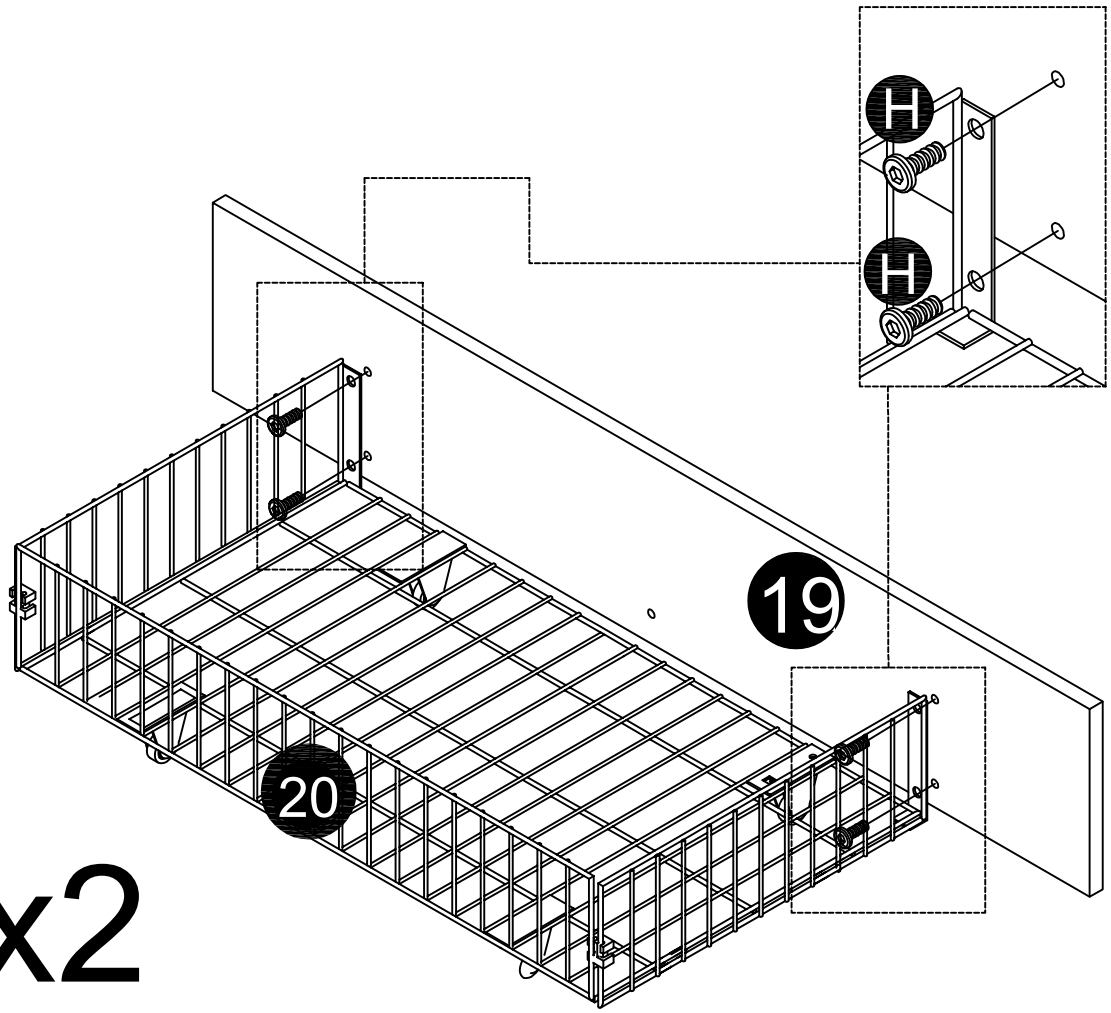

x2

Step 16:

H

x 2

K

x 1

U

x 2

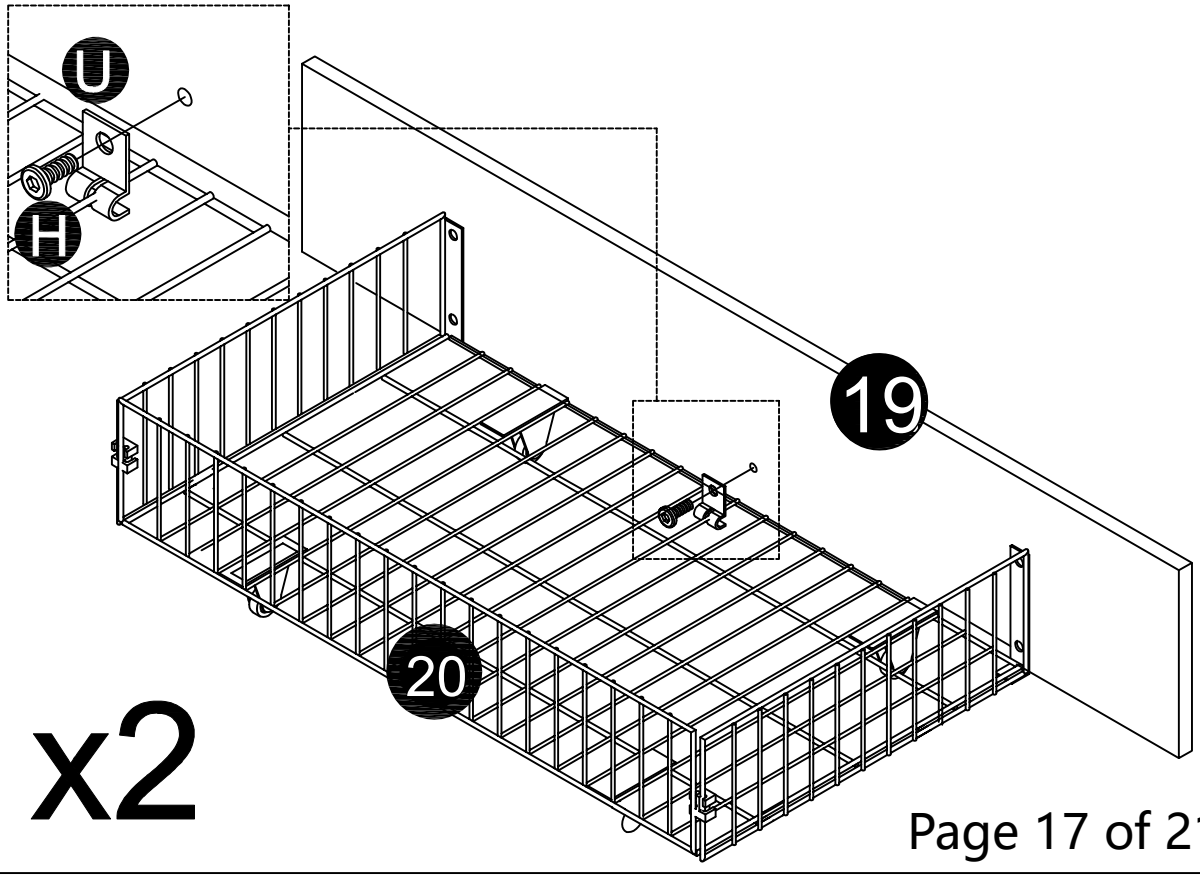

x2

Step 17:

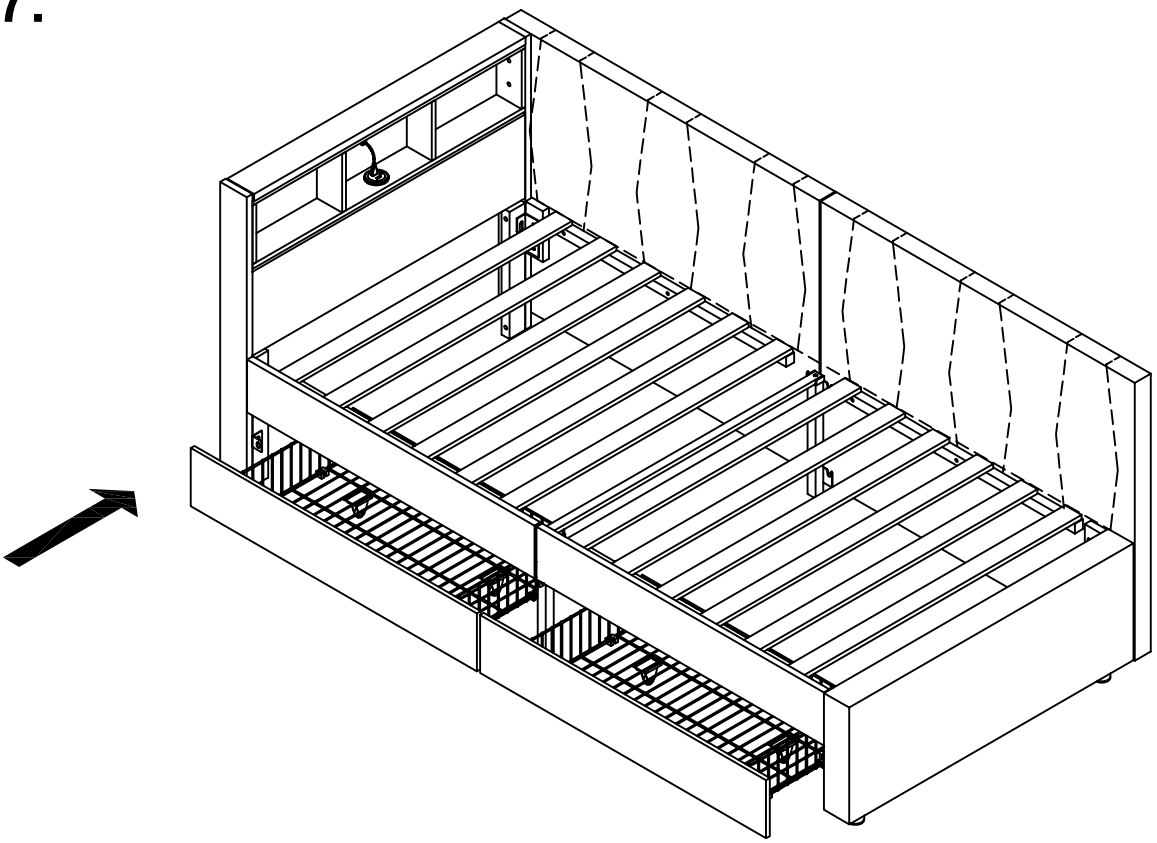

OR

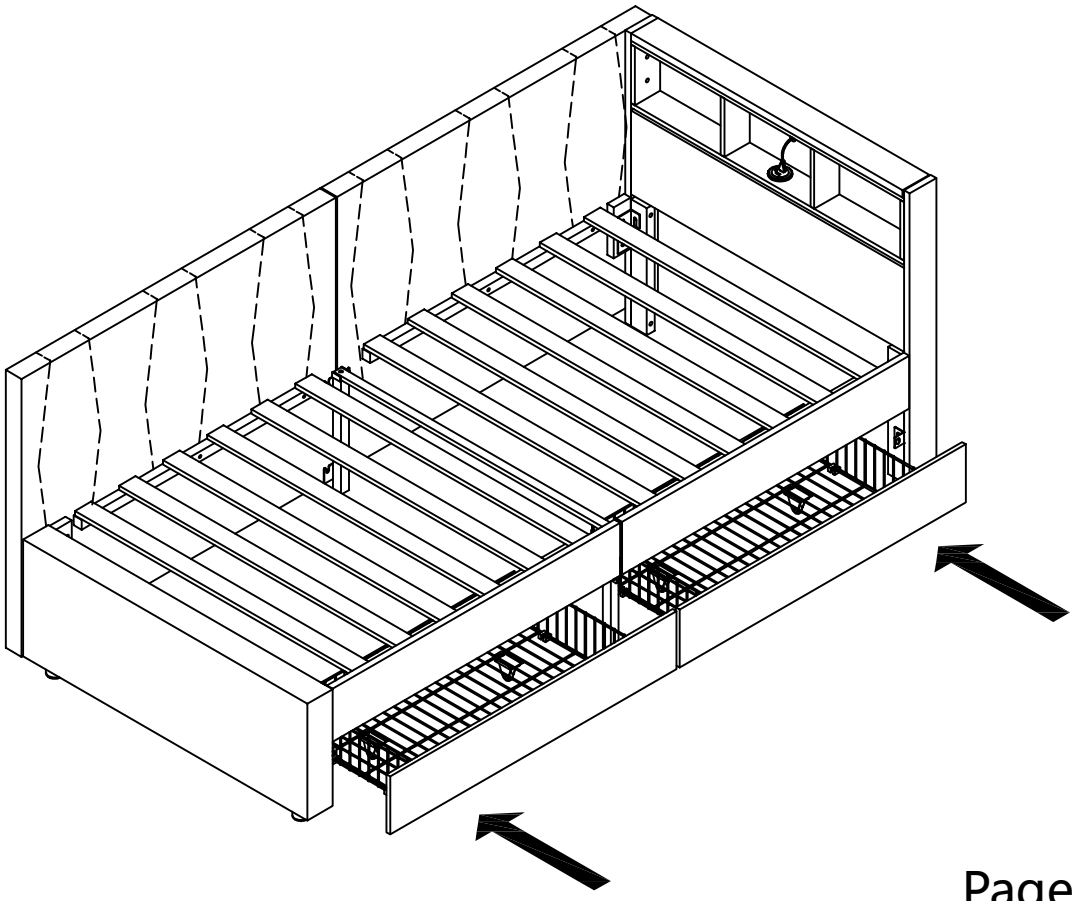

VERIFICATION OF CONFORMITY

Reference No.	:	**WTN23N07163435E**
Applicant	:	**Guangdong Zhangong Electrical Technology Co., LTD**
Address	:	**701, Building 29, Zhifu Garden, Xingtan Town, Shunde District, Foshan City**
Manufacturer	:	**Same as applicant**
Address	:	**Same as applicant**
Product	:	**Furniture Power Distrbution Units**
Model No.	:	**ZG-JJY-1UK to -8UK, others see attachment**
Technical data	:	**250 Vac, 50 - 60 Hz, 13 A, USB: 5 Vdc, 2 A**

Test Standards:

BS EN IEC 55015:2019+A11:2020
BS EN 61547:2009
BS EN IEC 61000-3-2:2019+A1:2021
BS EN 61000-3-3:2013+A1:2019+A2:2021

The above product has been tested by us with the listed standards and found in compliance with the Electromagnetic Compatibility Regulations 2016 of United Kingdom (S.I. 2016 No.1091). It is possible to use UKCA marking to demonstrate the compliance with the regulations.

BS EN IEC 55015: Limits and methods of measurement of radio disturbance characteristics of electrical lighting and similar equipment
BS EN 61547:Equipment for general lightingpurposes — EMC immunity requirements
BS EN IEC 61000-3-2:Electromagnetic compatibility (EMC)Part 3-2: Limits — Limits for harmonic current emissions (equipment input current ≤16 A per phase)
BS EN 61000-3-3:Electromagnetic compatibility (EMC)Part 3-3: Limits - Limitation of voltage changes, voltage fluctuations and flicker in public low-voltage supply systems, for equipment with rated current ≤ 16 A per phase and not subject to conditional connection

The referred test report(s) show that the product complies with standard(s) recognized as giving presumption of compliance with the essential requirements in the above mentioned UK regulations. Other relevant UK regulations have to be observed.

After preparation of the necessary technical documentation as well as the declaration of conformity, the UKCA marking as shown below can be affixed on the equipment under the sole responsibility of the manufacturer.

UKCA

Manager:Jianzhong Mao
Date:2023-09-05

The statement is based on a single evaluation of the sample of above mentioned product. It does not imply an assessment of the whole production.

Waltek Testing Group (Ningbo) Co., Ltd.

Hotline: 400-840-2288 E-mail: nb@waltek.com.cn
Http://www.waltek.com.cn

Ver.10.22, WALTEK is registered trademark. Utilisation and application requires prior approval.

VERIFICATION OF CONFORMITY

Attachment

Model list

Reference No.: WTN23N07163435E

No.	Model	Rated Input	Max Current	Max Output	Note
1.	ZG-JJY-1	250 Vac, 50 - 60 Hz	13 A	USB: 5 Vdc, 2 A	/
2.	ZG-JJY-1UK	250 Vac, 50 - 60 Hz	13 A	USB: 5 Vdc, 2 A	/
3.	ZG-JJY-2	250 Vac, 50 - 60 Hz	13 A	USB: 5 Vdc, 2 A	/
4.	ZG-JJY-2UK	250 Vac, 50 - 60 Hz	13 A	USB: 5 Vdc, 2 A	/
5.	ZG-JJY-3	250 Vac, 50 - 60 Hz	13 A	USB: 5 Vdc, 2 A	/
6.	ZG-JJY-3UK	250 Vac, 50 - 60 Hz	13 A	USB: 5 Vdc, 2 A	/
7.	ZG-JJY-4	250 Vac, 50 - 60 Hz	13 A	USB: 5 Vdc, 2 A	/
8.	ZG-JJY-4UK	250 Vac, 50 - 60 Hz	13 A	USB: 5 Vdc, 2 A	/
9.	ZG-JJY-5	250 Vac, 50 - 60 Hz	13 A	USB: 5 Vdc, 2 A	/
10.	ZG-JJY-5UK	250 Vac, 50 - 60 Hz	13 A	USB: 5 Vdc, 2 A	/
11.	ZG-JJY-6	250 Vac, 50 - 60 Hz	13 A	USB: 5 Vdc, 2 A	/
12.	ZG-JJY-6UK	250 Vac, 50 - 60 Hz	13 A	USB: 5 Vdc, 2 A	/
13.	ZG-JJY-7	250 Vac, 50 - 60 Hz	13 A	USB: 5 Vdc, 2 A	/
14.	ZG-JJY-7UK	250 Vac, 50 - 60 Hz	13 A	USB: 5 Vdc, 2 A	/
15.	ZG-JJY-8	250 Vac, 50 - 60 Hz	13 A	USB: 5 Vdc, 2 A	/
16.	ZG-JJY-8UK	250 Vac, 50 - 60 Hz	13 A	USB: 5 Vdc, 2 A	/

Verification of compliance Verification of compliance Verification of compliance Verification of compliance

Verification of Compliance

Verification No.:	MK25070091P01-E01
Name and address of Applicant:	**Shenzhen CWG Technology Co., Ltd** 3/F, Building A, Yongshenghui Industrial Park, Chuangye Road, Shiyan Street, Bao'an District, Shenzhen
Name and address of Manufacturer	**Shenzhen CWG Technology Co., Ltd** 3/F, Building A, Yongshenghui Industrial Park, Chuangye Road, Shiyan Street, Bao'an District, Shenzhen
Product name:	**LED Strip**
Rated:	5V ⎓
Product model(s):	CWG-5050RGB-60D-5V, CWG-5050RGB-30D-12V, CWG-5050RGB-18D-12V, CWG-5050RGB-60D-24V, CWG-5050RGB-60D-12V, CWG-5050RGB-30D-5V, CWG-5050RGB-18D-5V, CWG-5050-60D-12V, CWG-5050-30D-12V, CWG-5050-60D-24V, CWG-HC5050RGB-60D-12V, CWG-HC5050RGB-30D-12V,CWG-HC5050RGB-60D-24V, CWG-HC5050-60D-12V, CWG-HC5050-30D-12V, CWG-HC5050-60D-24V, CWG-HC5050RGB-30D-5V, CWG-HC5050RGB-60D-5V, CWG-HC5050RGB-144D-5V, CWG-2835-60D-12V, CWG-2835-120D-12V, CWG-2835-60D-24V, CWG-2835-120D-24V, CWG-2835-60D-5V, CWG-2835-120D-5V
Product trademark:	创唯光

This verification confirms that the product meets the requirements of the following standard.
The conformity was demonstrated based on following standard(s) listed by European Commission as harmonized with EMC Directive 2014/30/EU.

EN IEC 55015:2019+A11:2020
EN IEC 61547:2023

The verification has been carried out in accordance with individual rules and conditions agreed with the applicant. Evaluation has been carried out in accordance with:

Test report(s) No.:	MK25070091P01-E01
Test conducted by:	TMC Testing Services (Shenzhen) Co., Ltd.
Verification issue date:	July 17, 2025

Notes:
This verification refers to the above mentioned product and its conformity in regards of above mentioned standard(s) was proven on test sample.
This verification does not imply meeting all essential requirements, assessment of the series-production or any other restricted Notified Bodies conformity assessment procedure appropriate for the product.
This verification holder shall use this verification in connection to verification of conformity and technical data relevant for the product the verification was issued.

TMC Testing Services (Shenzhen) Co., Ltd.
t:86-755-86642861 cert@tmc-lab.com www.tmc-lab.com
1st Floor, Block A1, Zone A, Xinshidai Gongrong Industrial Park, No. 2, Shihuan Road, Shiyan Street, Baoan District, Shenzhen, China

Bauart geprüft TMC Product Safety

Lab Manager:
Vivian Jiang

ASSEMBLY INSTRUCTION

N652P537428B、29B/N652P537428G、29G

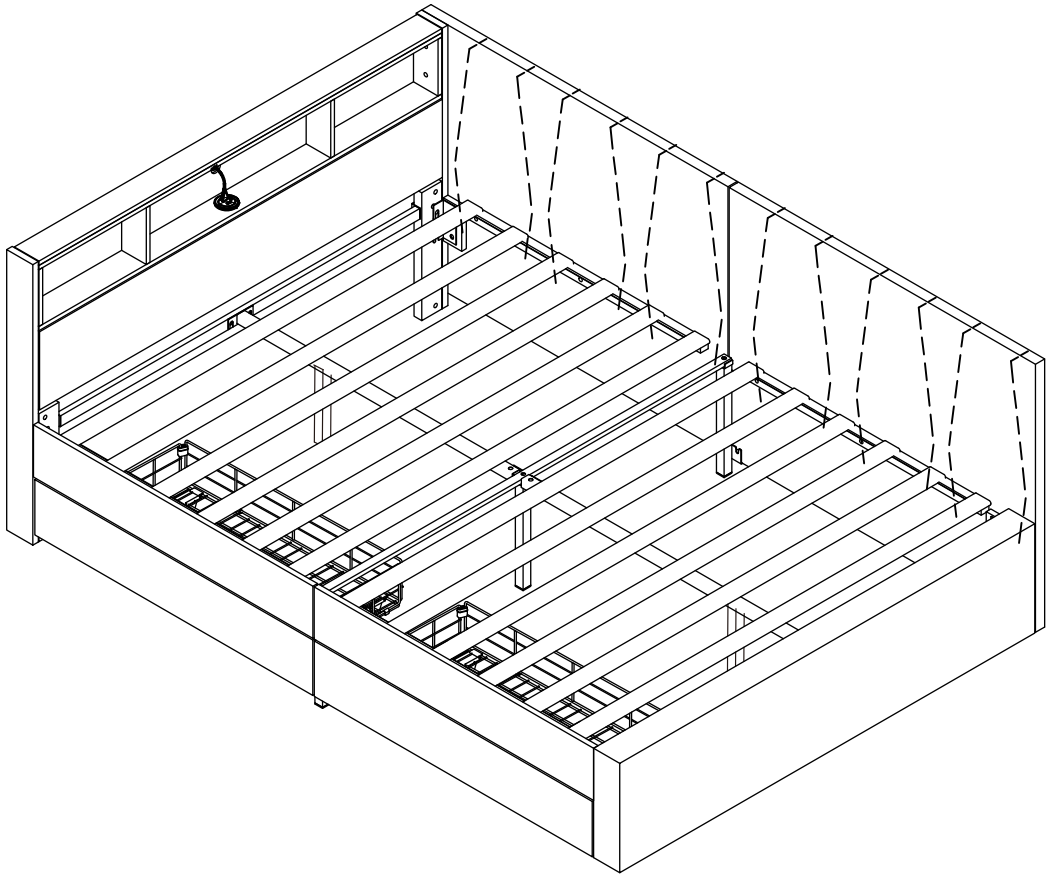

TIPS

1.This product is divided into 2 parcels for delivery. They may not arrive at the same time.Please wait patiently.

2.Please read the instructions fully before assembly. These instructions include important information which could ensure correct assembly. We have been working on providing high quality products for you. However, in the rare instance that your product is defective,missing parts or there are some issues, please don't hesitate to contact our customer service to submit parts requirements, assembly suggestion,or warranty claims, and we will give the best solution as soon as possible. If necessary, we need you to provide some more clear pictures of the issue.

3.Insert the screws in holes and tighten the screws, but not too tight, 70%~80% is ok, finally tighten all the screws. If some issues happened that some screws can not target to the hole or some parts are difficult to install, please adjust the tightness of the screws.

4.2 people are recommended to finish.

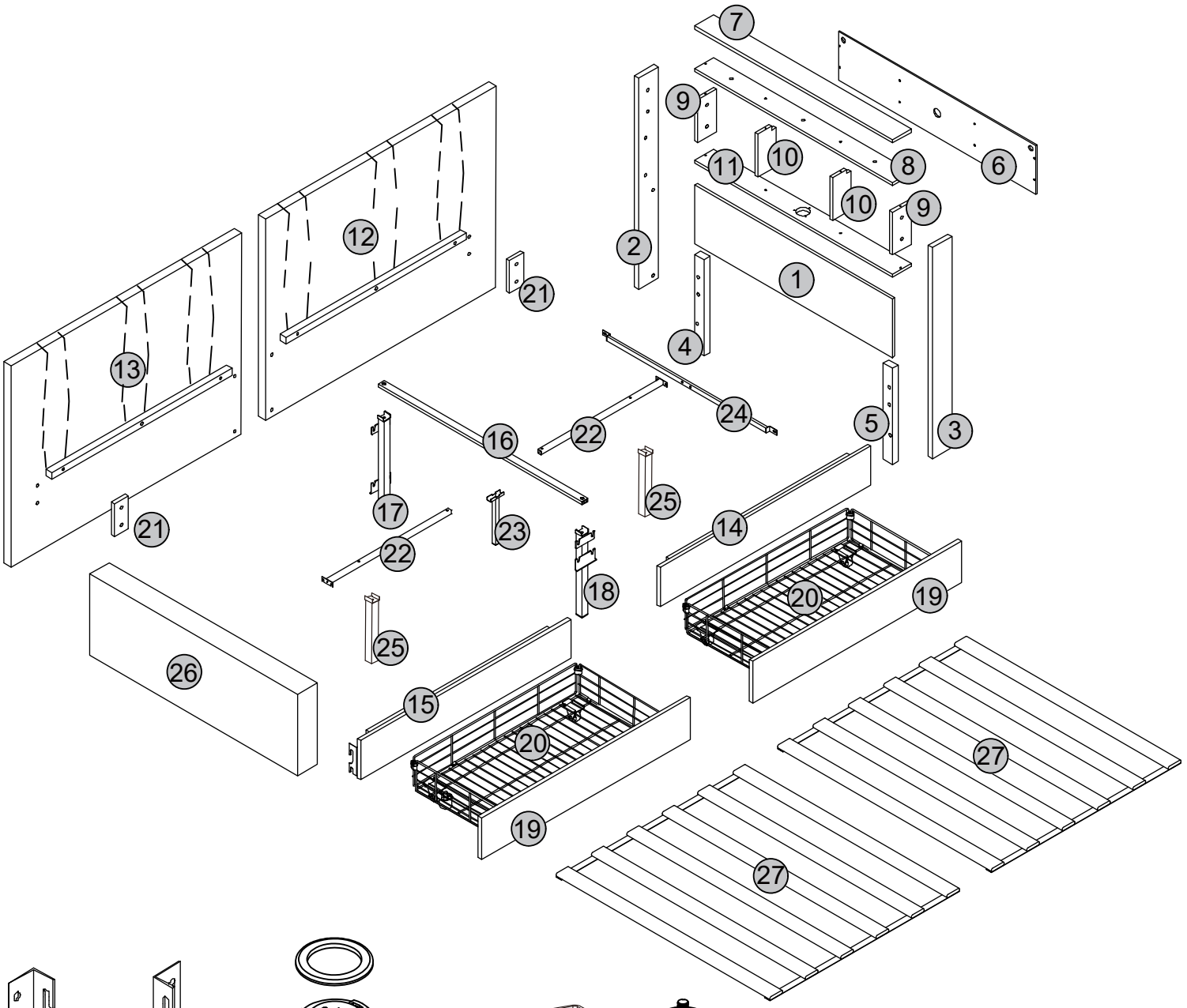
7
9
11
10
8
6
10
9
2
1
12
21
4
13
24
16
22
5
3
17
25
23
14
21
22
18
20
19
25
26
15
20
27
19
27

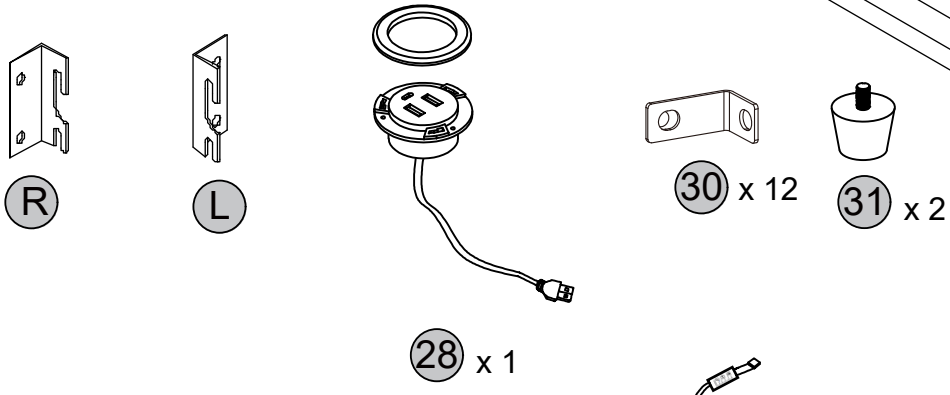
R
L
30 x 12
31 x 2
28 x 1

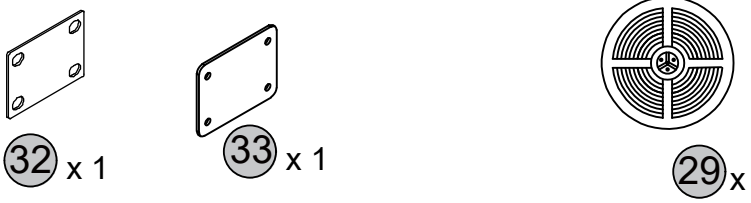
32 x 1
33 x 1
29 x 1

Part list

N652P537428B/N652P537428G

1 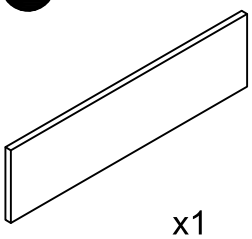 x1	2 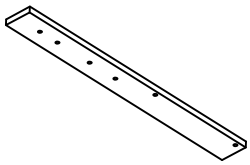 x1	3 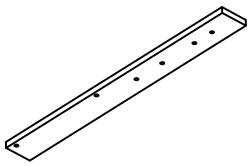 x1	6 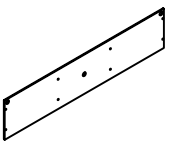 x1	7 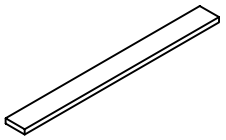 x1
8 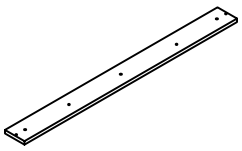 x1	9 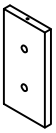 x2	10  x2	11 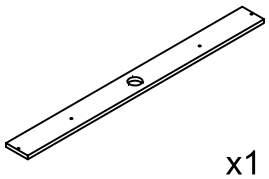 x1	16  x1	24 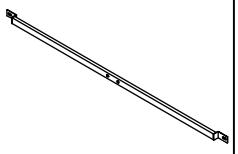 x1
26 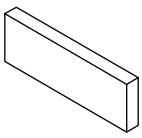 x1	27 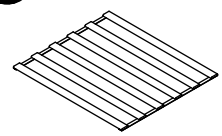 x1	21 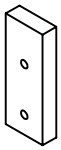 x2			

Part list

N652P537429B/N652P537429G

4  x1	5  x1	12 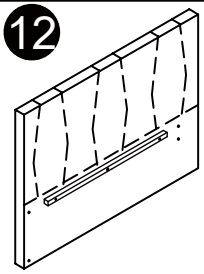 x1	13 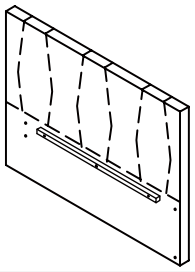 x1	14 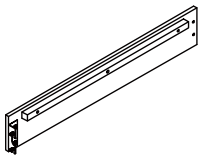 x1
15 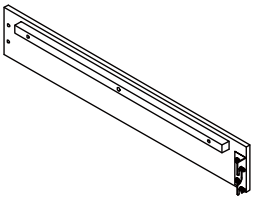 x1	17 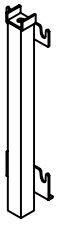 x1	18 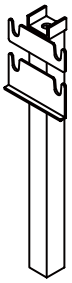 x1	19 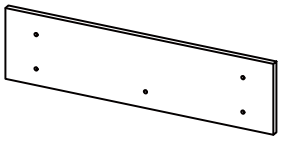 x2	20 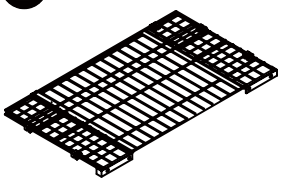 x2
22 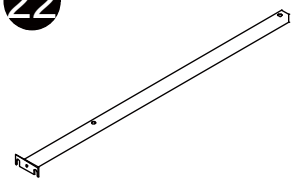 x2	23 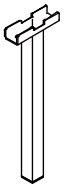 x1	25  x2	28 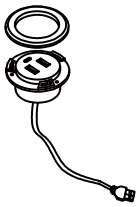 x 1	29  x 1
30 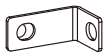 x14	31  x 2	32 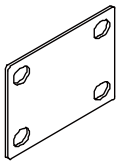 x 1	33 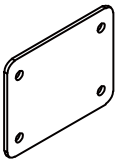 x 1	T 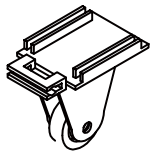 x 8
S  x 4	U 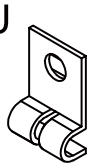 x2	R 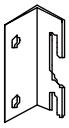 x 1	L  x 1	

Hardware list

N652P537429B/N652P537429G

A	B	C	D	E	F	G	H	J	K	N	O			
M8x25 x7	M8x10 x4	**M8x45** x9	M8x15 x44	M8x20 x4	M8x30 x2	M5x30 **x 16**	M6x10 x10	M8 x 1	M6 x 1	3.5x12 x7	**x 1**			

Step 1:



x 8

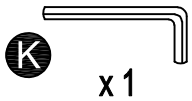

x 1

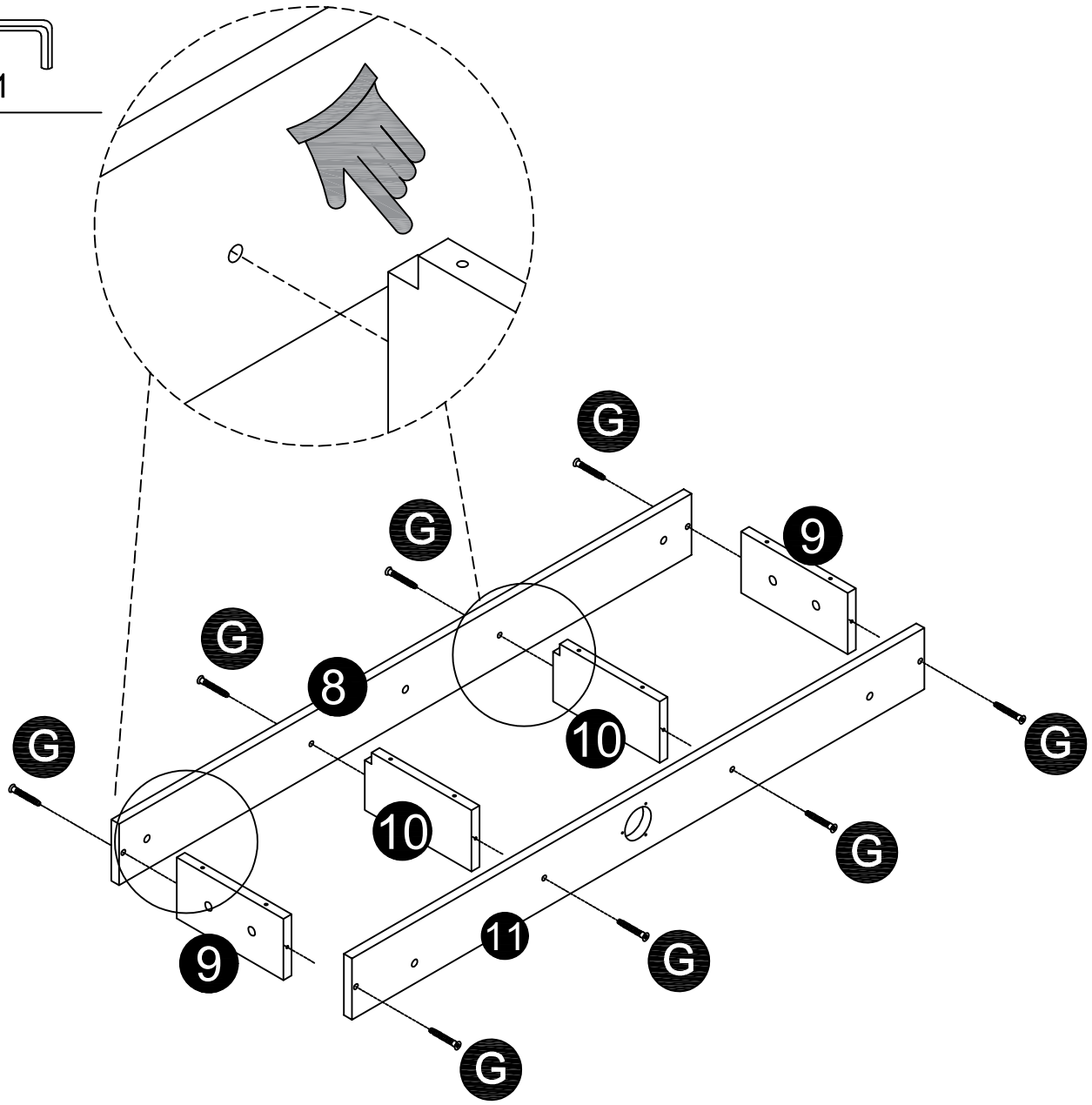

Step 2:

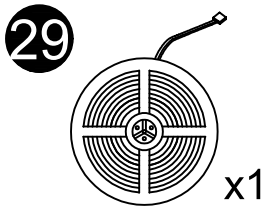

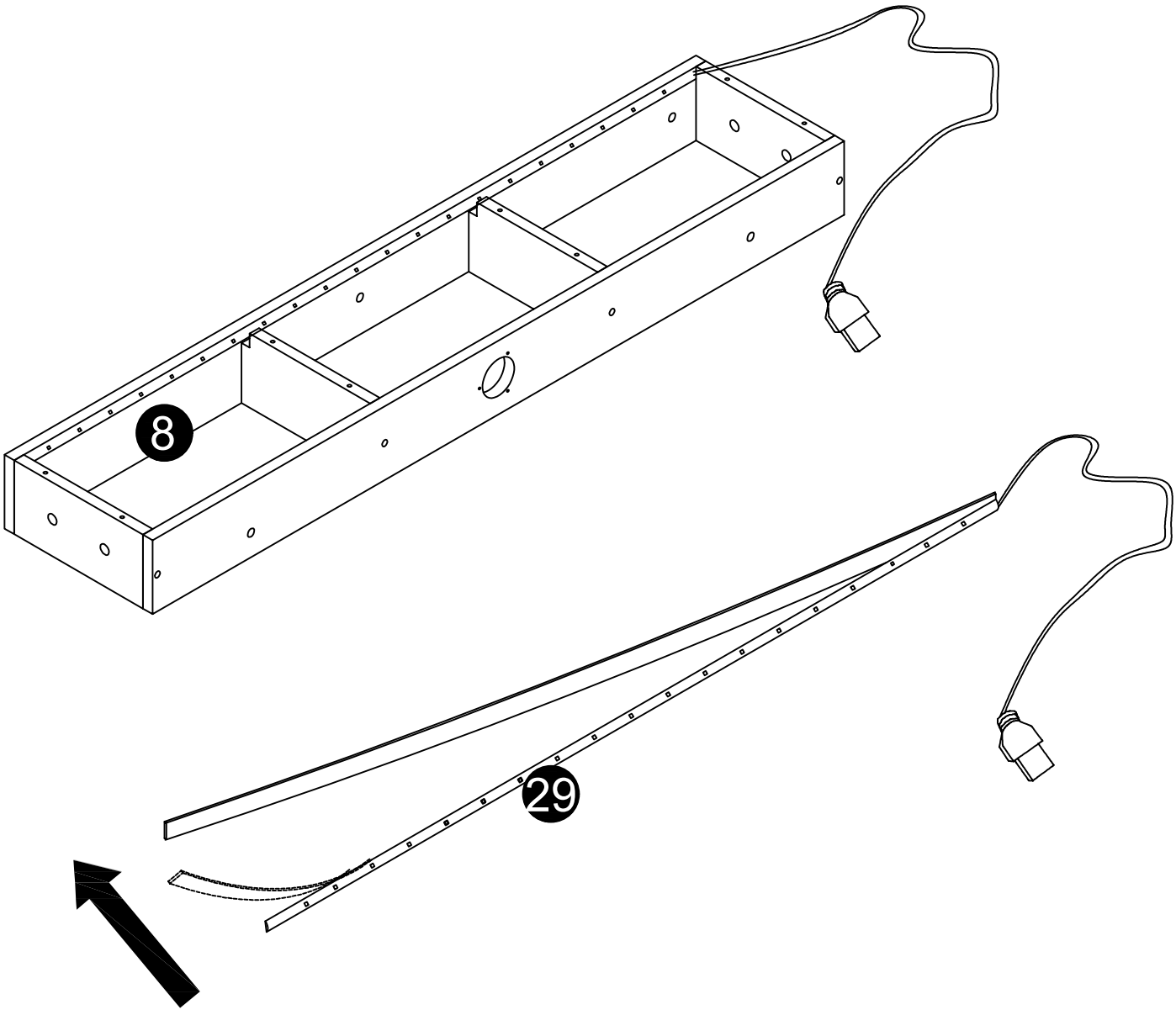

Step 3:

G

x 8

K

x 1

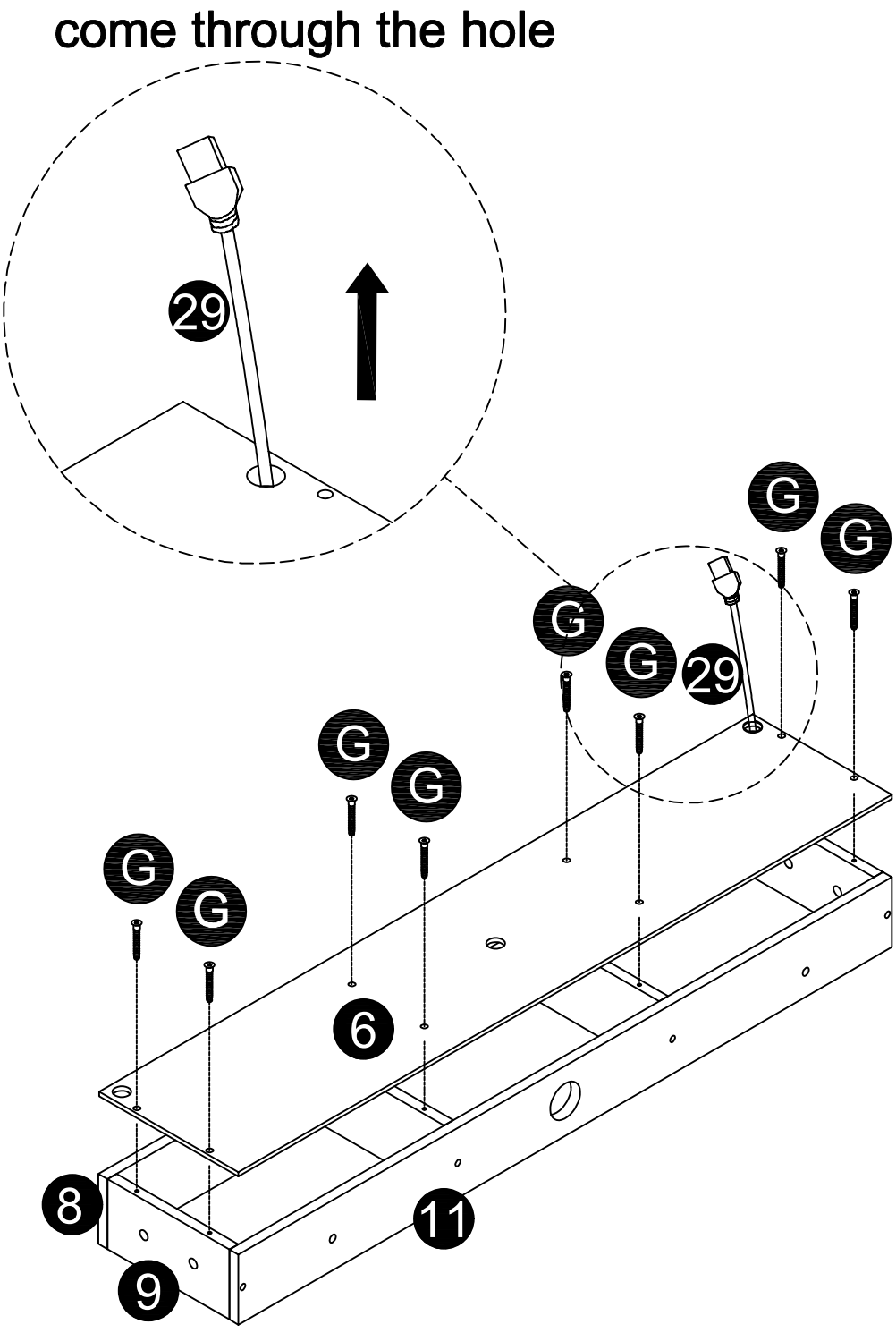

Step 4:

A x 7

J x 1

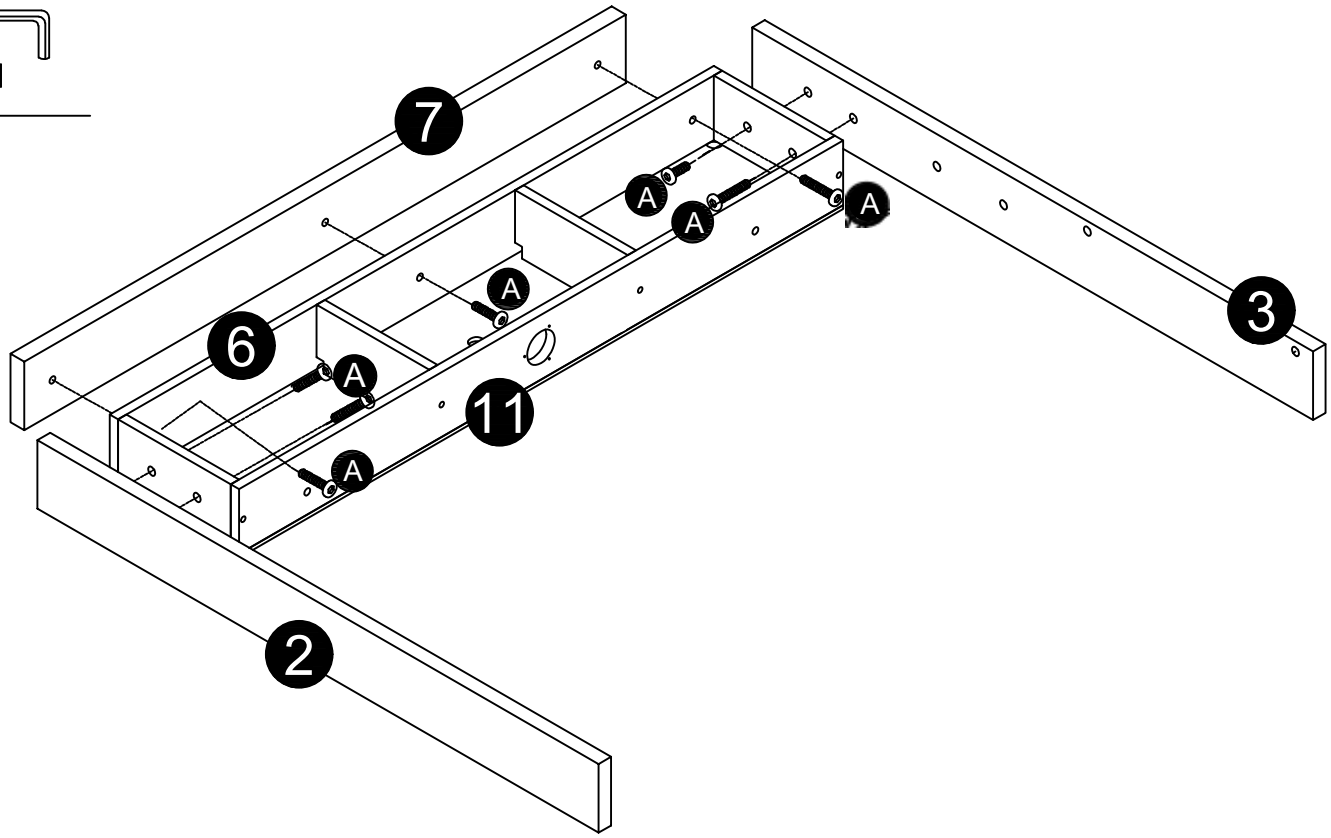

Step5:

B x4

D x22

K x 1

J x 1

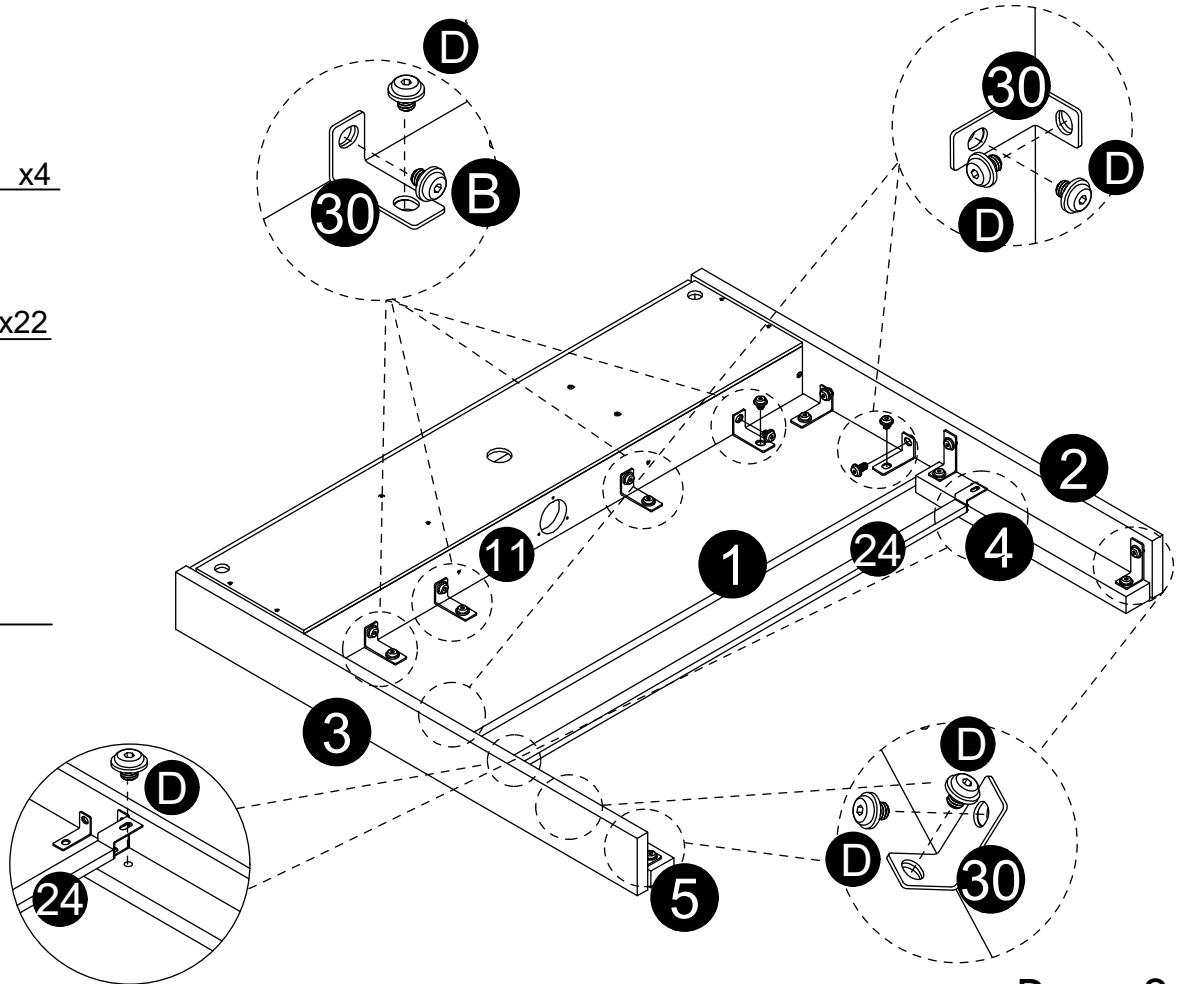

Step 6:

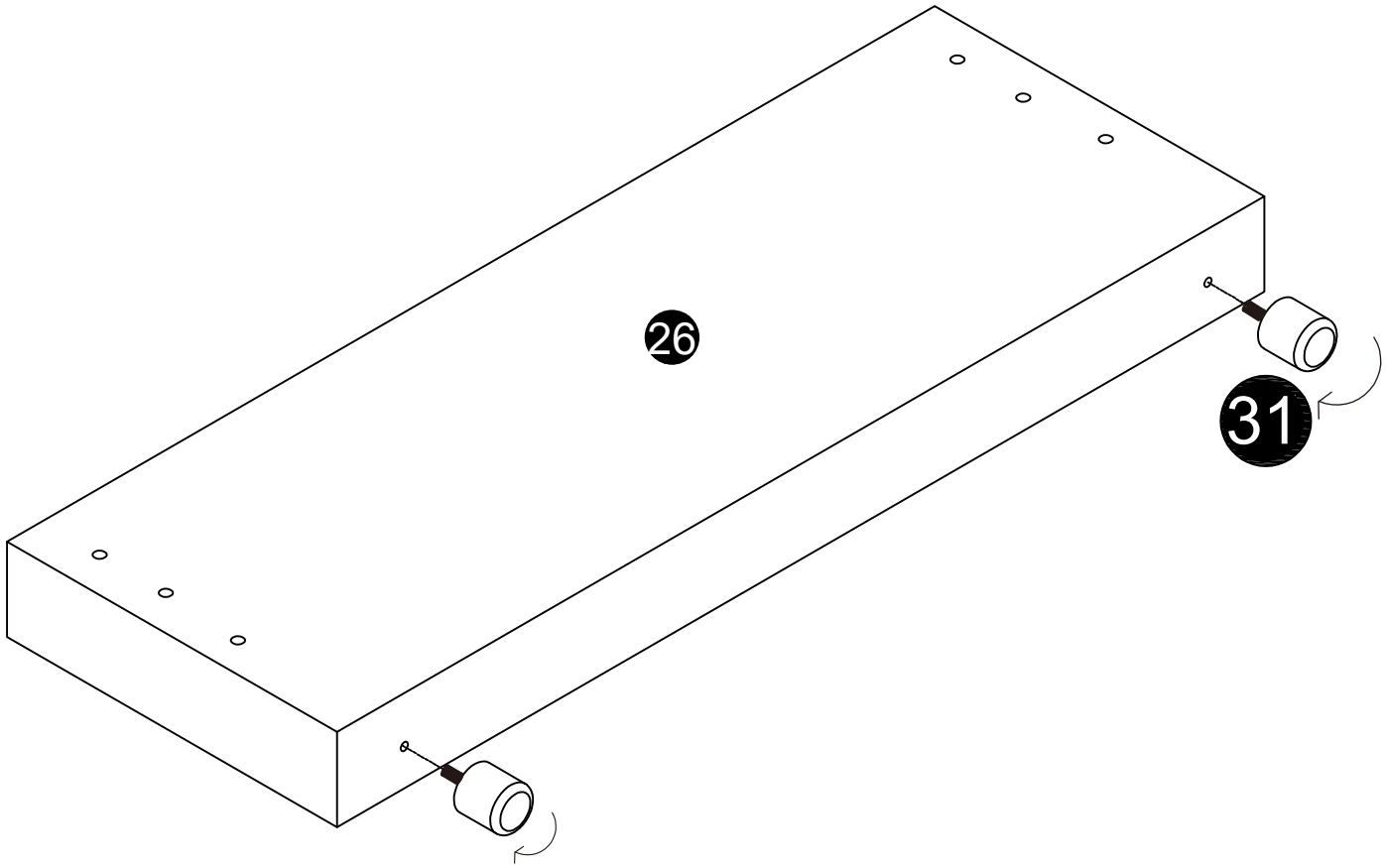

Step 7:

D x4

E x4

C x 4

J x 1

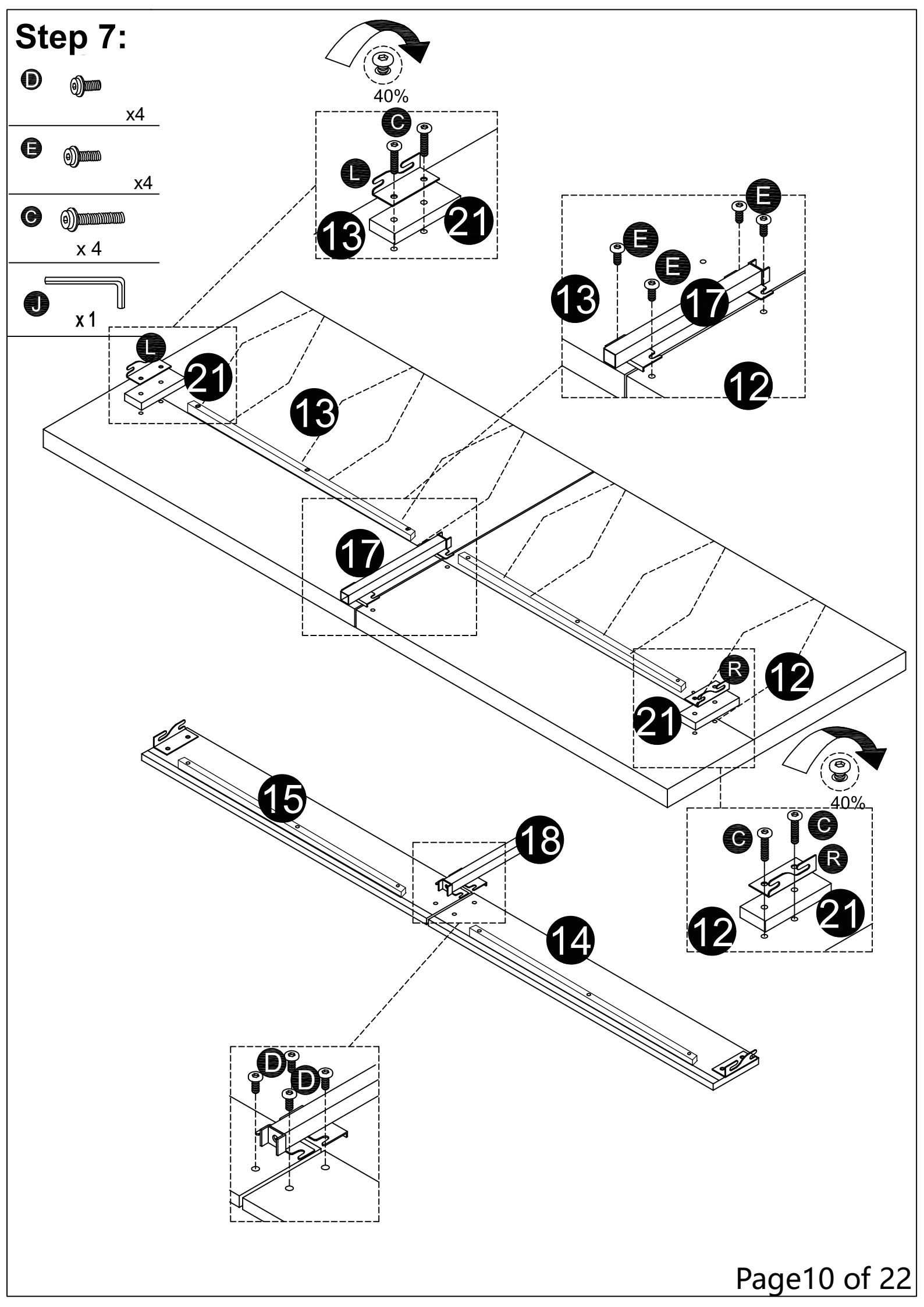

Step 8:

D x 8

J x 1

N x 3

K x 1

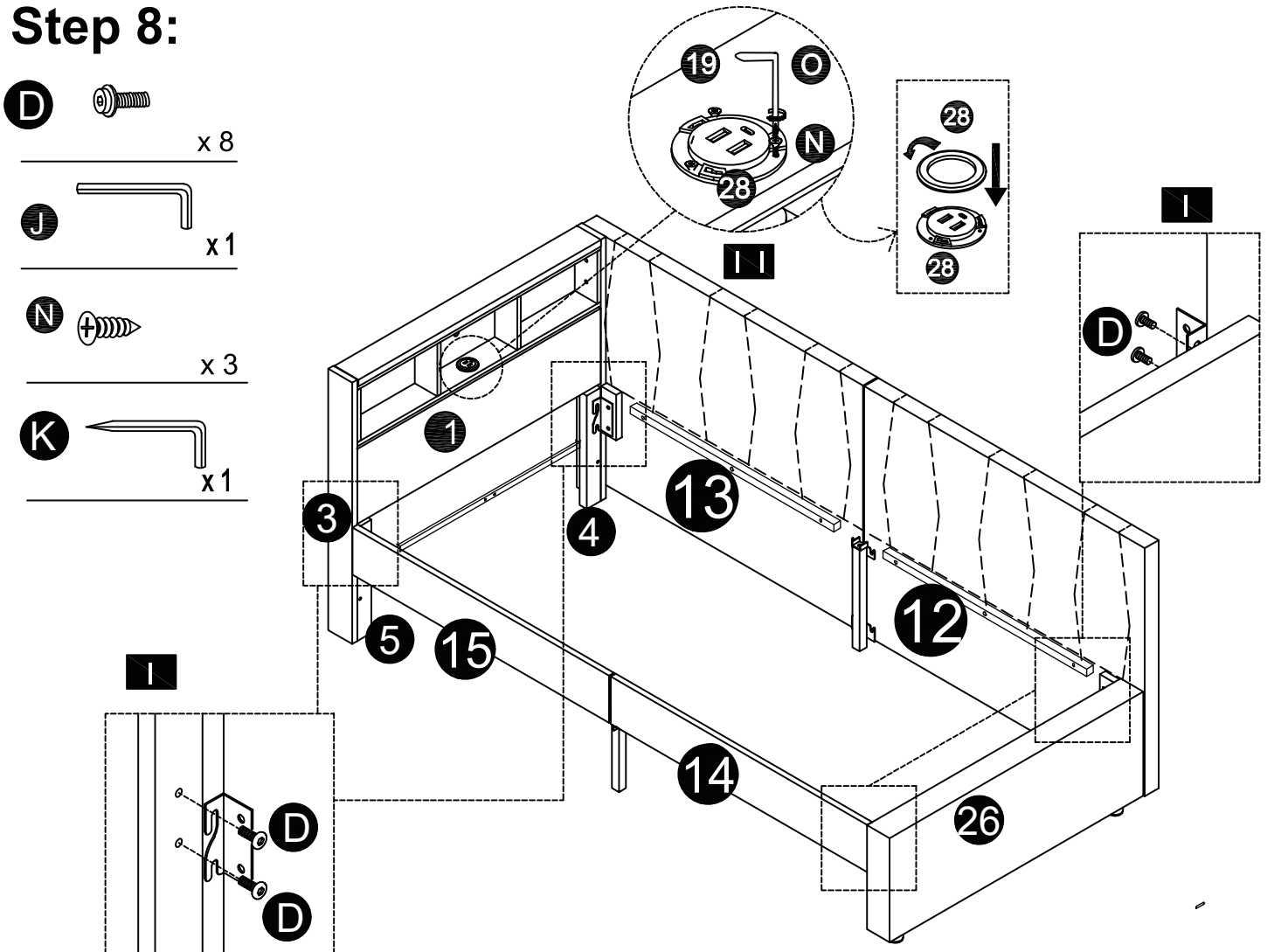

OR

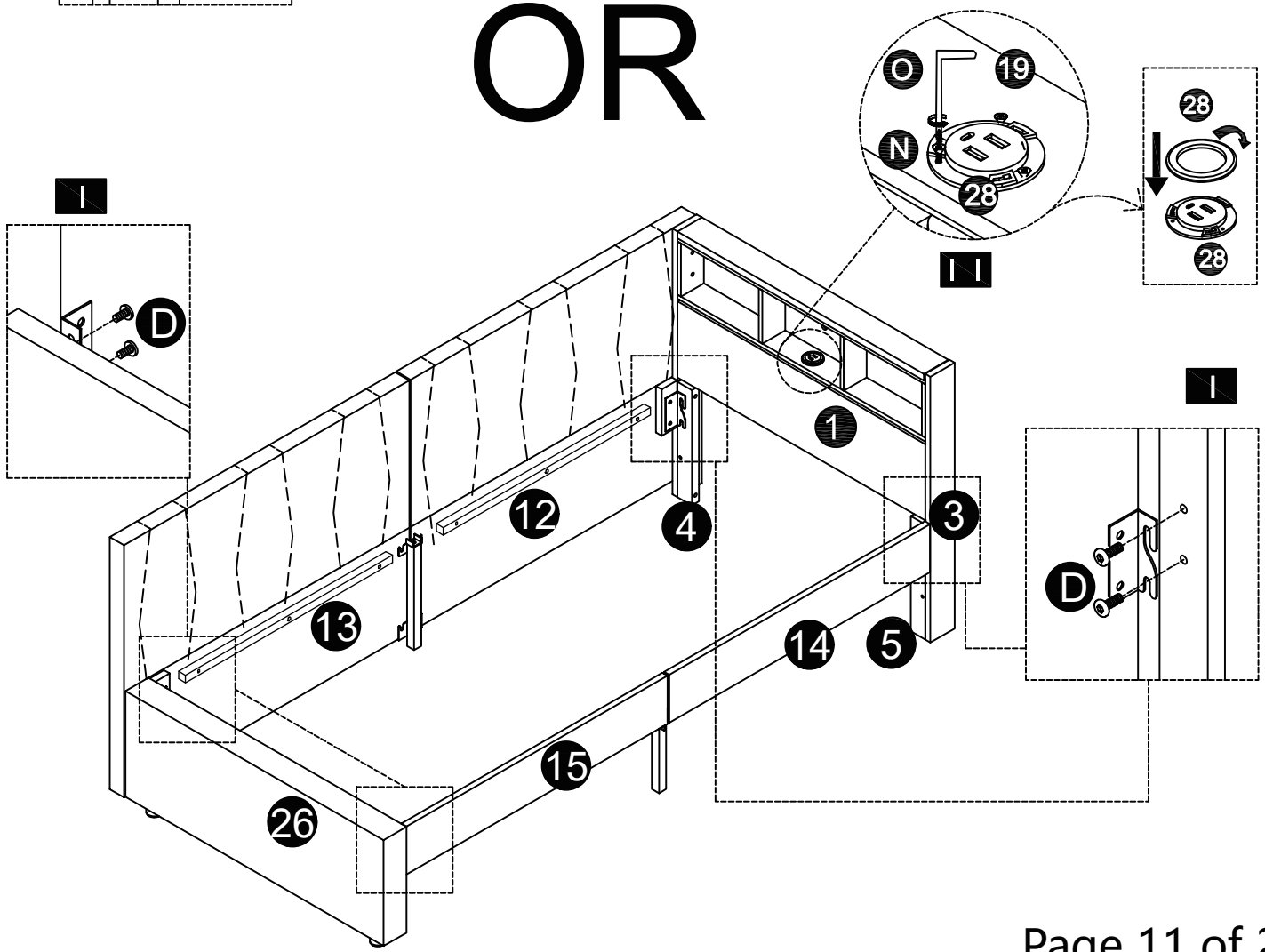

Step 9:

F x2

D x2

J x1

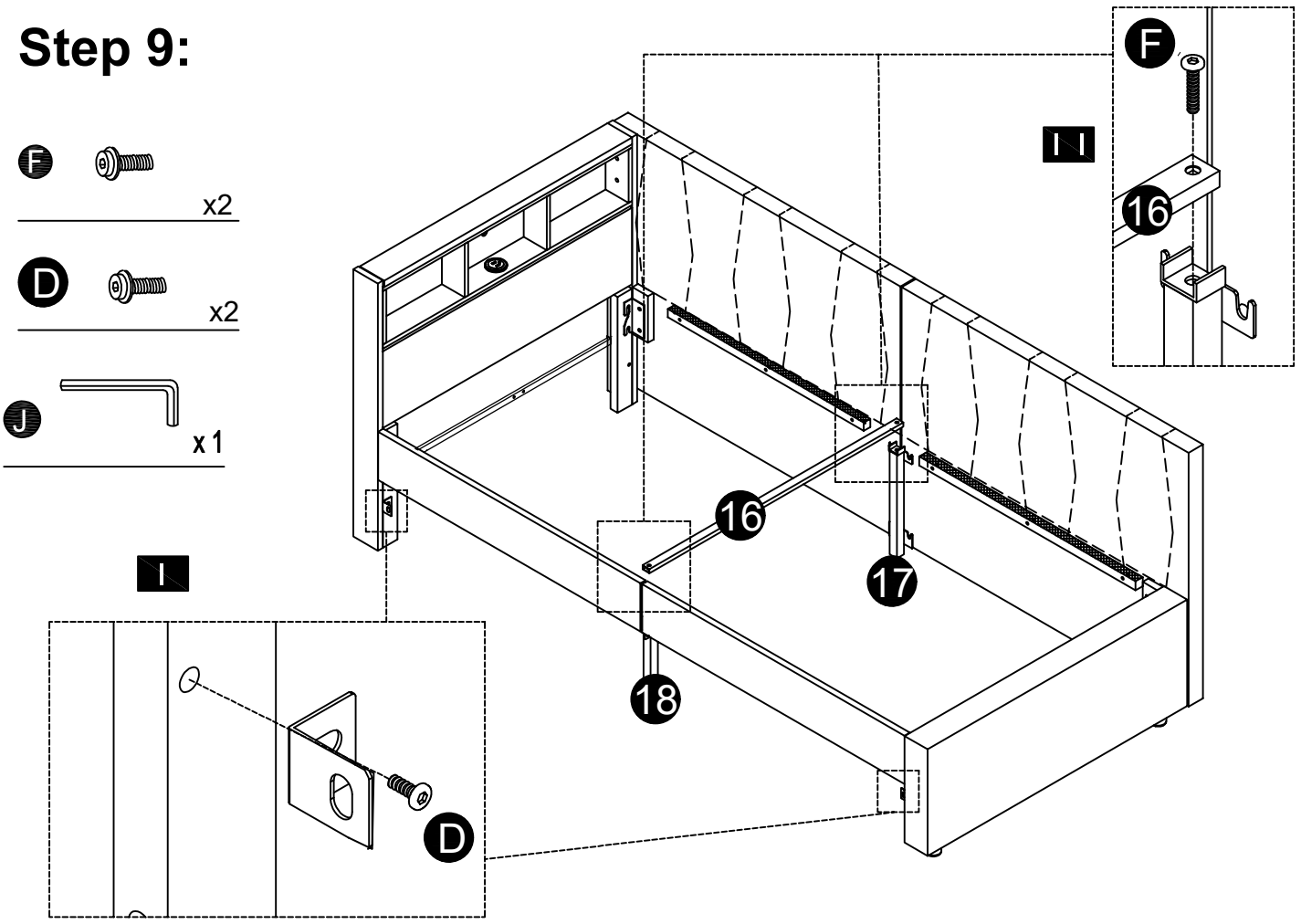

OR

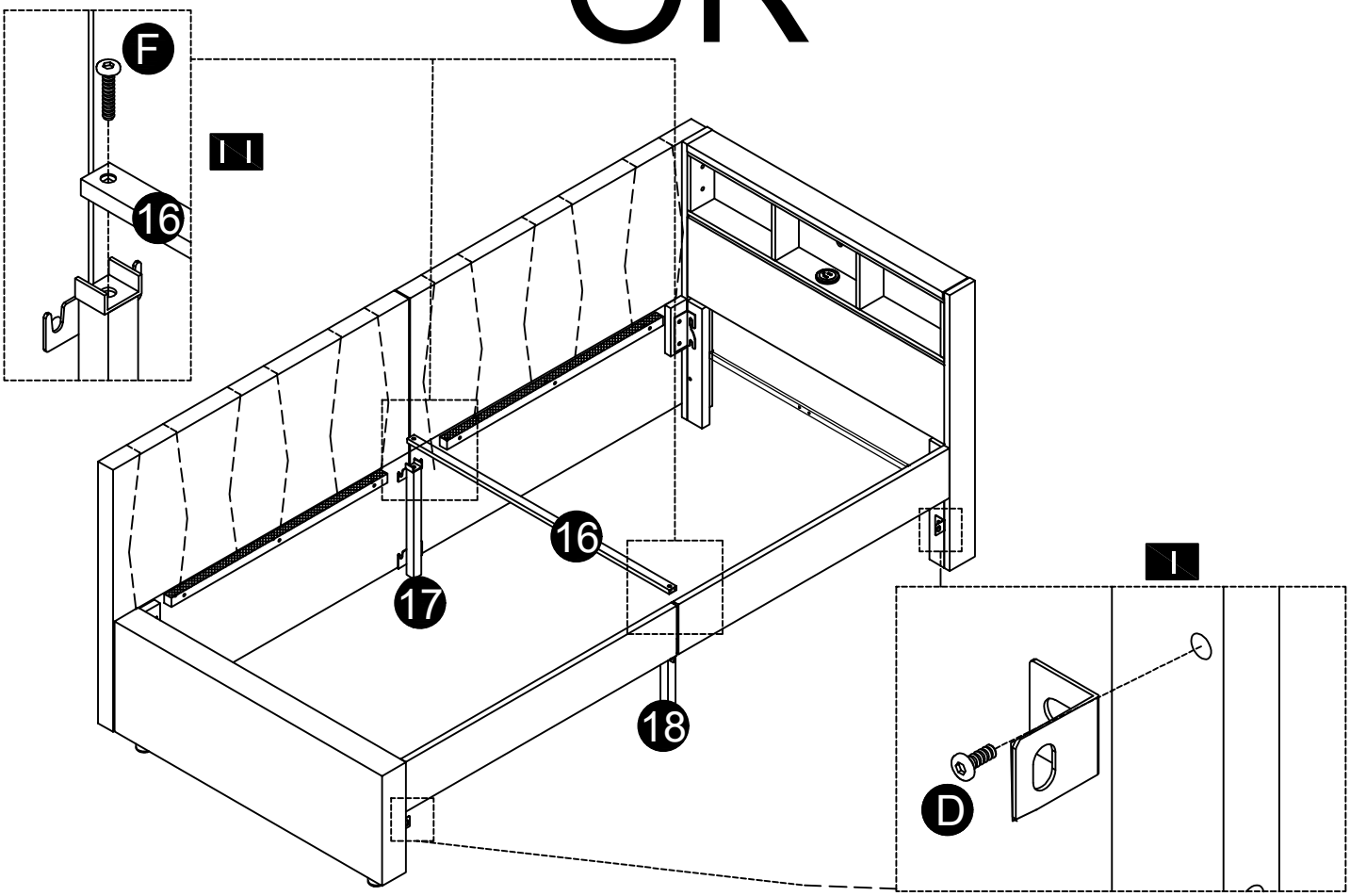

Step 10:

C

x 4

J

x 1

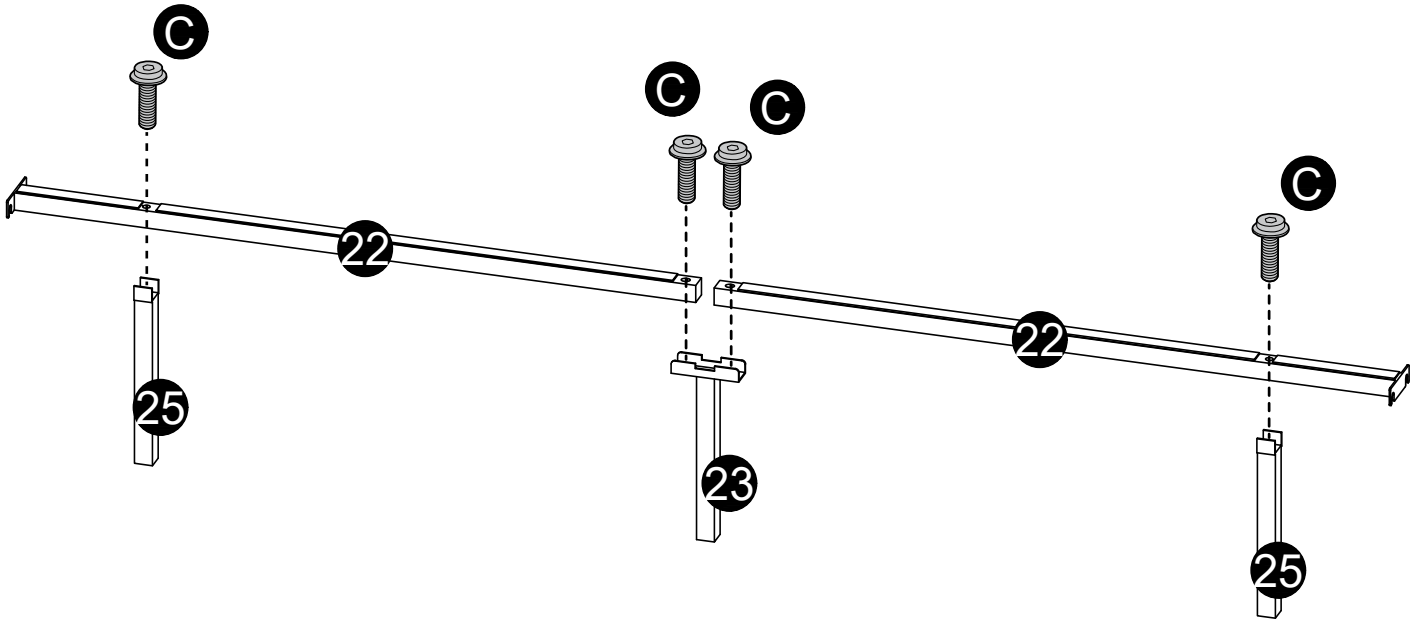

Step 11:

N x 4

K x 1

D x 8

C x 1

J x 1

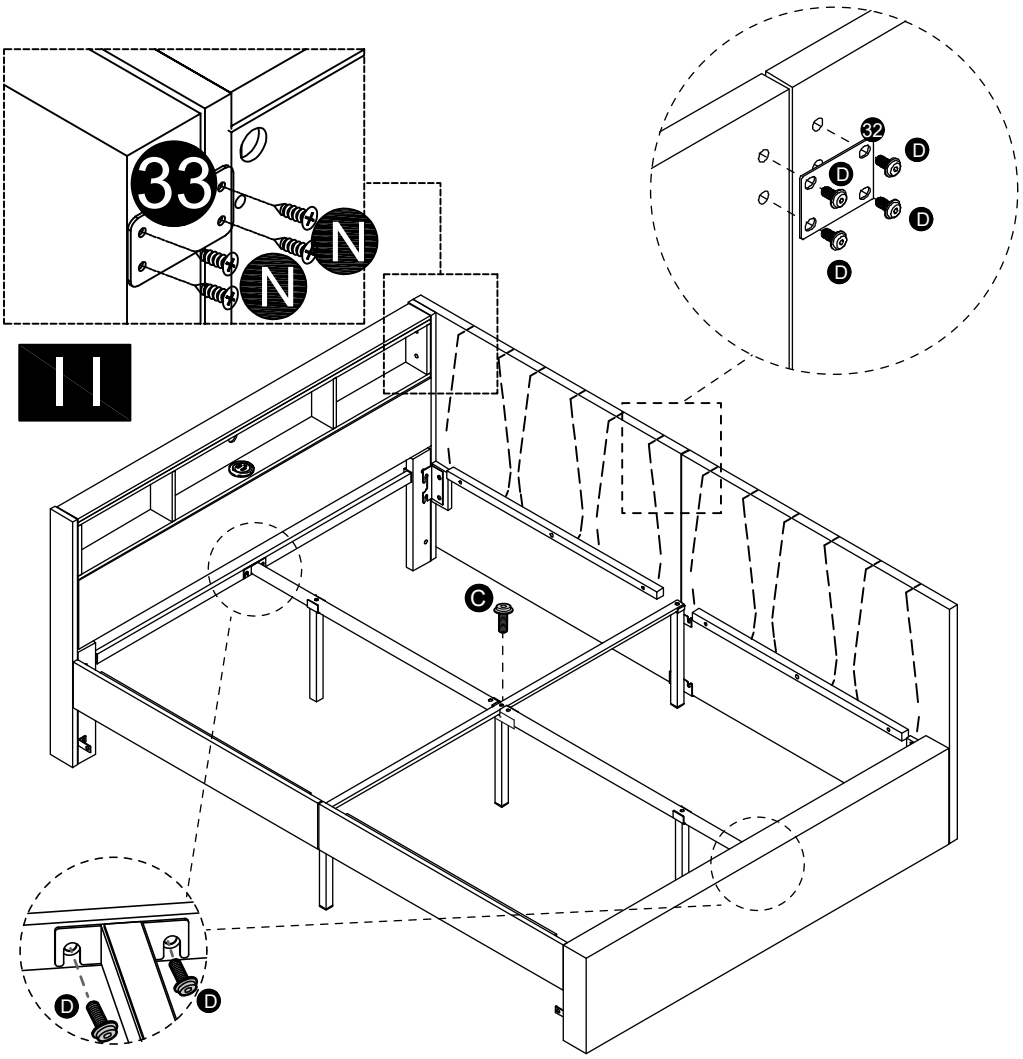

OR

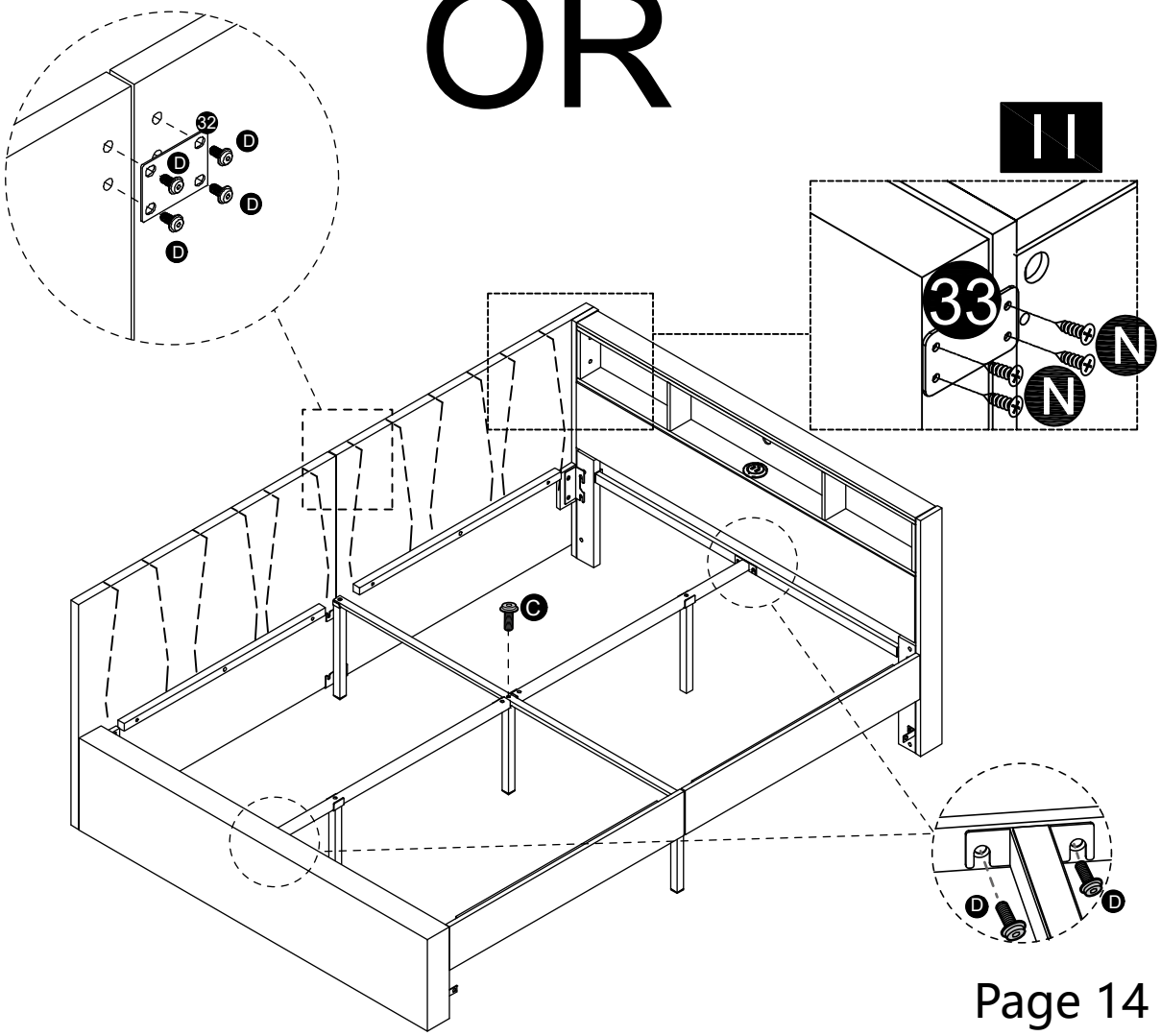

Step 12:

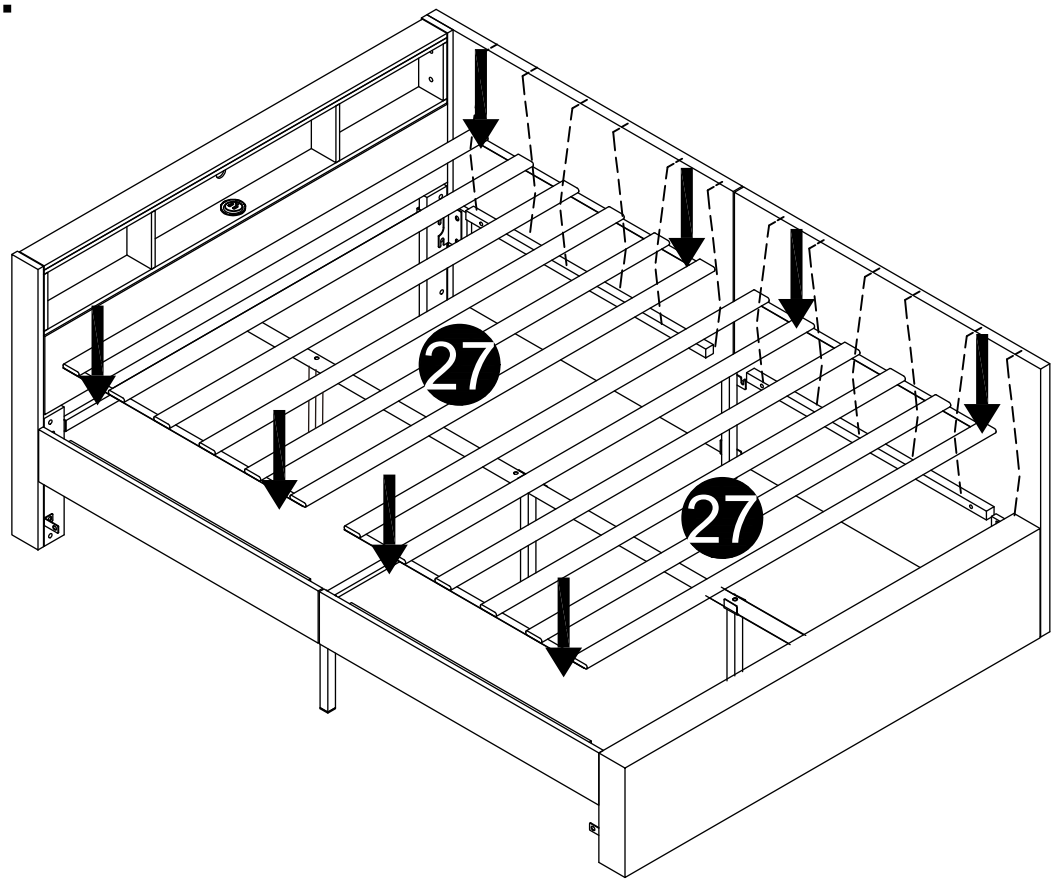

OR

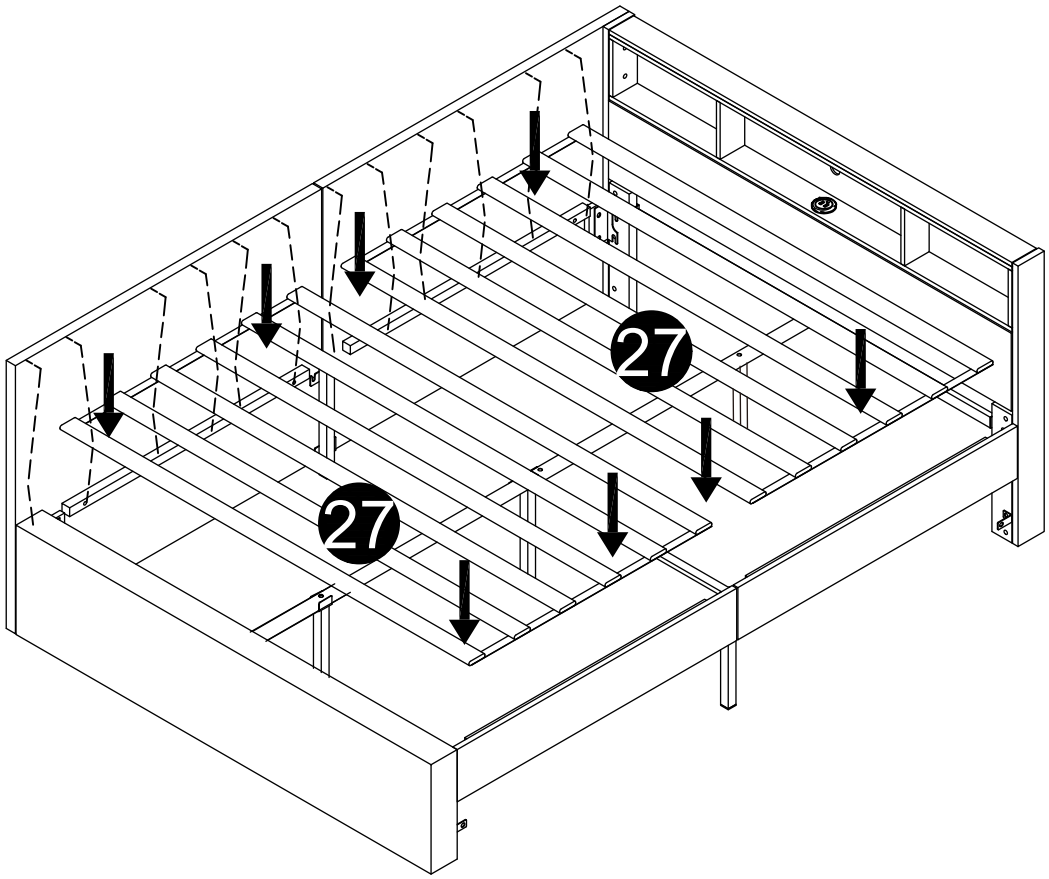

Step 13:

II

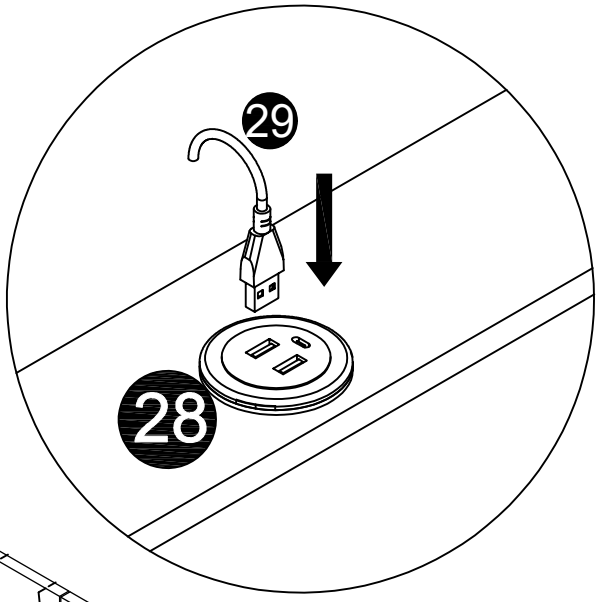

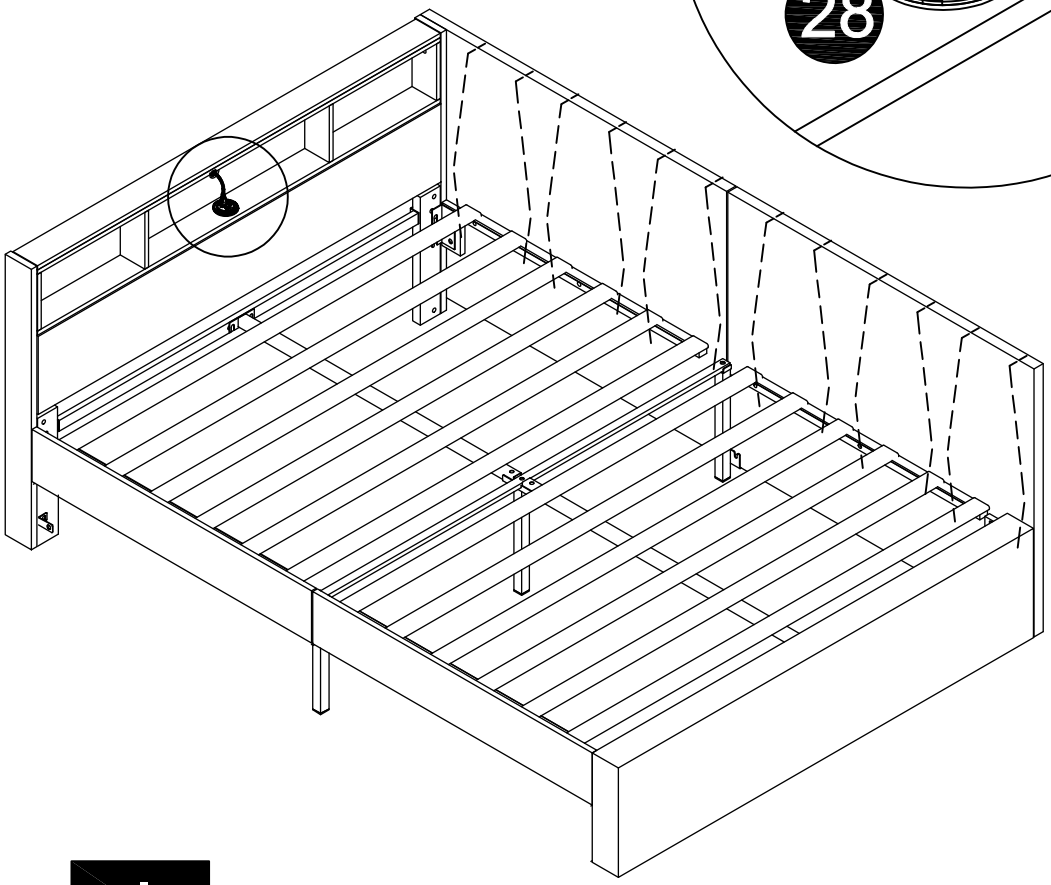

I

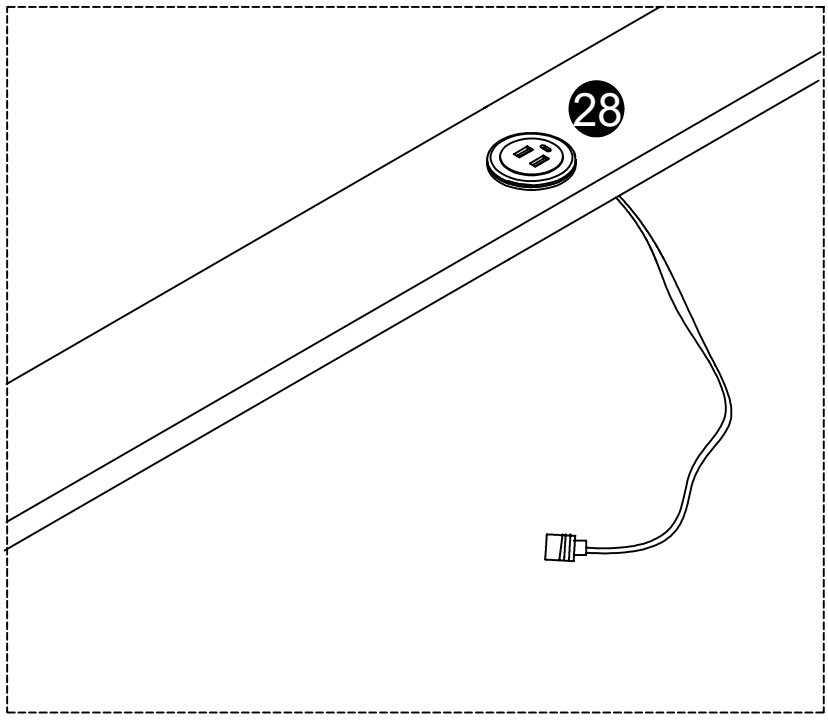

Step 14:

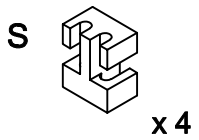

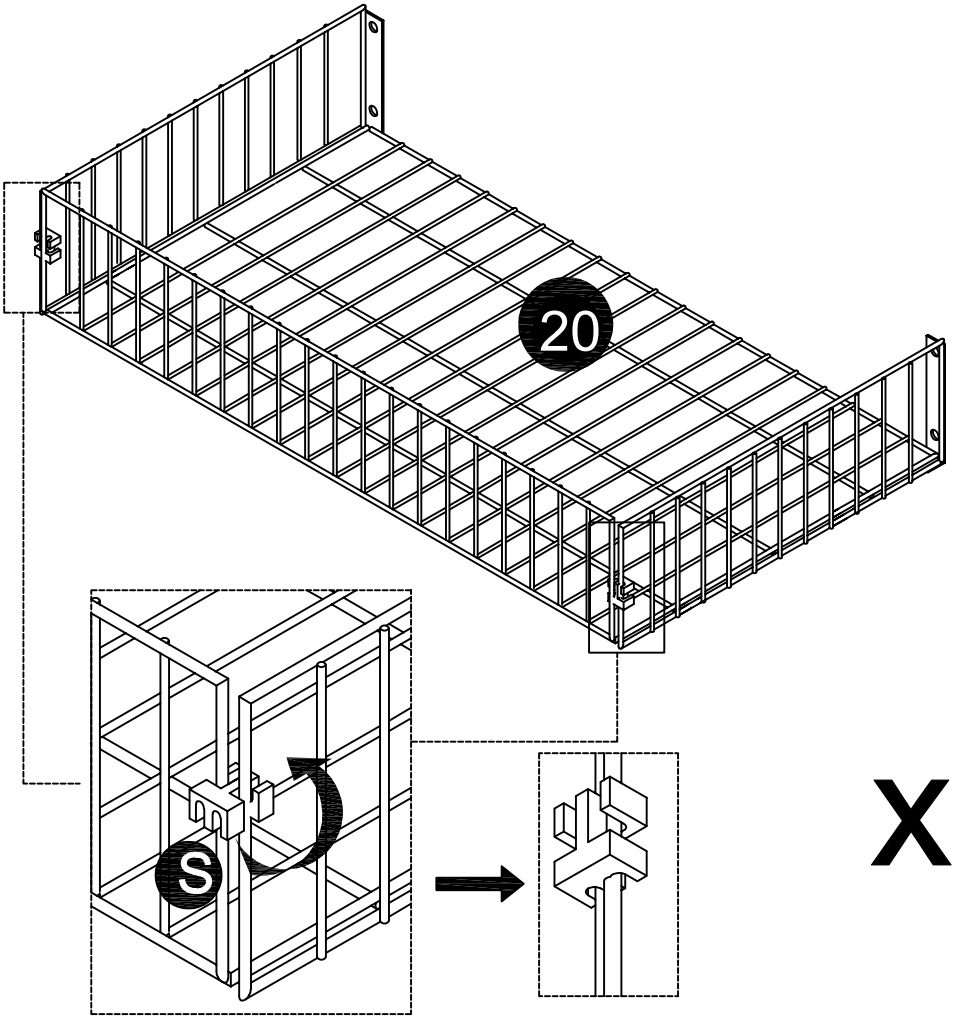

x2

Step 15:

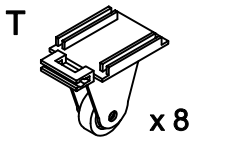

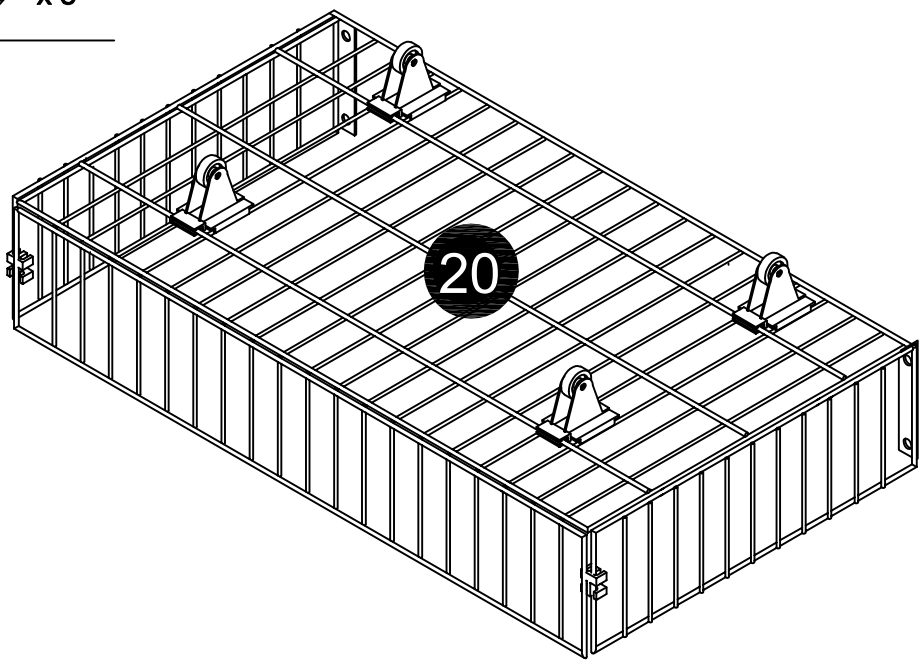

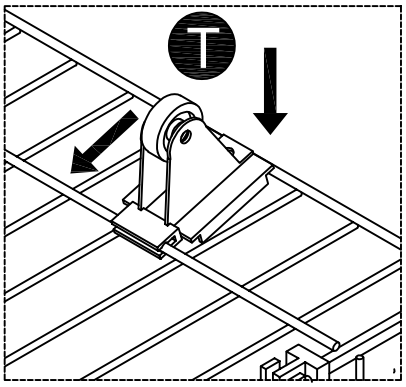

x2

Step 16:

H

x 8

K

x 1

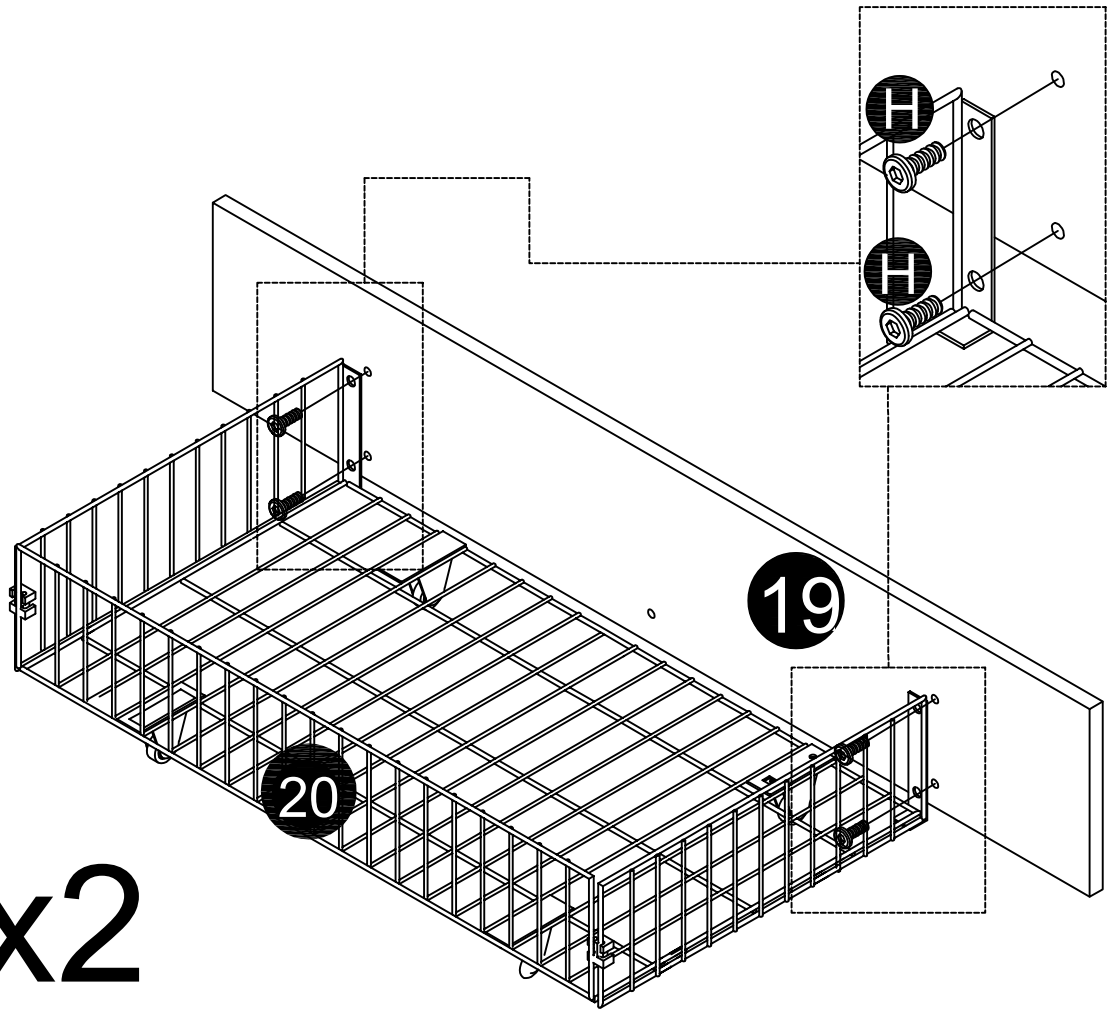

x2

Step 17:

H

x 2

K

x 1

U

x 2

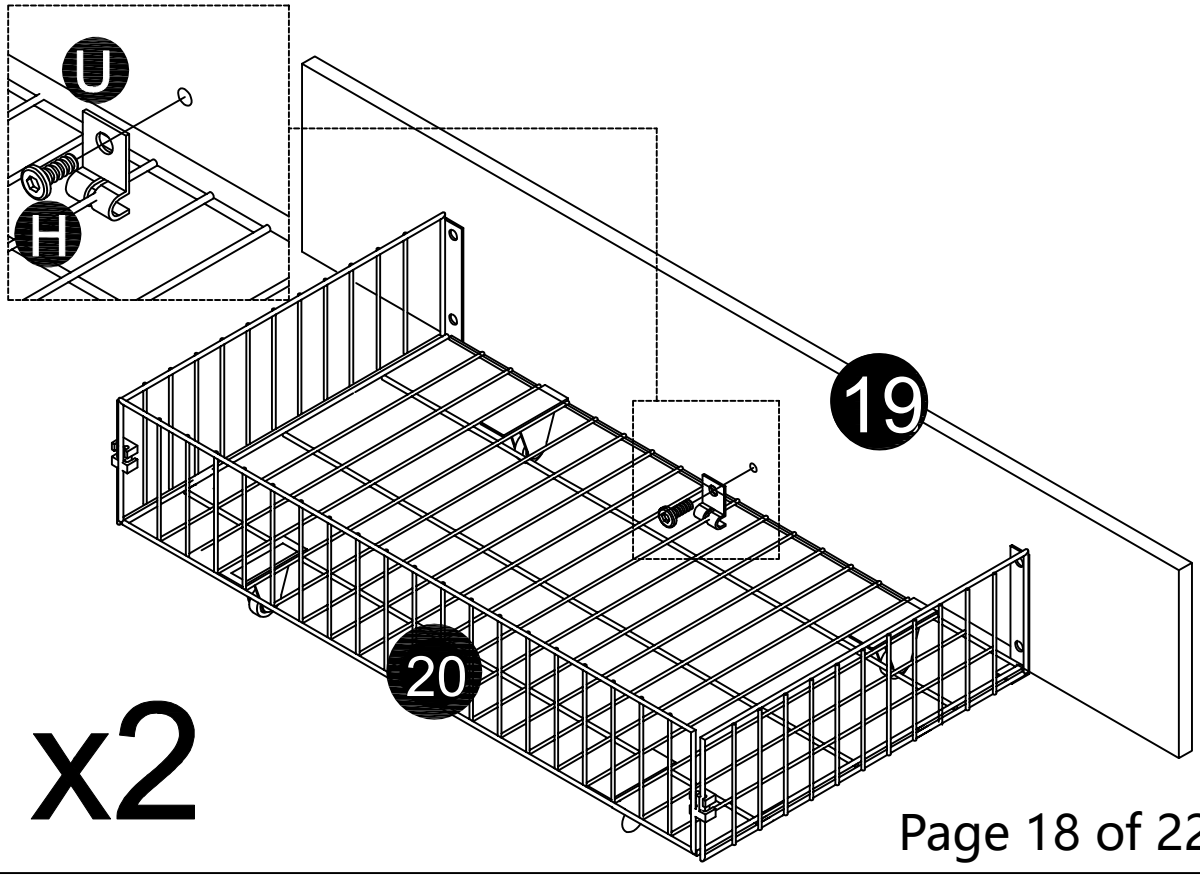

x2

Step 18:

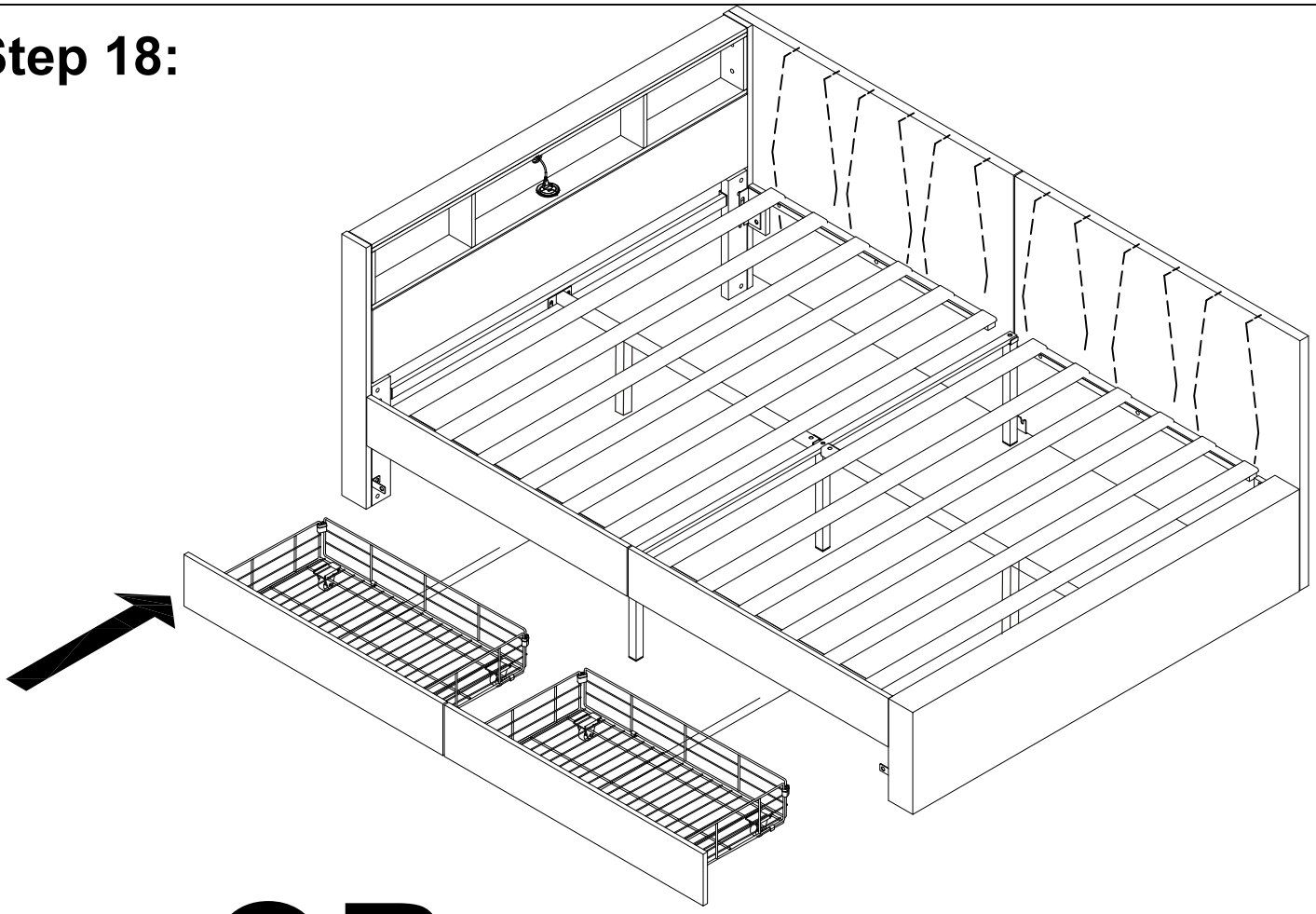

OR

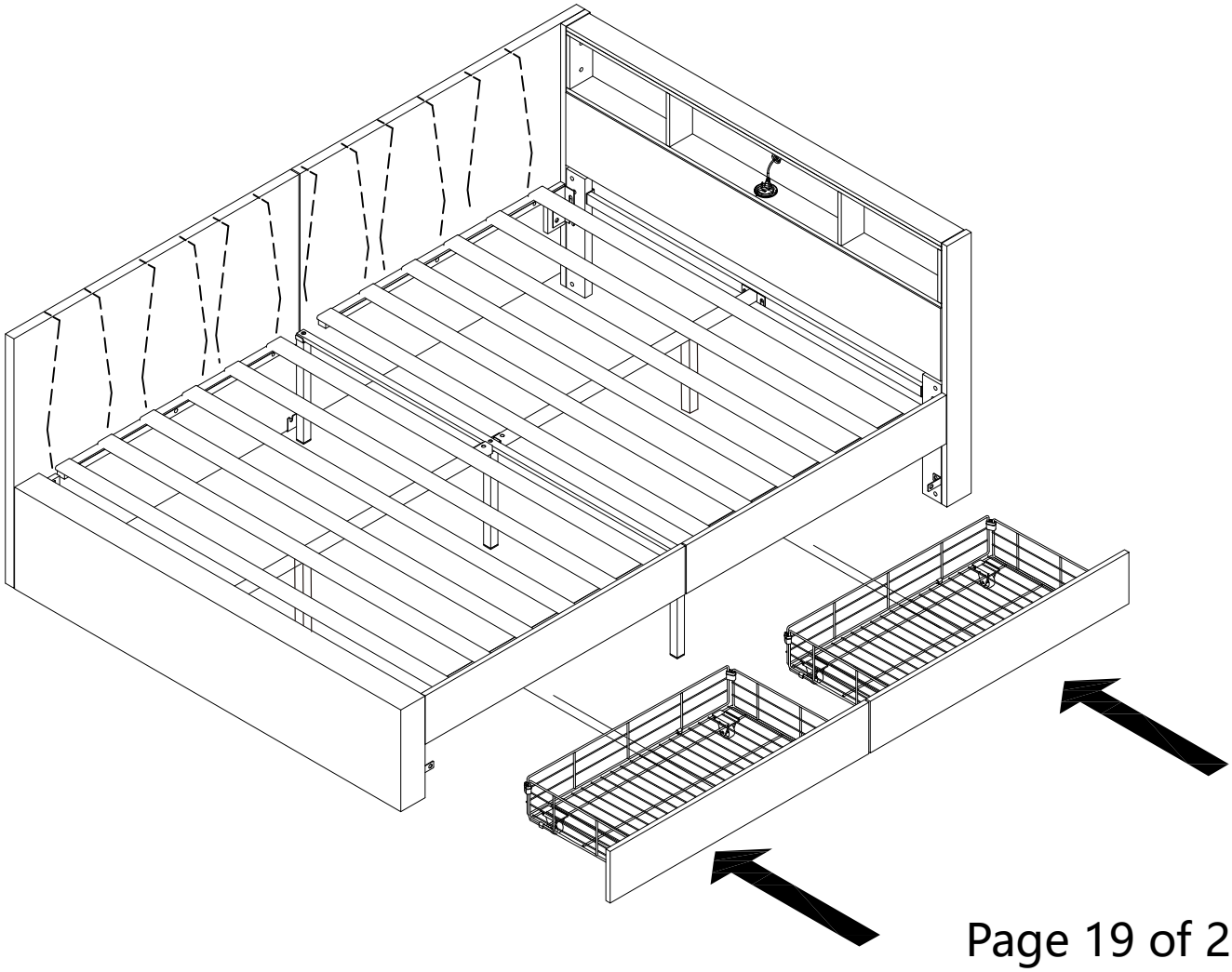

VERIFICATION OF CONFORMITY

Reference No.	:	**WTN23N07163435E**
Applicant	:	**Guangdong Zhangong Electrical Technology Co., LTD**
Address	:	**701, Building 29, Zhifu Garden, Xingtan Town, Shunde District, Foshan City**
Manufacturer	:	**Same as applicant**
Address	:	**Same as applicant**
Product	:	**Furniture Power Distrbution Units**
Model No.	:	**ZG-JJY-1UK to -8UK, others see attachment**
Technical data	:	**250 Vac, 50 - 60 Hz, 13 A, USB: 5 Vdc, 2 A**

Test Standards:

BS EN IEC 55015:2019+A11:2020
BS EN 61547:2009
BS EN IEC 61000-3-2:2019+A1:2021
BS EN 61000-3-3:2013+A1:2019+A2:2021

The above product has been tested by us with the listed standards and found in compliance with the Electromagnetic Compatibility Regulations 2016 of United Kingdom (S.I. 2016 No.1091). It is possible to use UKCA marking to demonstrate the compliance with the regulations.

BS EN IEC 55015: Limits and methods of measurement of radio disturbance characteristics of electrical lighting and similar equipment
BS EN 61547:Equipment for general lightingpurposes — EMC immunity requirements
BS EN IEC 61000-3-2:Electromagnetic compatibility (EMC)Part 3-2: Limits — Limits for harmonic current emissions (equipment input current ≤16 A per phase)
BS EN 61000-3-3:Electromagnetic compatibility (EMC)Part 3-3: Limits - Limitation of voltage changes, voltage fluctuations and flicker in public low-voltage supply systems, for equipment with rated current ≤ 16 A per phase and not subject to conditional connection

The referred test report(s) show that the product complies with standard(s) recognized as giving presumption of compliance with the essential requirements in the above mentioned UK regulations. Other relevant UK regulations have to be observed.

After preparation of the necessary technical documentation as well as the declaration of conformity, the UKCA marking as shown below can be affixed on the equipment under the sole responsibility of the manufacturer.

UKCA

Manager:Jianzhong Mao
Date:2023-09-05

The statement is based on a single evaluation of the sample of above mentioned product. It does not imply an assessment of the whole production.

Waltek Testing Group (Ningbo) Co., Ltd.

Hotline: 400-840-2288 E-mail: nb@waltek.com.cn
Http://www.waltek.com.cn

Ver.10.22, WALTEK is registered trademark. Utilisation and application requires prior approval.

VERIFICATION OF CONFORMITY

Attachment

Model list

Reference No.: WTN23N07163435E

No.	Model	Rated Input	Max Current	Max Output	Note
1.	ZG-JJY-1	250 Vac, 50 - 60 Hz	13 A	USB: 5 Vdc, 2 A	/
2.	ZG-JJY-1UK	250 Vac, 50 - 60 Hz	13 A	USB: 5 Vdc, 2 A	/
3.	ZG-JJY-2	250 Vac, 50 - 60 Hz	13 A	USB: 5 Vdc, 2 A	/
4.	ZG-JJY-2UK	250 Vac, 50 - 60 Hz	13 A	USB: 5 Vdc, 2 A	/
5.	ZG-JJY-3	250 Vac, 50 - 60 Hz	13 A	USB: 5 Vdc, 2 A	/
6.	ZG-JJY-3UK	250 Vac, 50 - 60 Hz	13 A	USB: 5 Vdc, 2 A	/
7.	ZG-JJY-4	250 Vac, 50 - 60 Hz	13 A	USB: 5 Vdc, 2 A	/
8.	ZG-JJY-4UK	250 Vac, 50 - 60 Hz	13 A	USB: 5 Vdc, 2 A	/
9.	ZG-JJY-5	250 Vac, 50 - 60 Hz	13 A	USB: 5 Vdc, 2 A	/
10.	ZG-JJY-5UK	250 Vac, 50 - 60 Hz	13 A	USB: 5 Vdc, 2 A	/
11.	ZG-JJY-6	250 Vac, 50 - 60 Hz	13 A	USB: 5 Vdc, 2 A	/
12.	ZG-JJY-6UK	250 Vac, 50 - 60 Hz	13 A	USB: 5 Vdc, 2 A	/
13.	ZG-JJY-7	250 Vac, 50 - 60 Hz	13 A	USB: 5 Vdc, 2 A	/
14.	ZG-JJY-7UK	250 Vac, 50 - 60 Hz	13 A	USB: 5 Vdc, 2 A	/
15.	ZG-JJY-8	250 Vac, 50 - 60 Hz	13 A	USB: 5 Vdc, 2 A	/
16.	ZG-JJY-8UK	250 Vac, 50 - 60 Hz	13 A	USB: 5 Vdc, 2 A	/

Verification of compliance Verification of compliance Verification of compliance Verification of compliance

Verification of Compliance

Verification No.:	MK25070091P01-E01
Name and address of Applicant:	**Shenzhen CWG Technology Co., Ltd** 3/F, Building A, Yongshenghui Industrial Park, Chuangye Road, Shiyan Street, Bao'an District, Shenzhen
Name and address of Manufacturer	**Shenzhen CWG Technology Co., Ltd** 3/F, Building A, Yongshenghui Industrial Park, Chuangye Road, Shiyan Street, Bao'an District, Shenzhen
Product name:	**LED Strip**
Rated:	5V ⎓
Product model(s):	CWG-5050RGB-60D-5V, CWG-5050RGB-30D-12V, CWG-5050RGB-18D-12V, CWG-5050RGB-60D-24V, CWG-5050RGB-60D-12V, CWG-5050RGB-30D-5V, CWG-5050RGB-18D-5V, CWG-5050-60D-12V, CWG-5050-30D-12V, CWG-5050-60D-24V, CWG-HC5050RGB-60D-12V, CWG-HC5050RGB-30D-12V,CWG-HC5050RGB-60D-24V, CWG-HC5050-60D-12V, CWG-HC5050-30D-12V, CWG-HC5050-60D-24V, CWG-HC5050RGB-30D-5V, CWG-HC5050RGB-60D-5V, CWG-HC5050RGB-144D-5V, CWG-2835-60D-12V, CWG-2835-120D-12V, CWG-2835-60D-24V, CWG-2835-120D-24V, CWG-2835-60D-5V, CWG-2835-120D-5V
Product trademark:	创唯光

This verification confirms that the product meets the requirements of the following standard.
The conformity was demonstrated based on following standard(s) listed by European Commission as harmonized with EMC Directive 2014/30/EU.

EN IEC 55015:2019+A11:2020
EN IEC 61547:2023

The verification has been carried out in accordance with individual rules and conditions agreed with the applicant. Evaluation has been carried out in accordance with:

Test report(s) No.:	MK25070091P01-E01
Test conducted by:	TMC Testing Services (Shenzhen) Co., Ltd.
Verification issue date:	July 17, 2025

Notes:
This verification refers to the above mentioned product and its conformity in regards of above mentioned standard(s) was proven on test sample.
This verification does not imply meeting all essential requirements, assessment of the series-production or any other restricted Notified Bodies conformity assessment procedure appropriate for the product.
This verification holder shall use this verification in connection to verification of conformity and technical data relevant for the product the verification was issued.

TMC Testing Services (Shenzhen) Co., Ltd.
t:86-755-86642861 cert@tmc-lab.com www.tmc-lab.com
1st Floor, Block A1, Zone A, Xinshidai Gongrong Industrial Park, No. 2, Shihuan Road, Shiyan Street, Baoan District, Shenzhen, China

Bauart geprüft TMC Product Safety

Lab Manager
Viviant Jiang

CE

TMC

ASSEMBLY INSTRUCTION

N652P537396W/N652P537397W

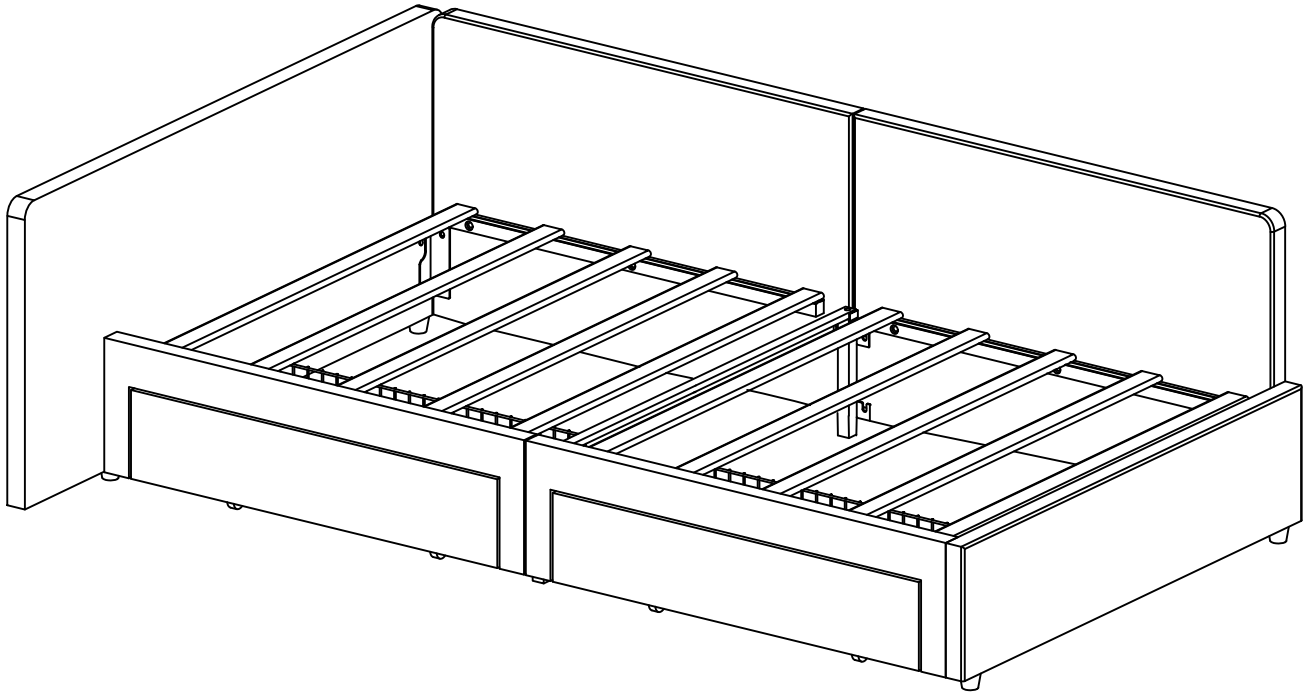

TIPS

1.This product is divided into 2 parcels for delivery. They may not arrive at the same time.Please wait patiently.

2.Please read the instructions fully before assembly. These instructions include important information which could ensure correct assembly. We have been working on providing high quality products for you. However, in the rare instance that your product is defective,missing parts or there are some issues, please don't hesitate to contact our customer service to submit parts requirements, assembly suggestion,or warranty claims, and we will give the best solution as soon as possible. If necessary, we need you to provide some more clear pictures of the issue.

3.Insert the screws in holes and tighten the screws, but not too tight, 70%~80% is ok, finally tighten all the screws. If some issues happened that some screws can not target to the hole or some parts are difficult to install, please adjust the tightness of the screws.

4.2 people are recommended to finish.

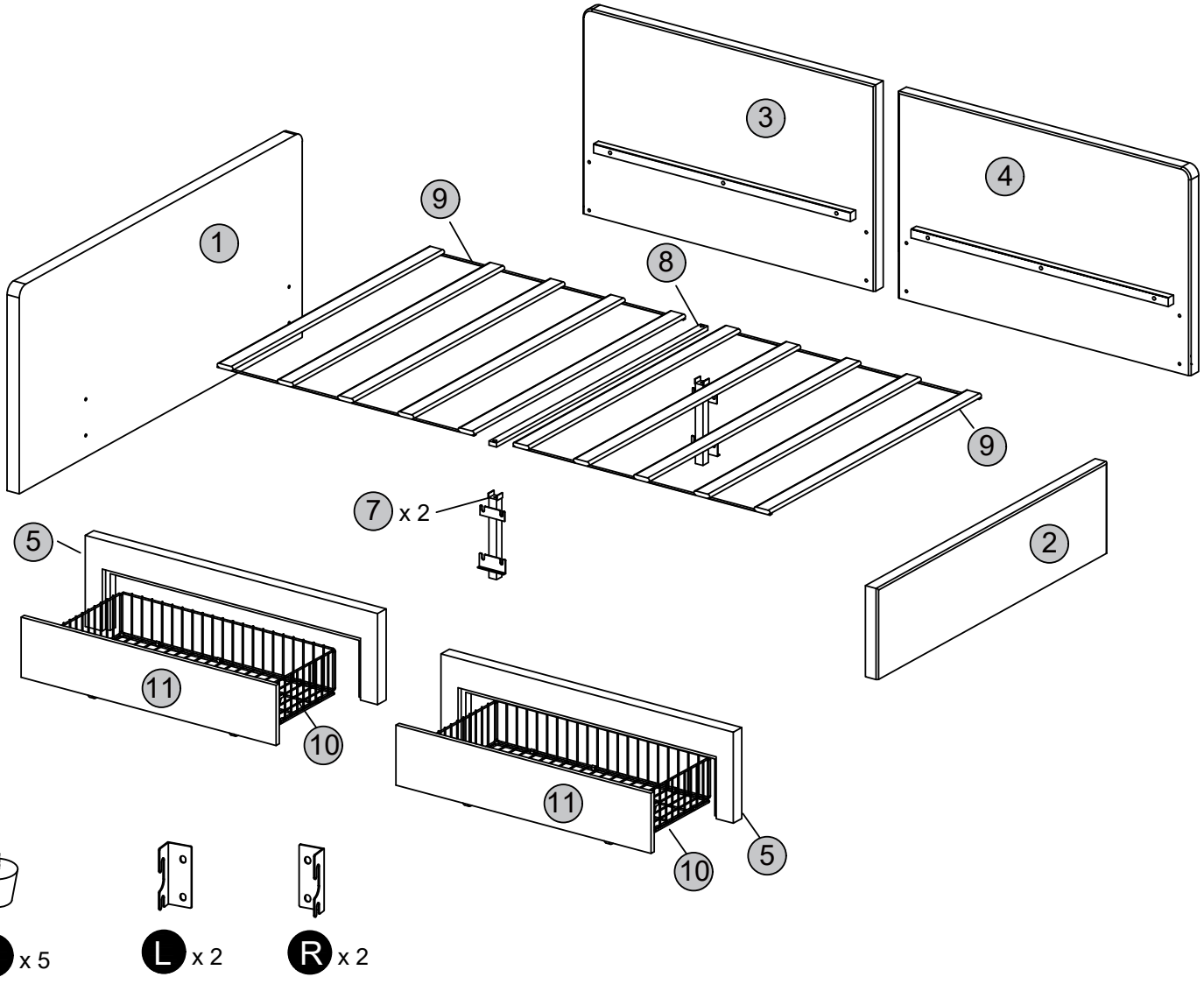



6 x 5

L x 2

R x 2

Part list

N652P537396W

1 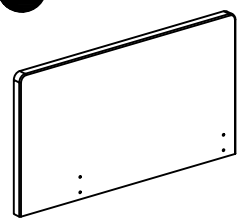 x1	3 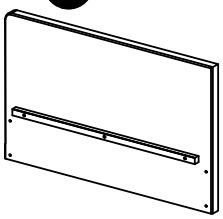 x1	4 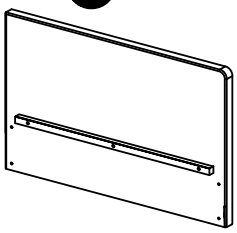 x1	6 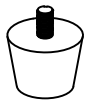 x 5
7 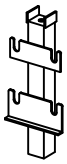 x 2	8  x 1	10 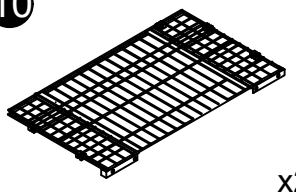 x2	L 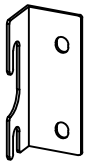 x 2
R 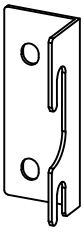 x 2			

Hardware list

N652P537396W

 A M8x20 x 24	 B M8x35 x 2	 C M6x15 x 10	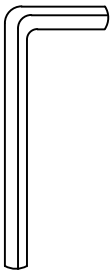 D M5 x 1	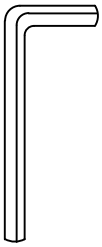 E M4 x 1	 F x 4	 G x 8	 H x 2			

Part list

N652P537397W

2 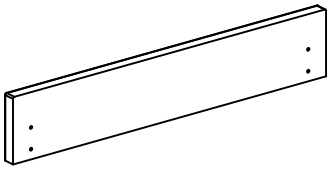 x 1	5 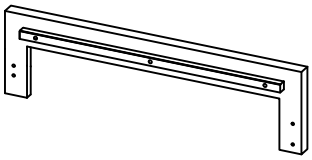 x 2	11 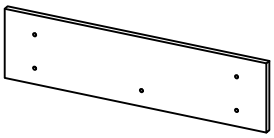 x 2	9 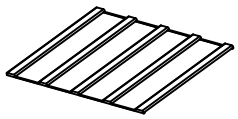 x2

Step 1:

A

x 8

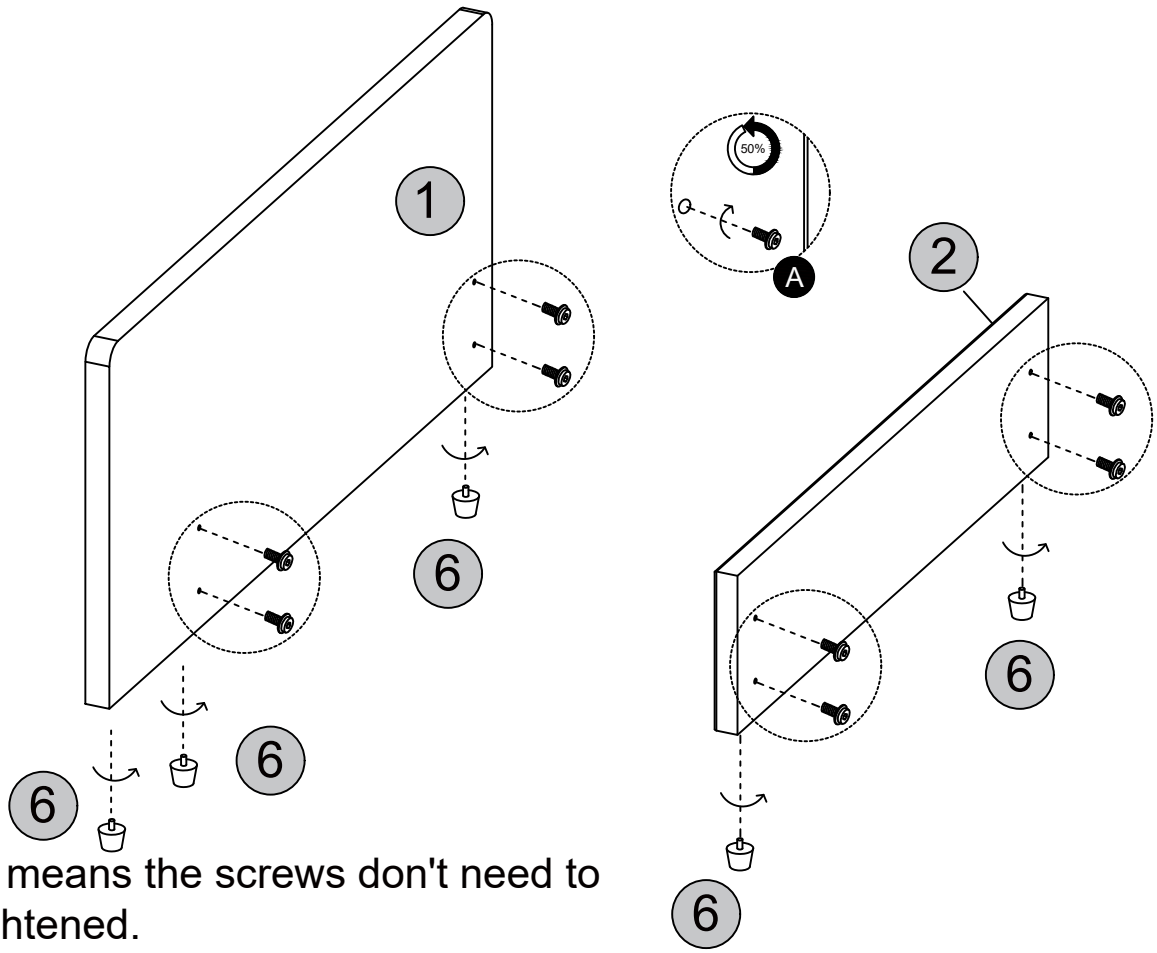

50%: means the screws don't need to be tightened.

Step 2:

A

x 8

D

x 1

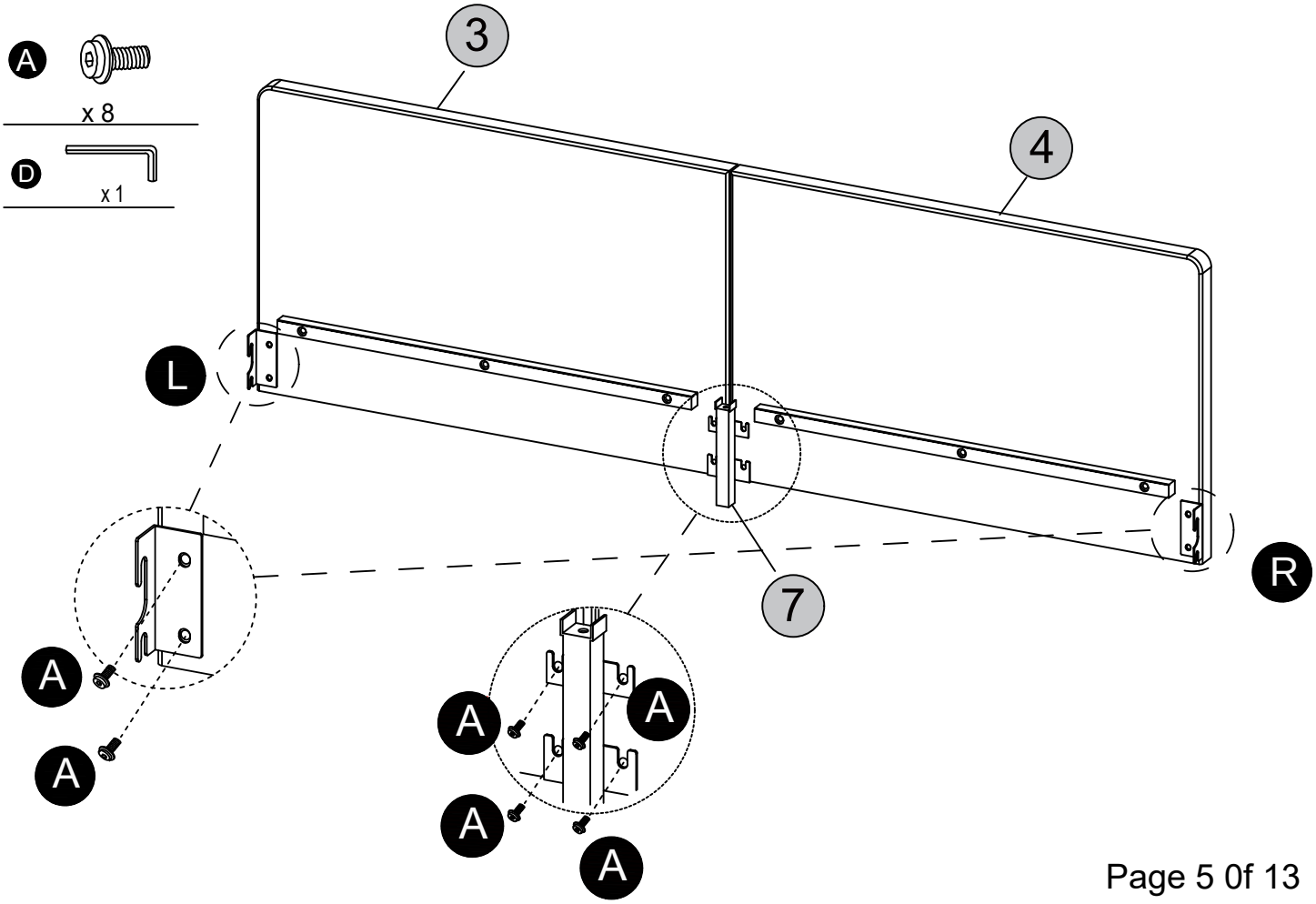

Step 3:

A x 8

D x 1

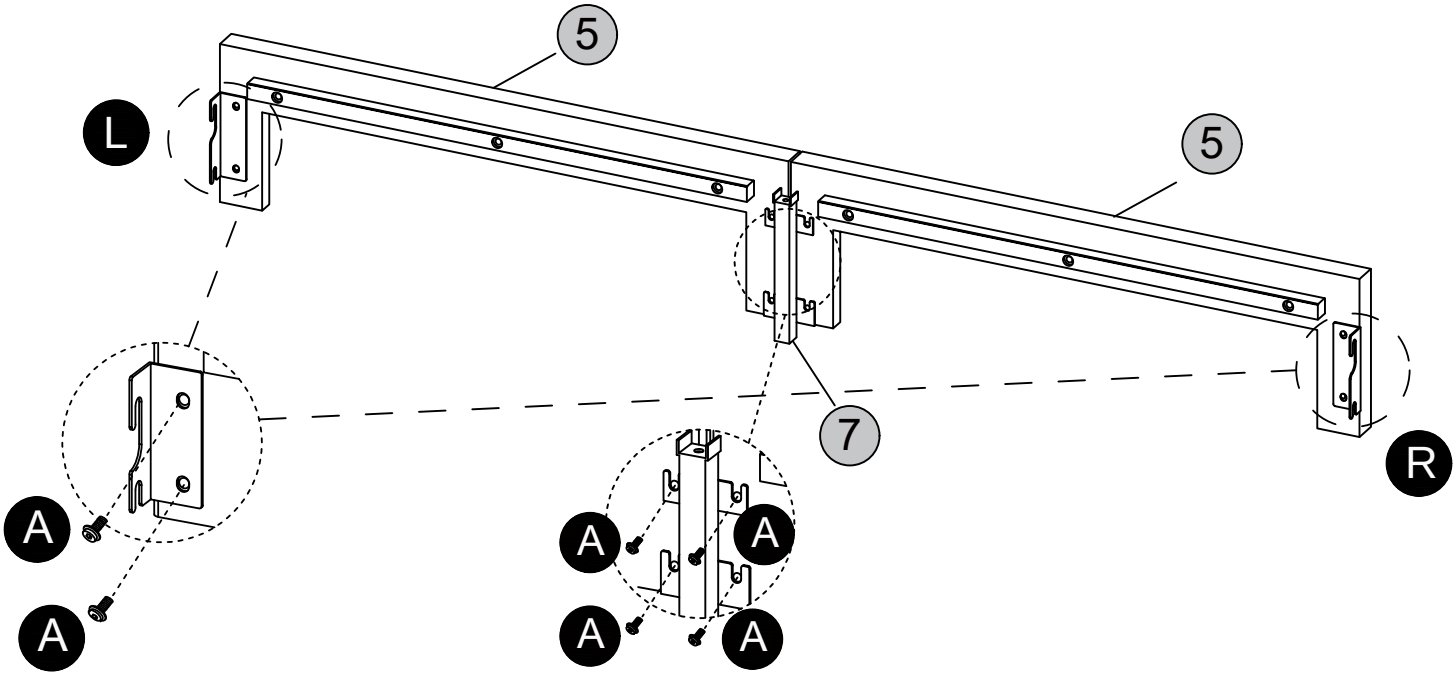

Step 4:

D x 1

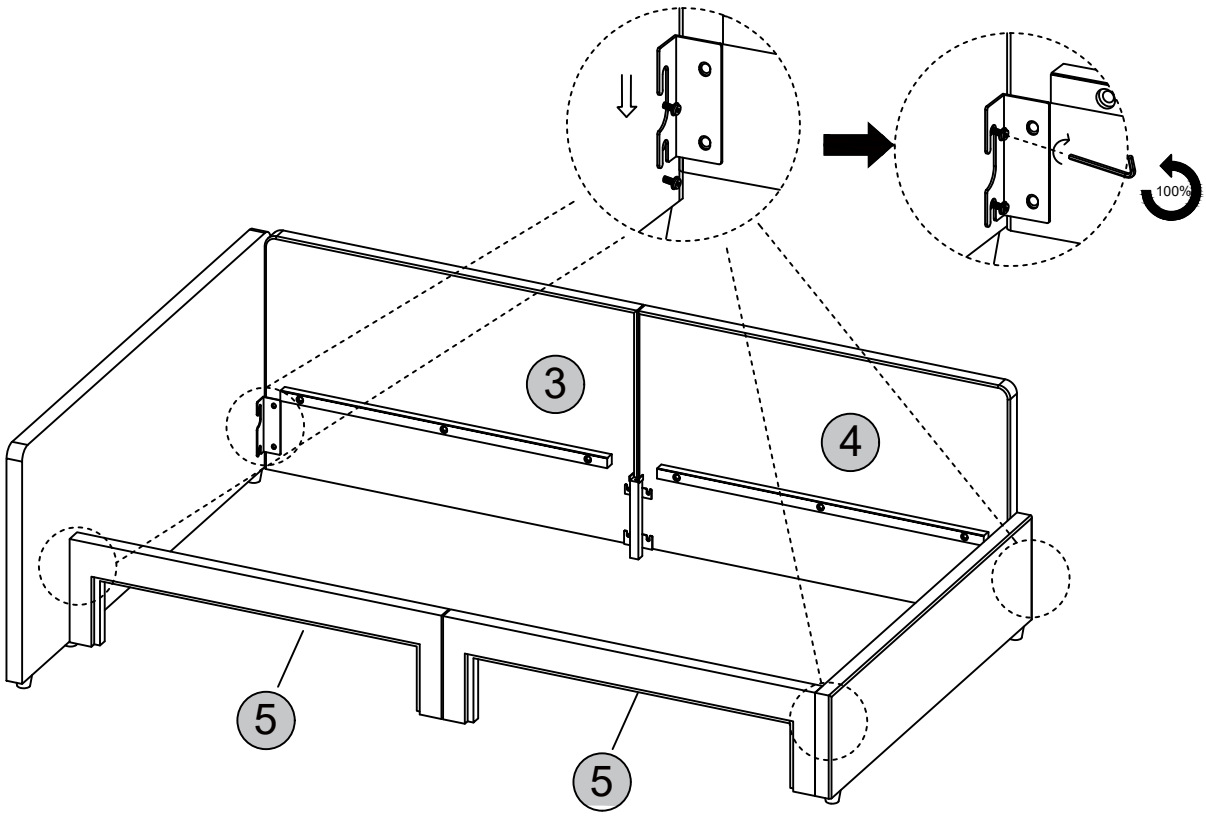

100%: Indicate that the screws need to be tightened.

Step 5:

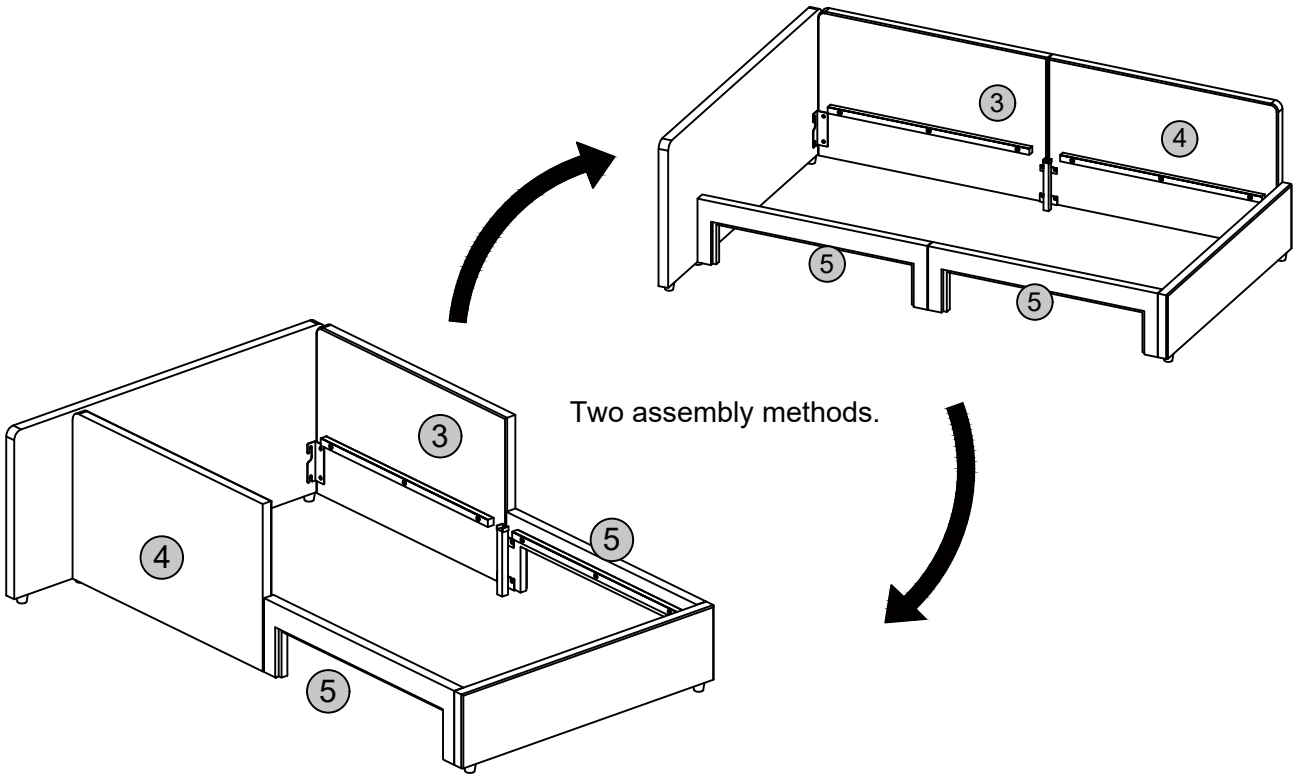

Step 6:

B x 2

D x 1

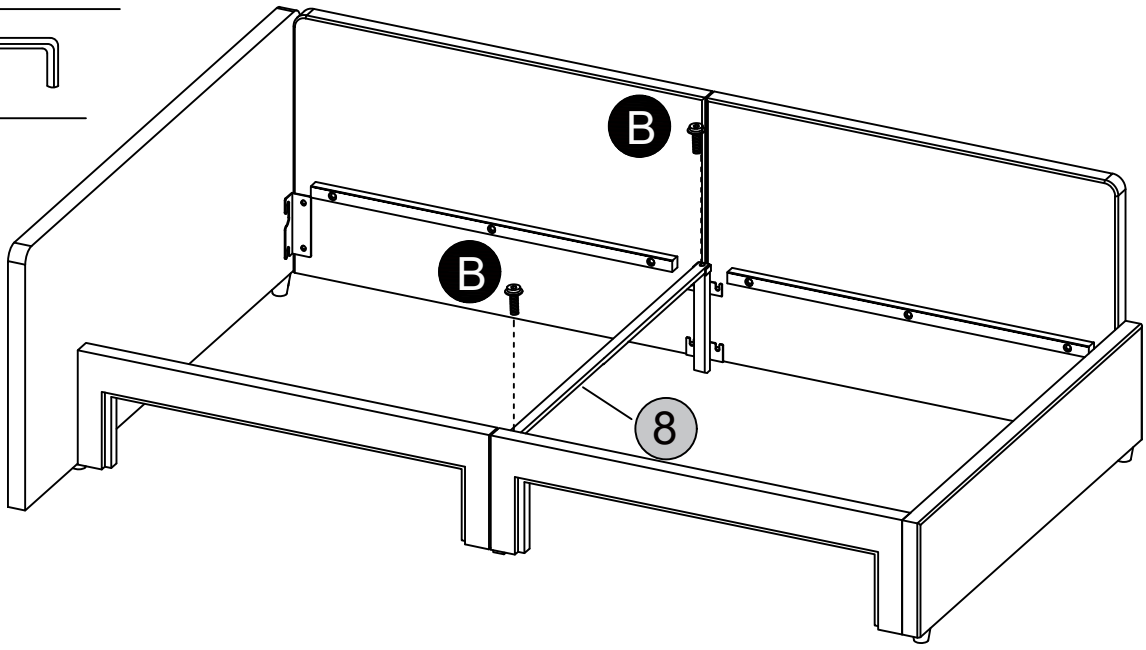

Step 7:

F



x 4

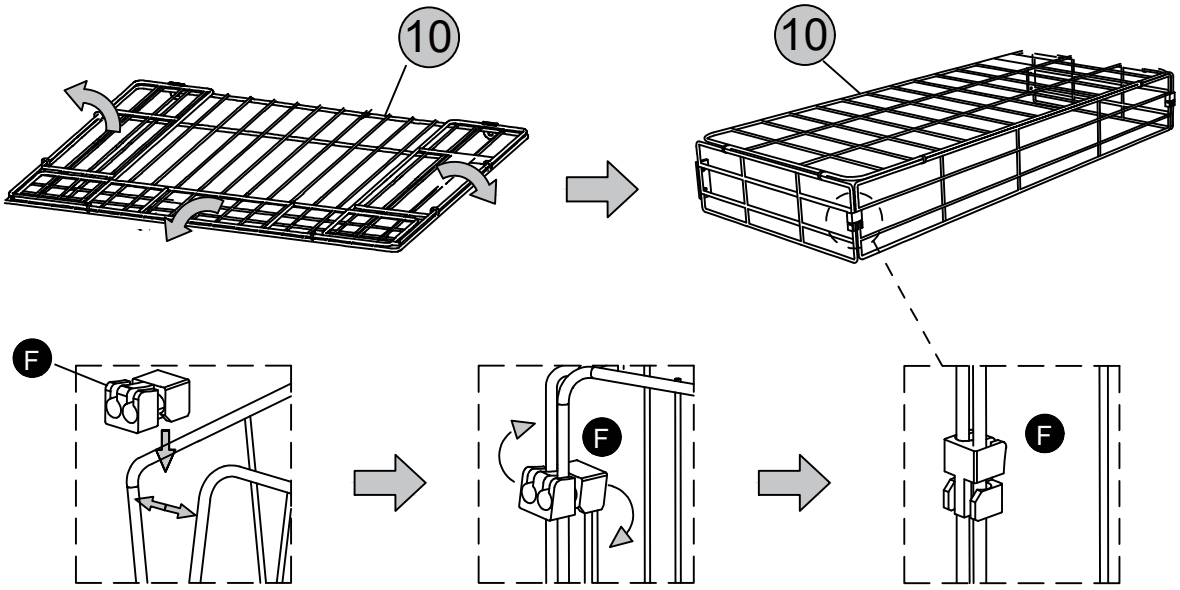

1,Takepart F andinsertit between the left and right steel bars，ensuring a tight fit.

2,Then,rotate part F secure the steel bars in the inner and outer slots,ensuring a tight fit.

3,Finally, adjust the position so that the steel bar and the slot of part F fit.

Step 8:

G



x 8

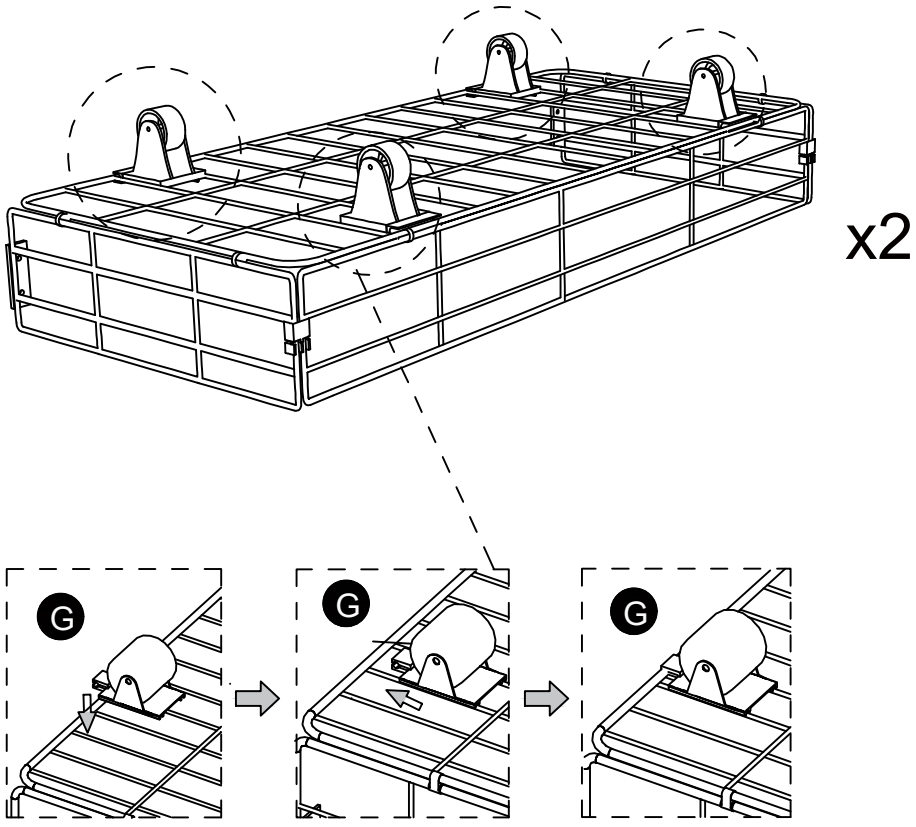

Step 9:

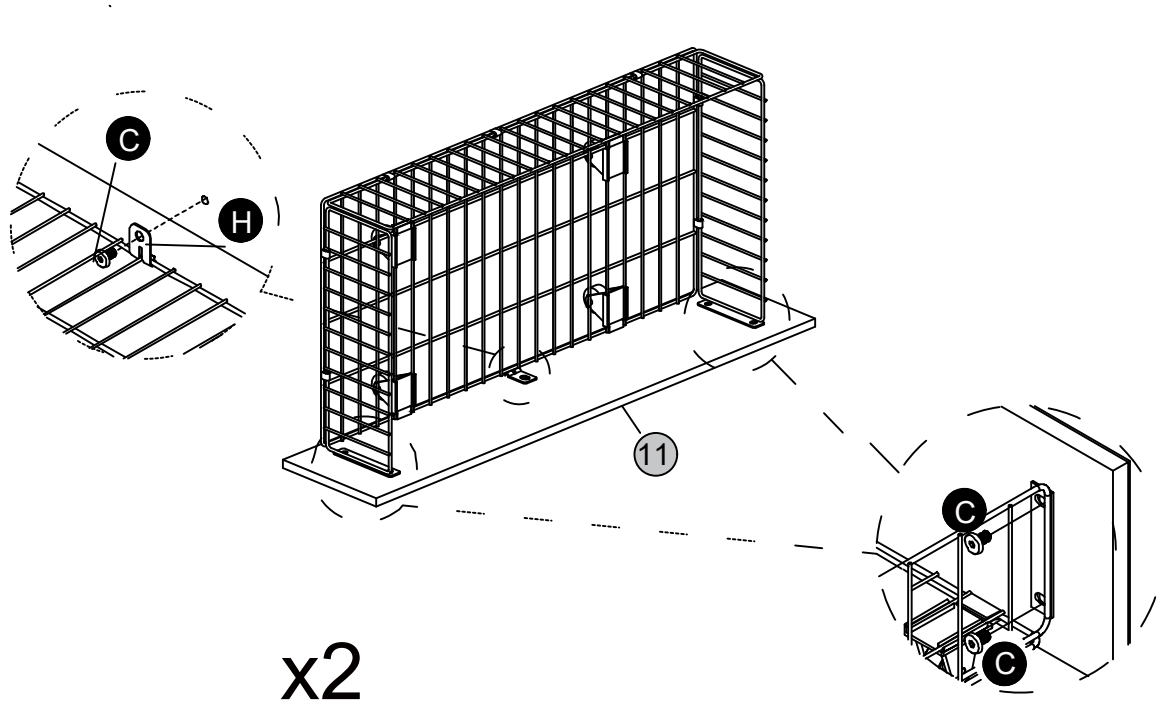

C x 10

E x 1

H x2

x2

Step 10:

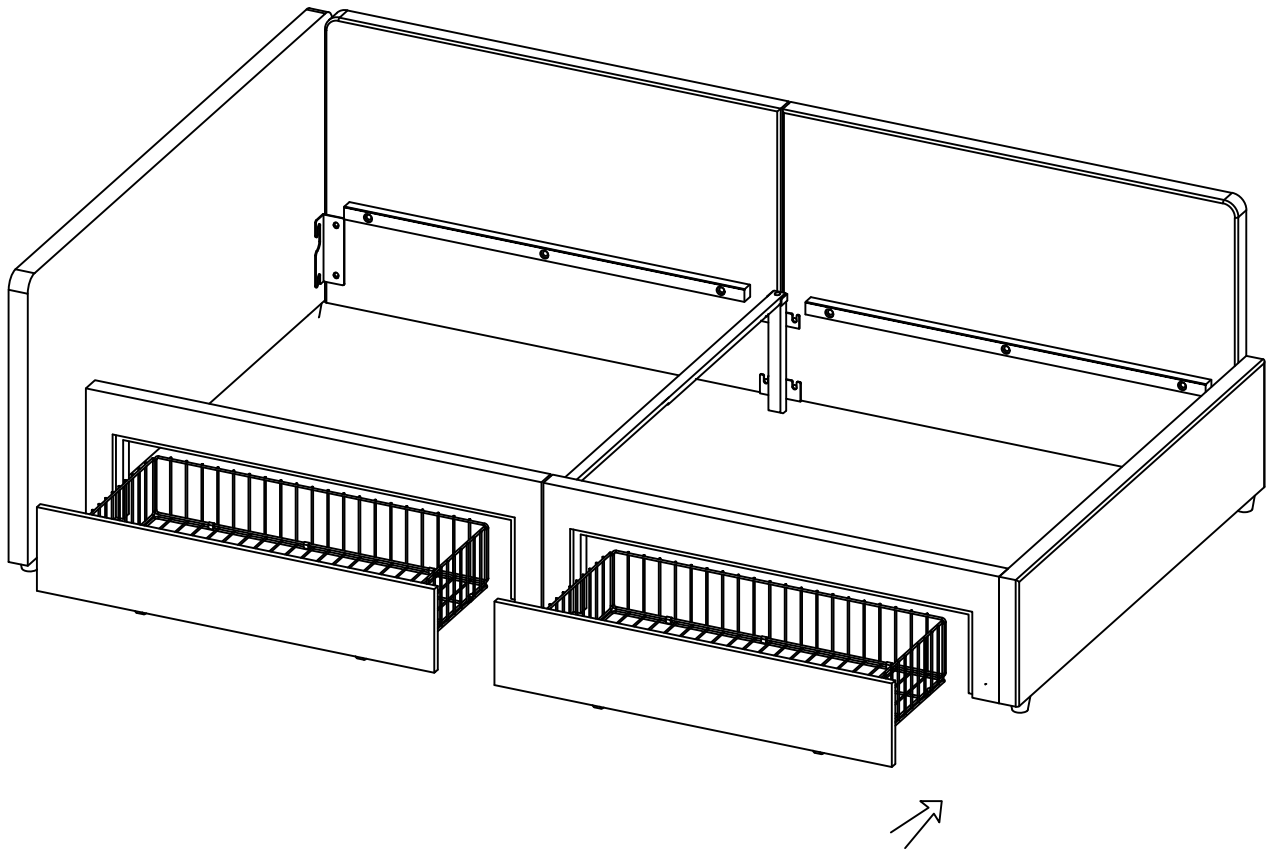

Step 11:

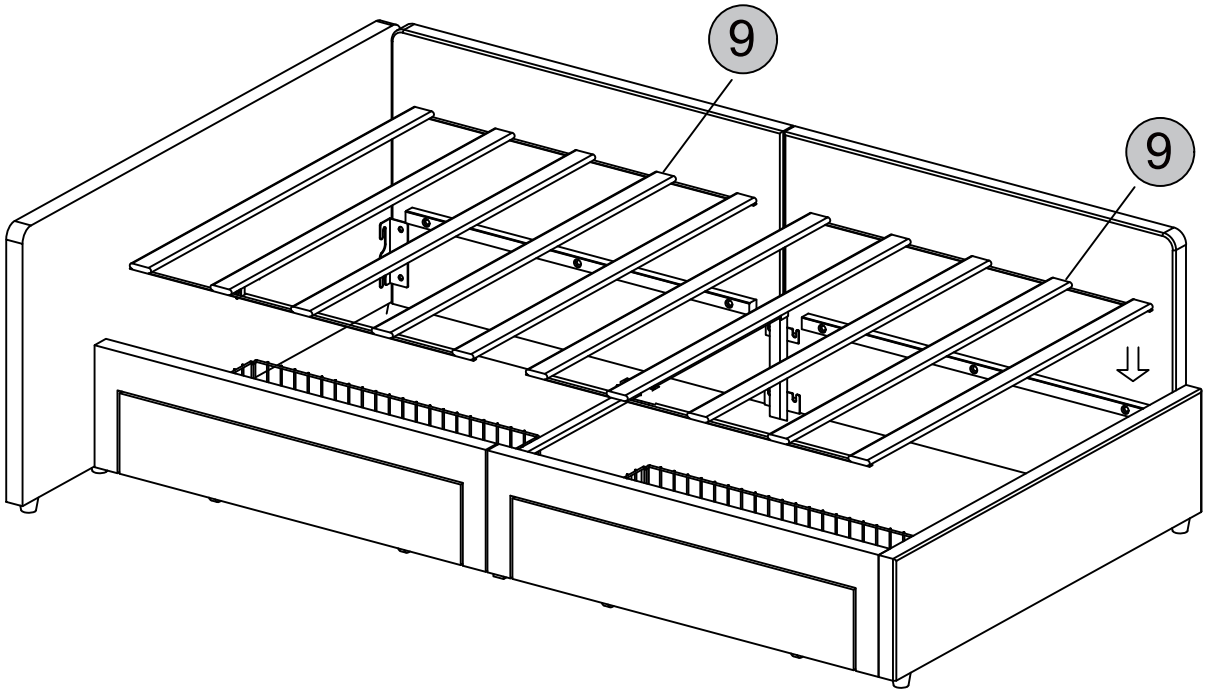

Step 12:

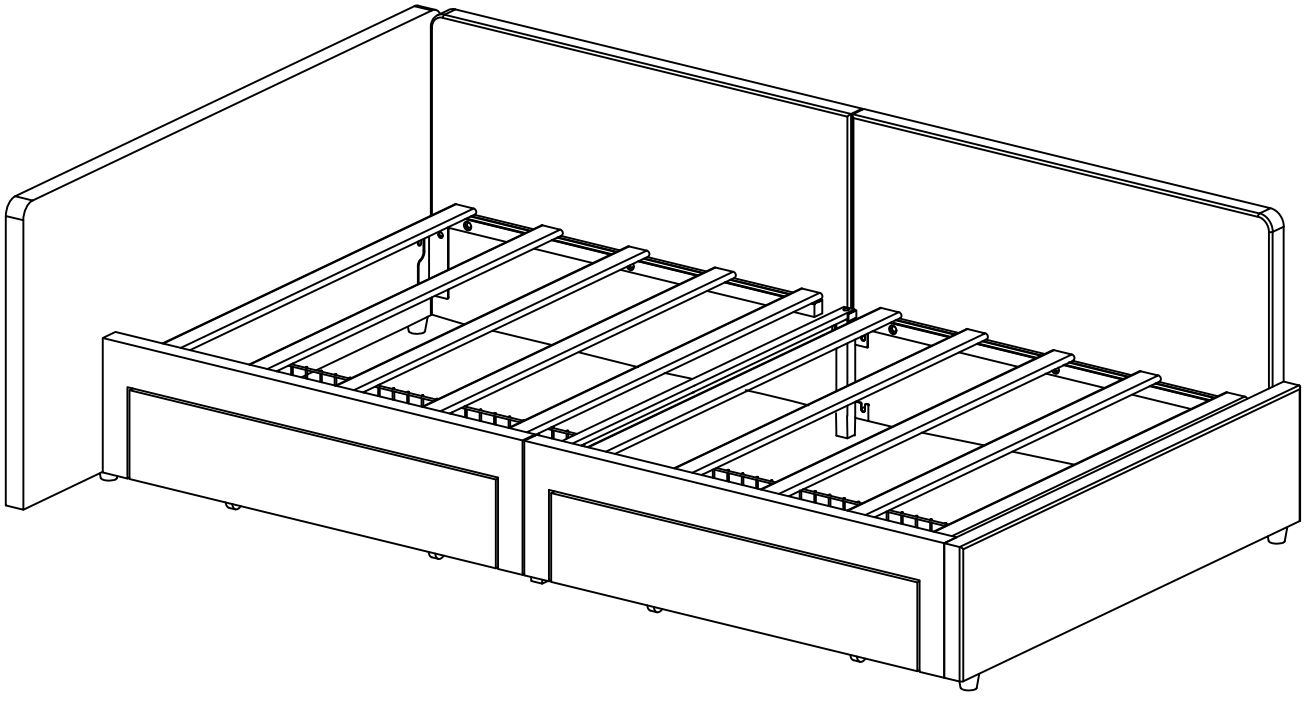

ASSEMBLY INSTRUCTION

N652P537422W/N652P537423W

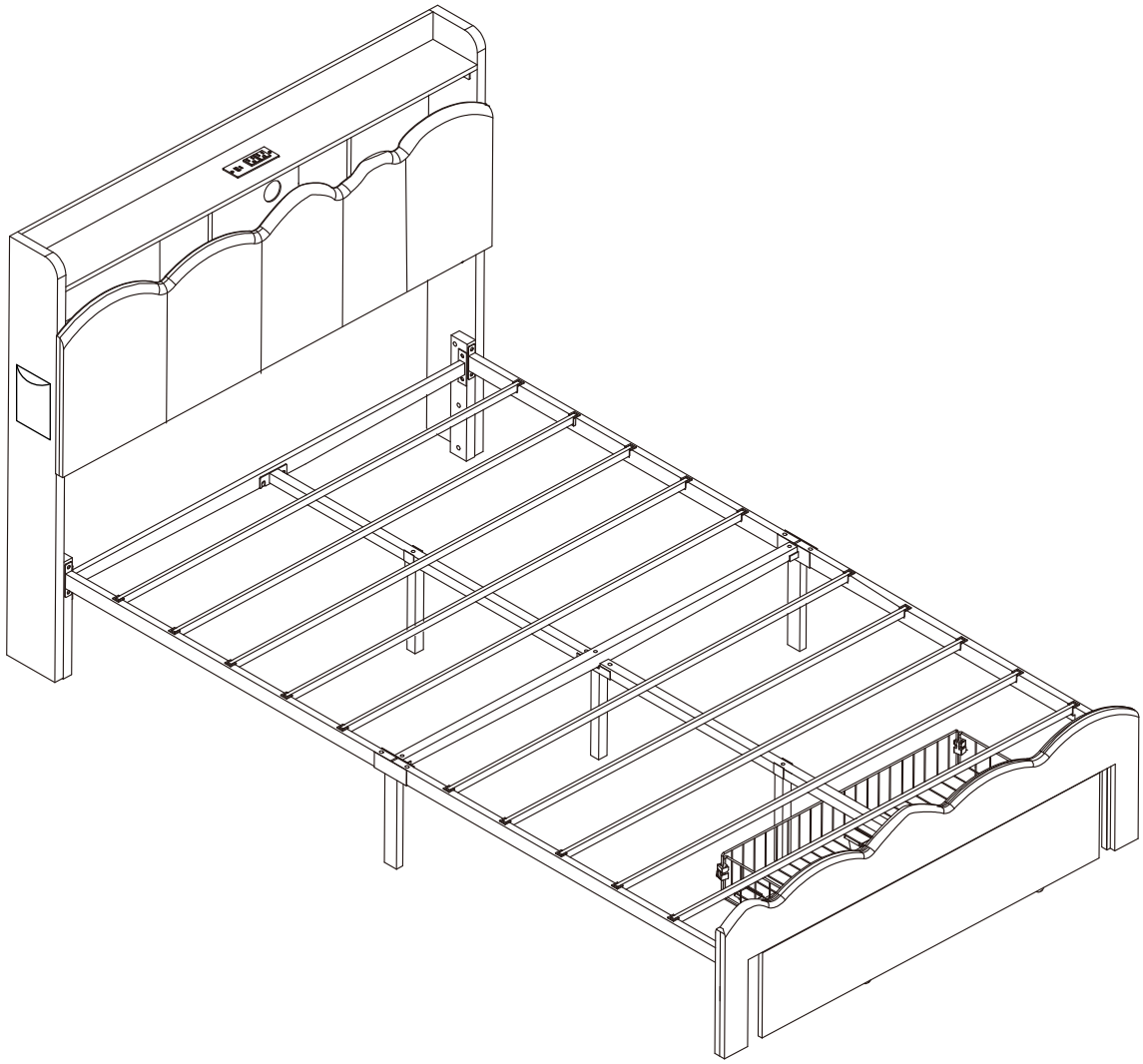

TIPS

1.This product is divided into 2 parcels for delivery. They may not arrive at the same time.Please wait patiently.

2.Please read the instructions fully before assembly. These instructions include important information which could ensure correct assembly. We have been working on providing high quality products for you. However, in the rare instance that your product is defective,missing parts or there are some issues, please don't hesitate to contact our customer service to submit parts requirements, assembly suggestion,or warranty claims, and we will give the best solution as soon as possible. If necessary, we need you to provide some more clear pictures of the issue.

3.Insert the screws in holes and tighten the screws, but not too tight, 70%~80% is ok, finally tighten all the screws. If some issues happened that some screws can not target to the hole or some parts are difficult to install, please adjust the tightness of the screws.

4.2 people are recommended to finish.

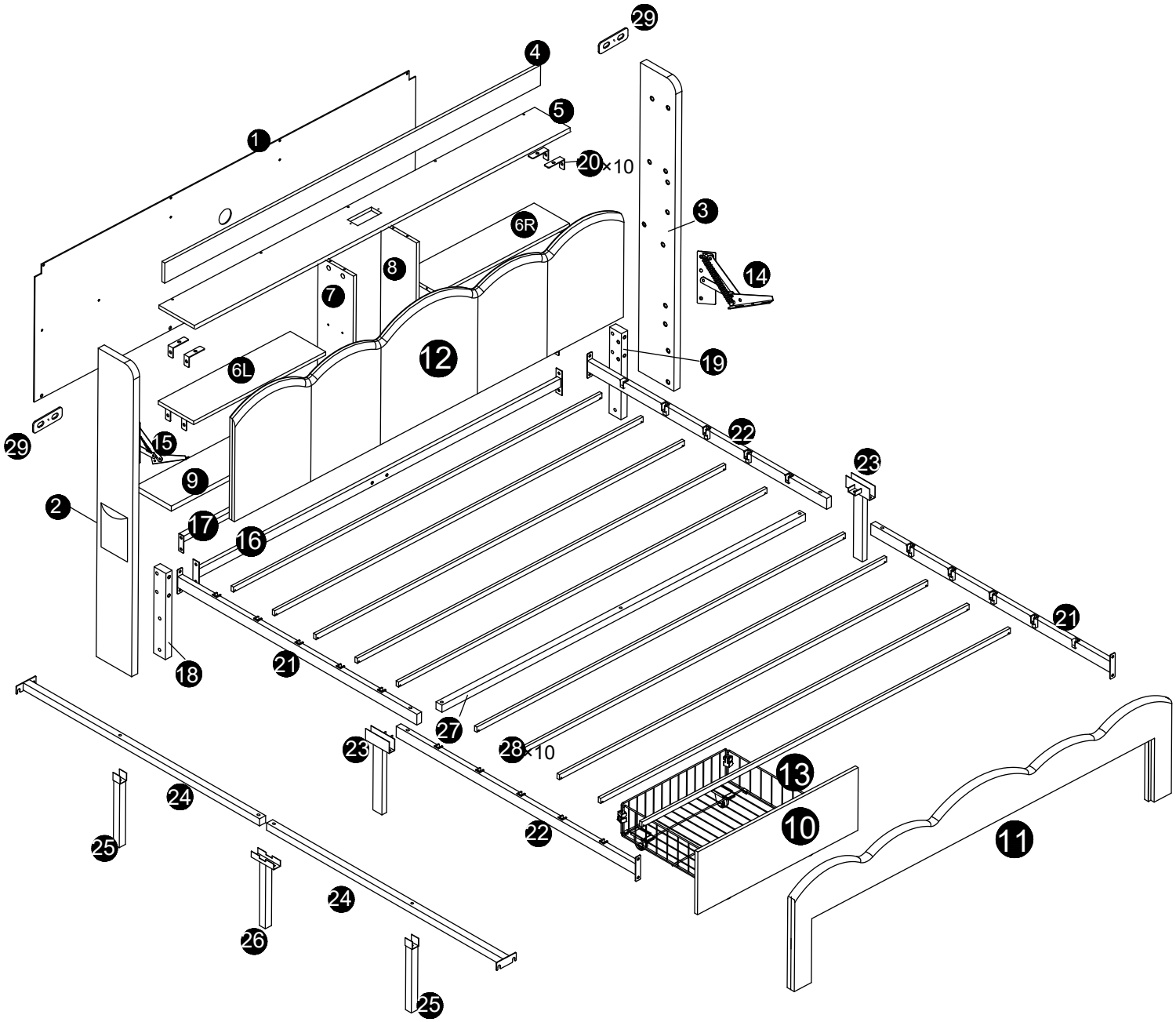
29
4
5
1
20 ×10
3
6R
8
14
7
12
19
6L
22
29
15
23
9
2
17
16
21
18
21
27
28 ×10
23
13
24
10
11
25
22
24
26
25

Part list

N652P537422W

1 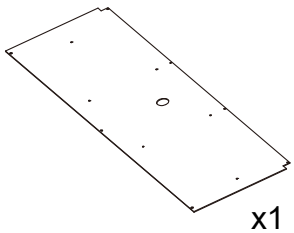 x1	6L 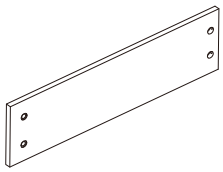 x1	6R 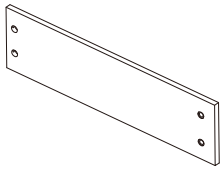 x1	7 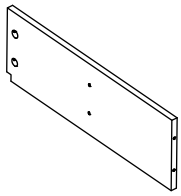 x1
8 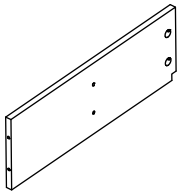 x 1	10 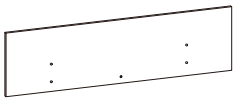 x 1	11 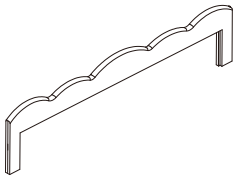 x1	12 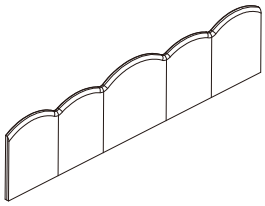 x1
13 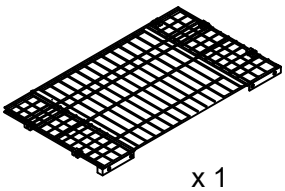 x 1	28 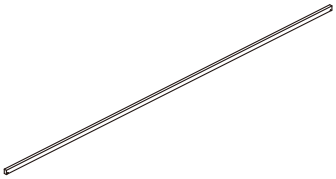 x 10		

Part list

N652P537423W

2 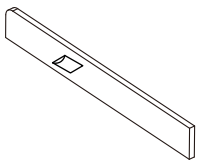 x 1	3 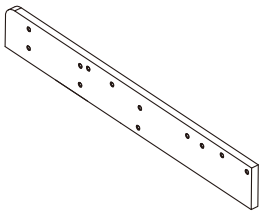 x 1	4 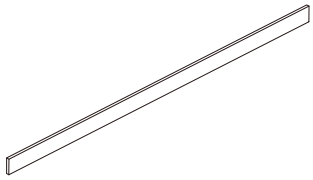 x 1	5 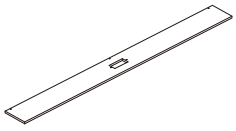 x1	
9 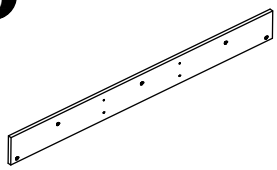 x 1	14 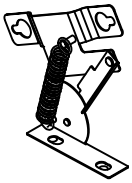 x 1	15 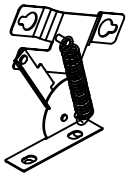 x1	16 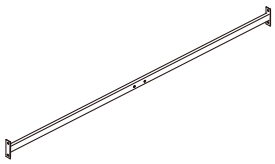 x 1	
17 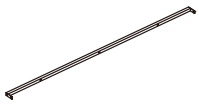 x 1	18 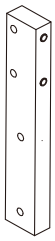 x 1	19  x 1	20 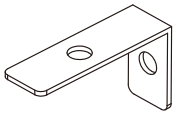 x 10	21 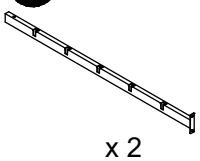 x 2
22 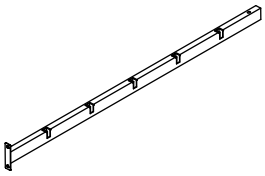 x 2	23  x 2	24  x 2	25  x 2	26 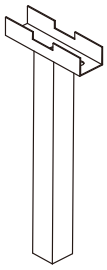 x 1
27 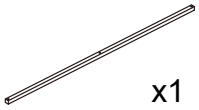 x1	29 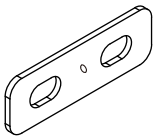 x 2			

Part list

N652P537423W

A	B	C	D	E	F	G	H	I	J	K	L	N	O	P	Q	R	S
 x 11	 x 11	 M5x30 x 12	 M8x45 x 5	 M8x35 x 14	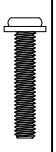 M8x30 x 3	 M8x12 x 38	 M6x10 x 7	 3.5x12mm x 2	 x 1	 x 2	 x 4	 M4 x 1	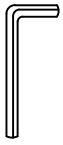 M5 x 1	 x 1	 M3 x 1	 x 1	 M6X15 x 6

T	U
 M8X10 x 8	 M5x50 x 4

Step 1:

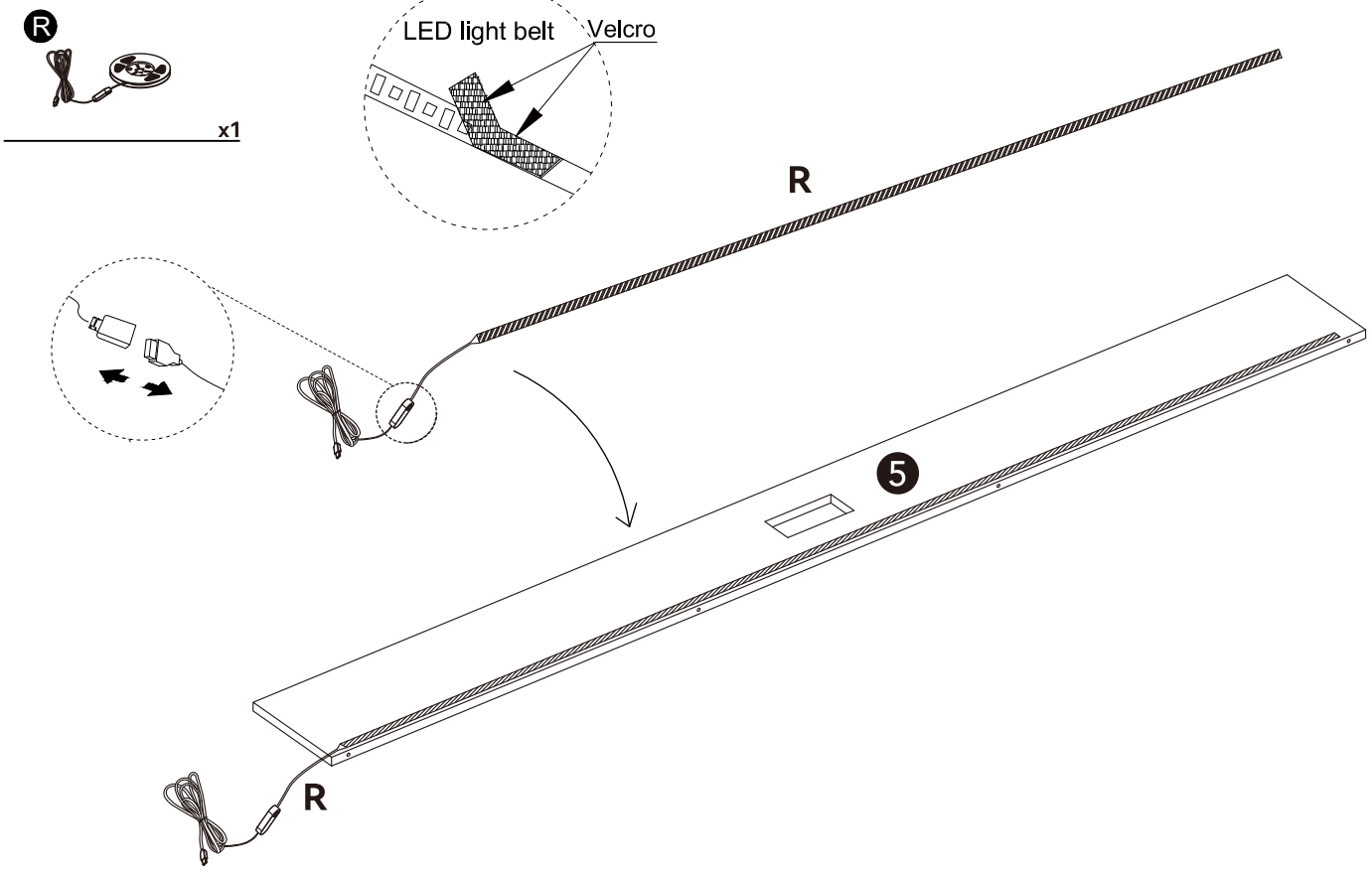

Step 2:

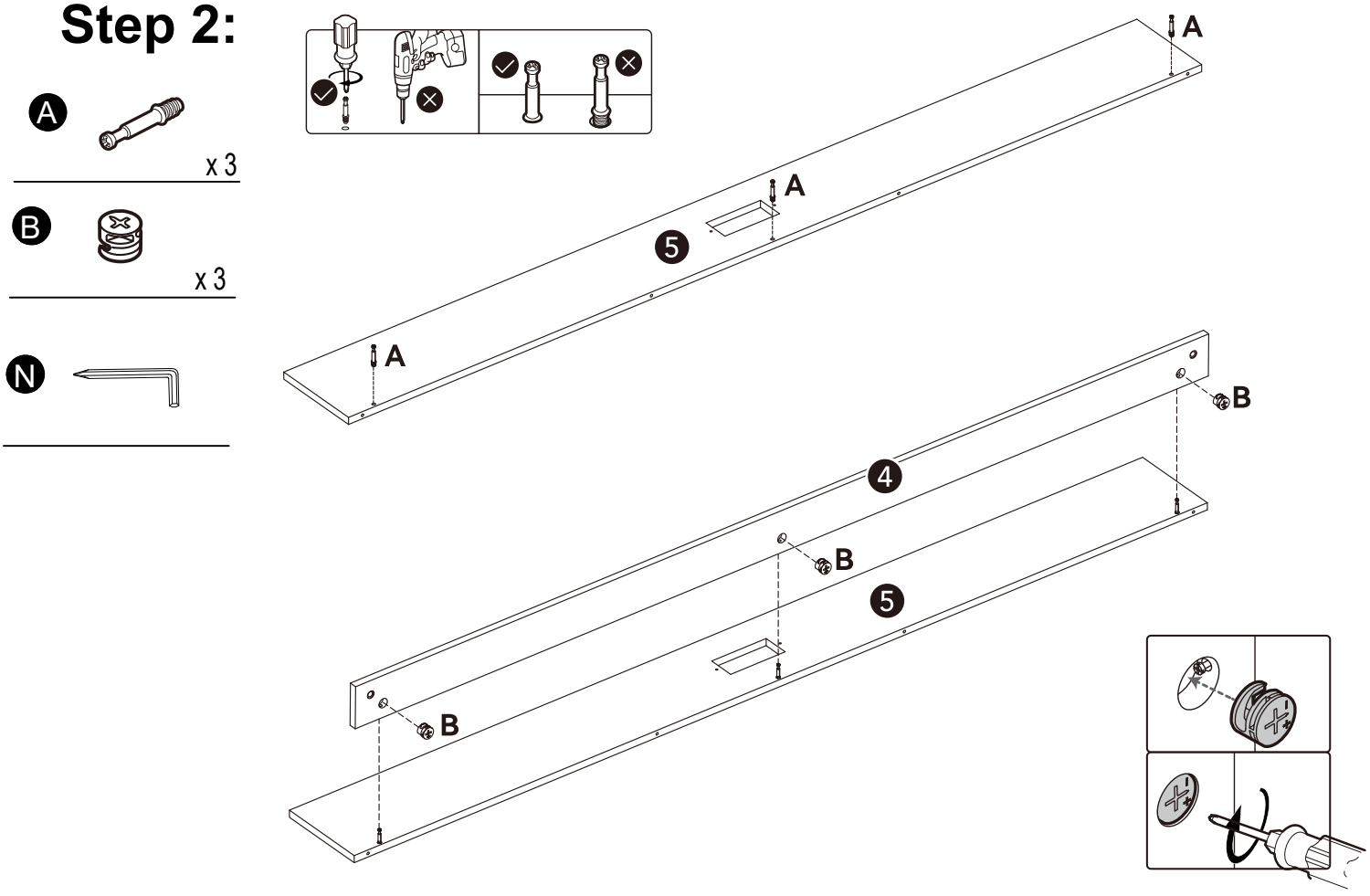

Step 3:

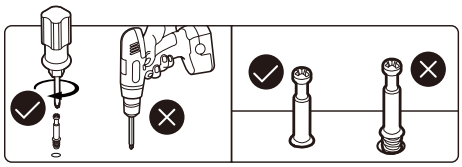

Ⓐ 

x 4

Ⓝ 

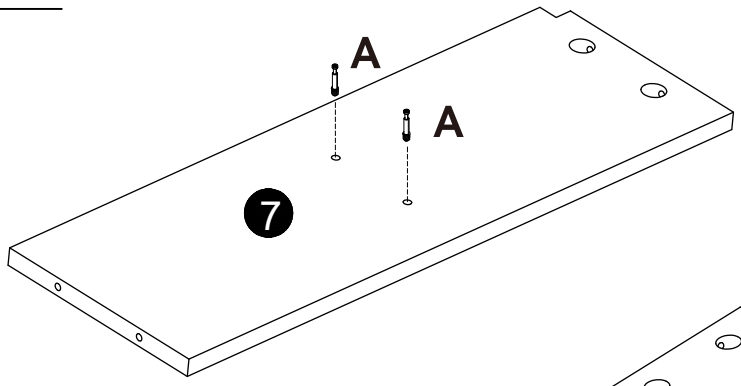

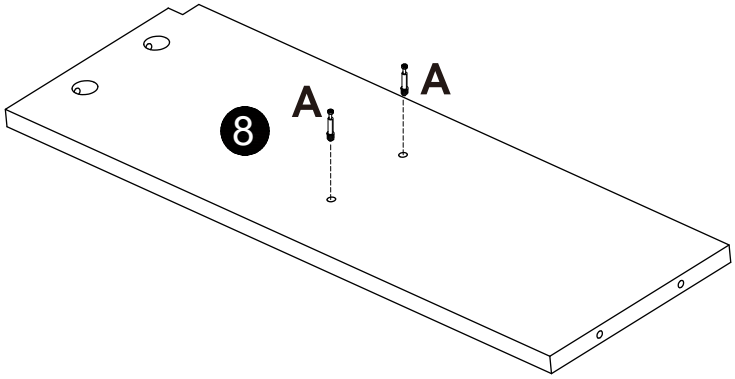

Step 4:

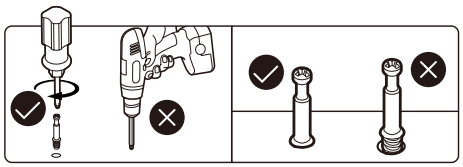

Ⓐ 

x 4

Ⓑ 

x 4

Ⓝ 

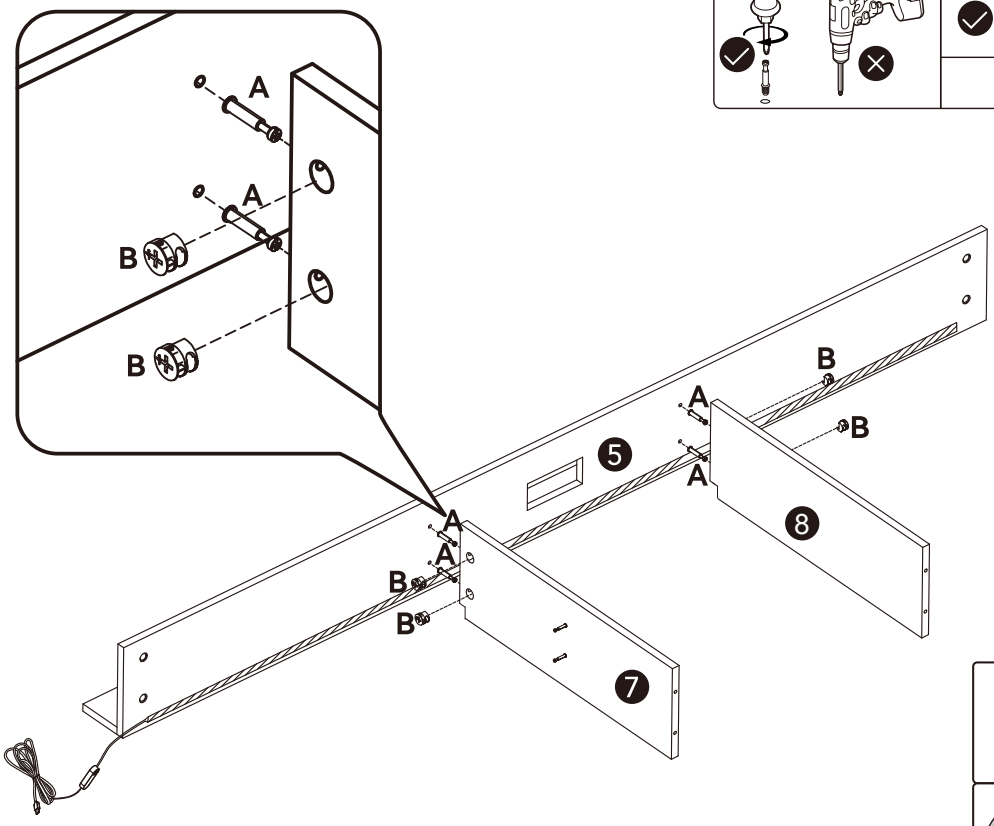

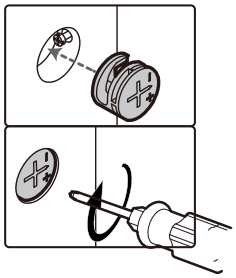

Step 5:

B x 4

N x 1

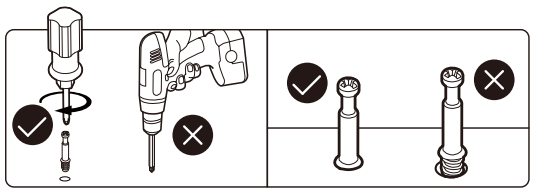

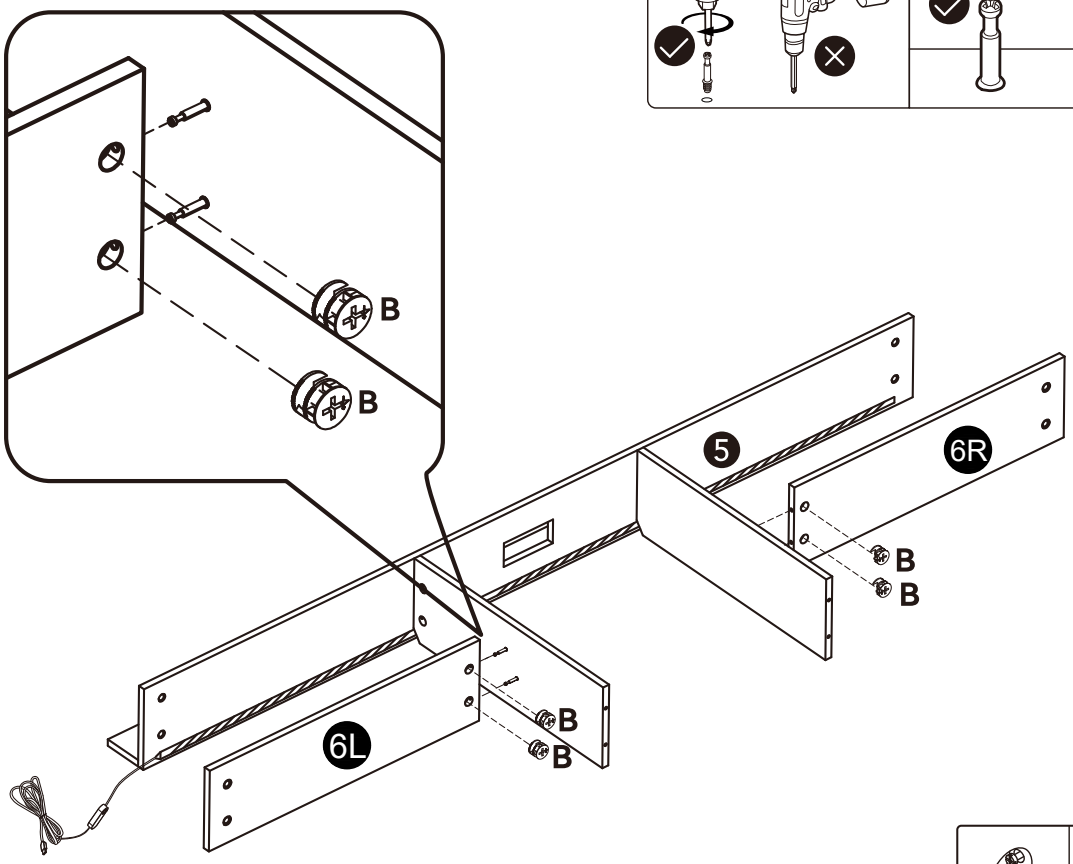

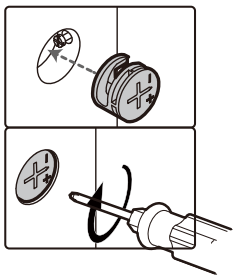

The side holes of the No. 6 board
need to be installed facing downward.

Step 6:

U x 4

Q x 1

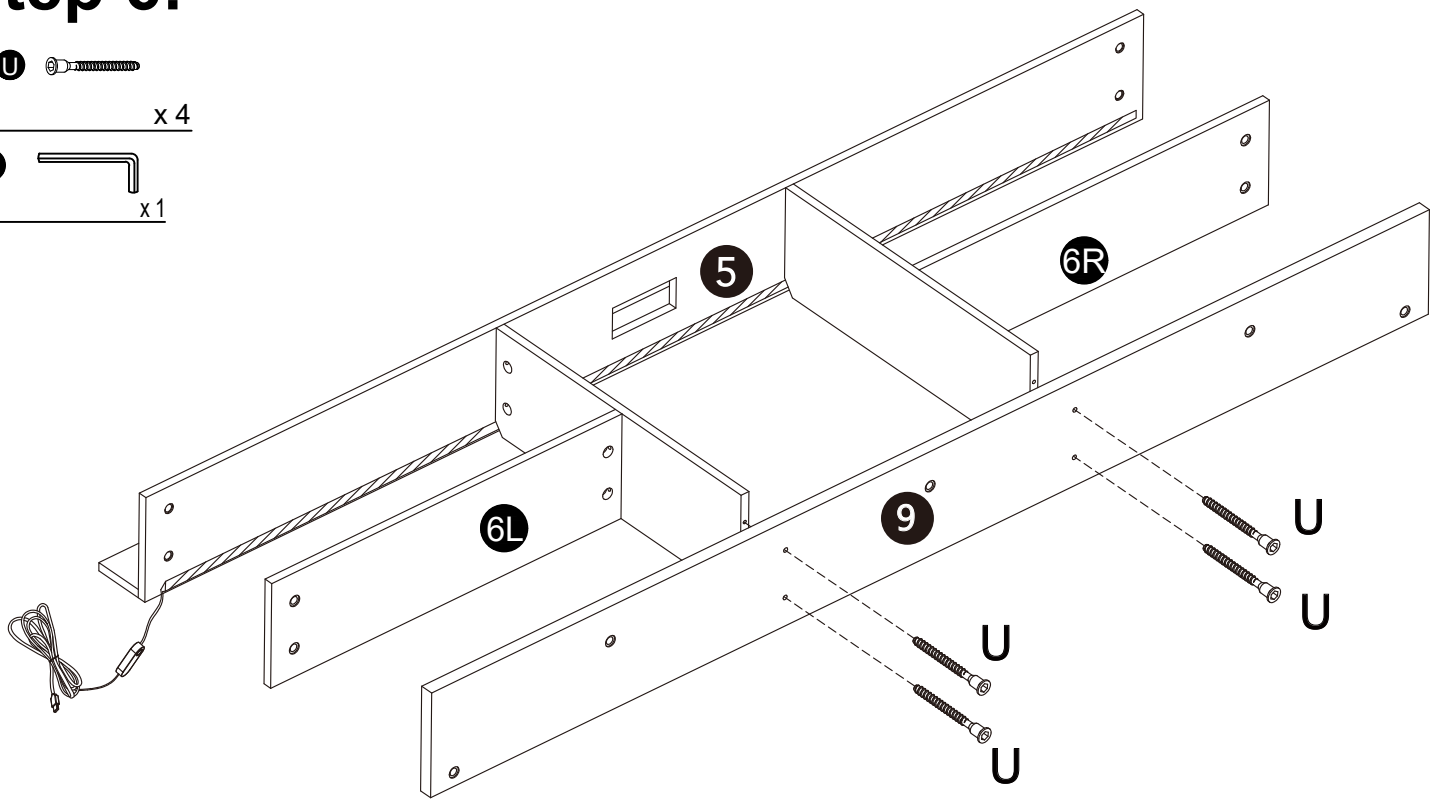

Step 7:

F

x 3

O

x 1

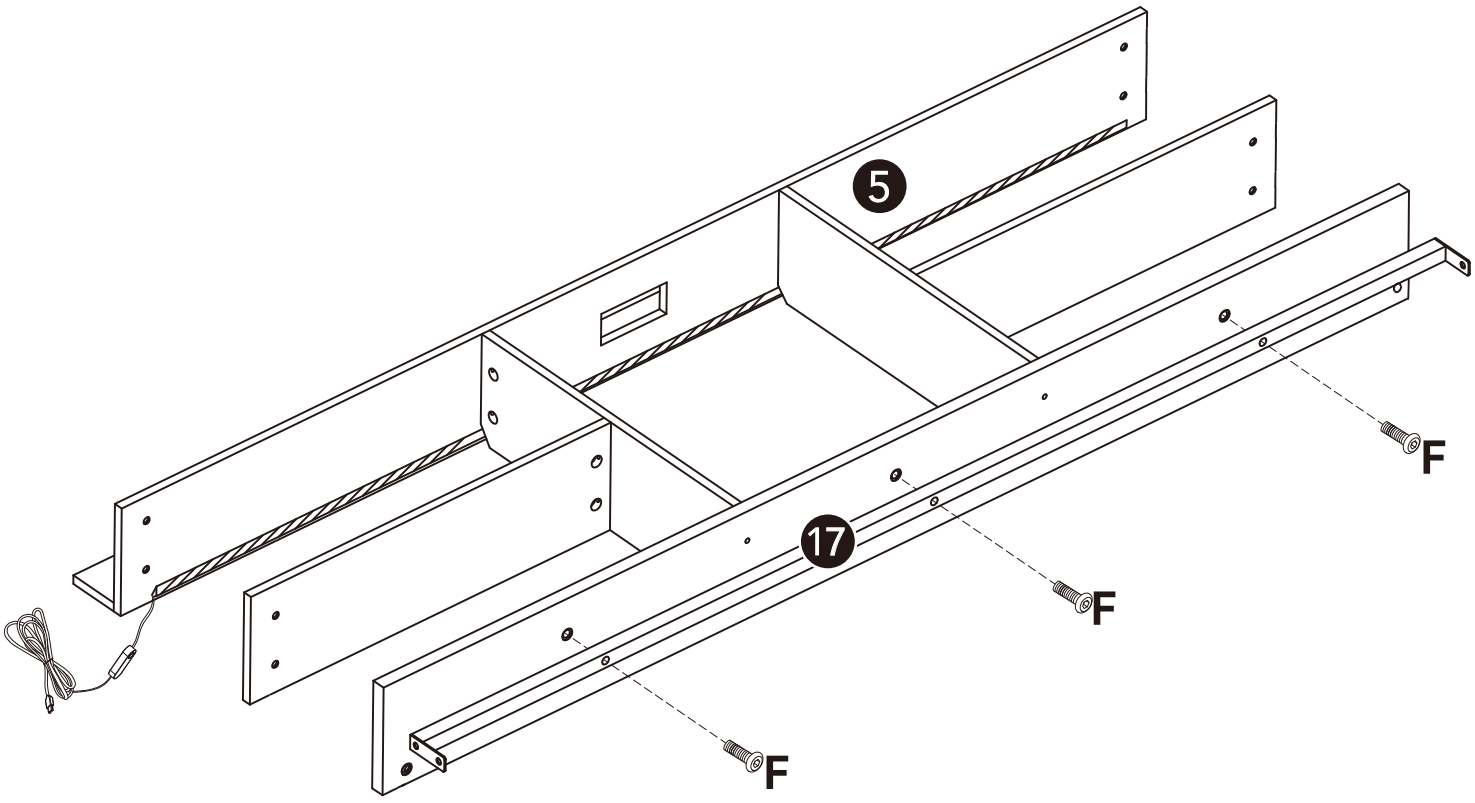

Step 8:

G

x 10

E

x 8

20

x 10

O

x 1

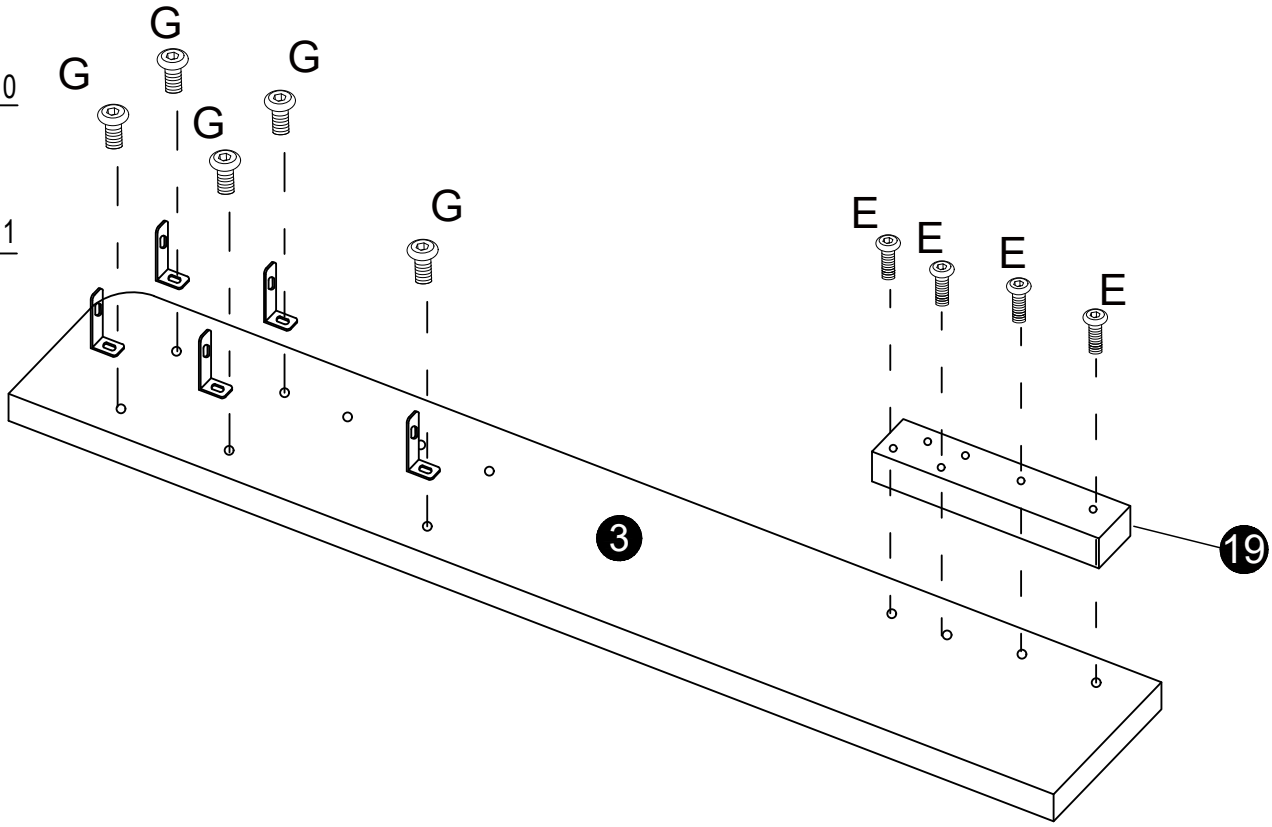

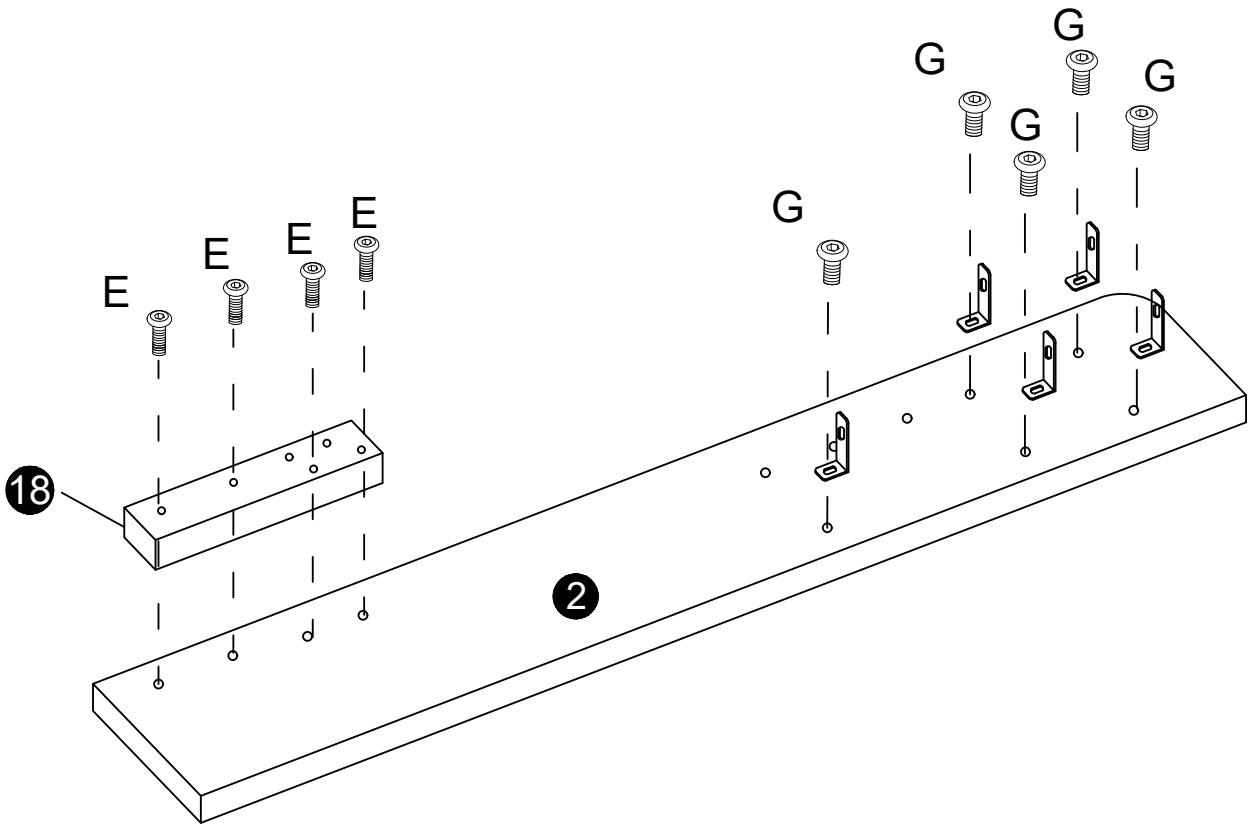

Step 9:

G

x 4

T

x 8

O

x 1

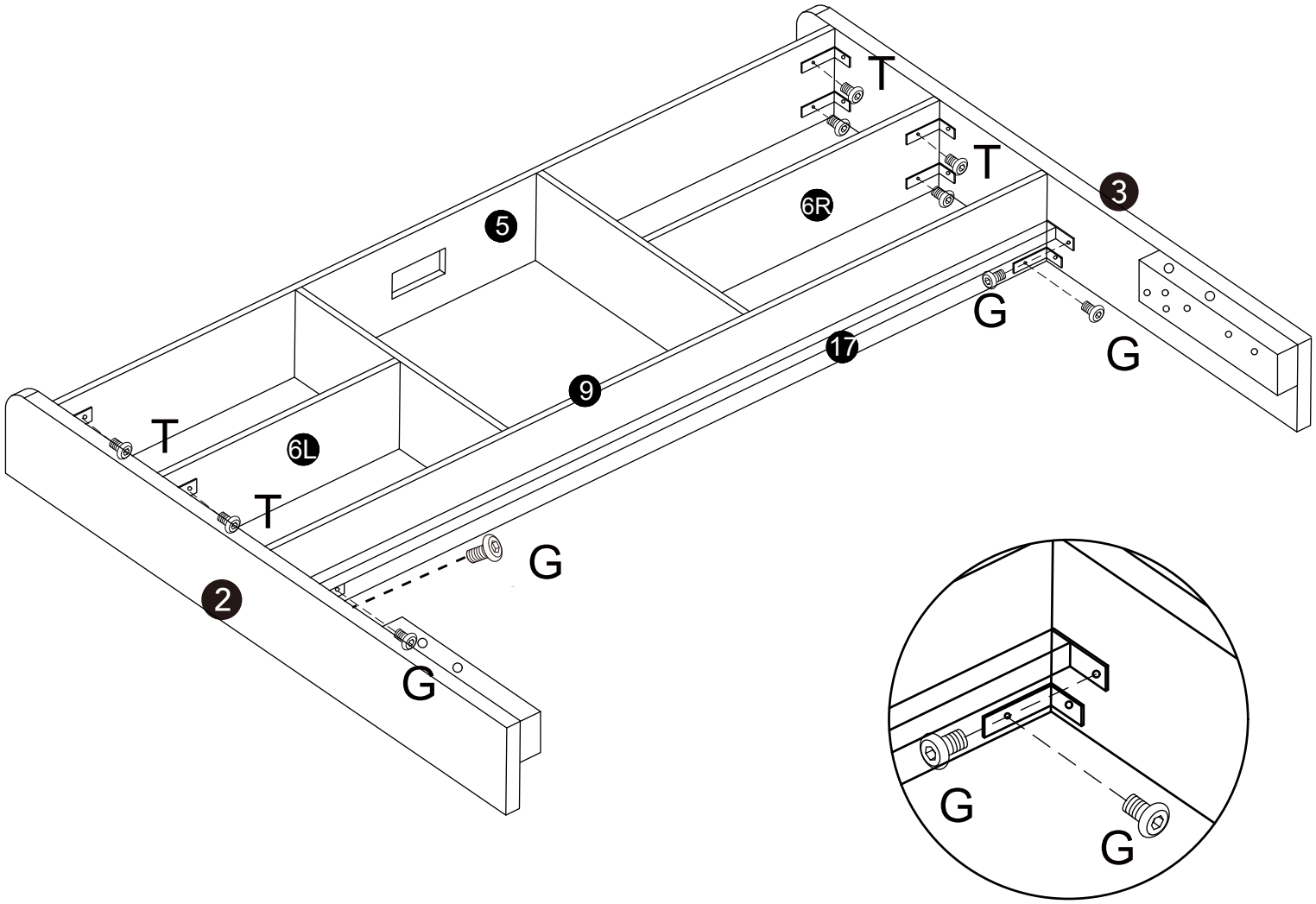

Step 10:

G



x 4

O

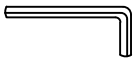

x 1

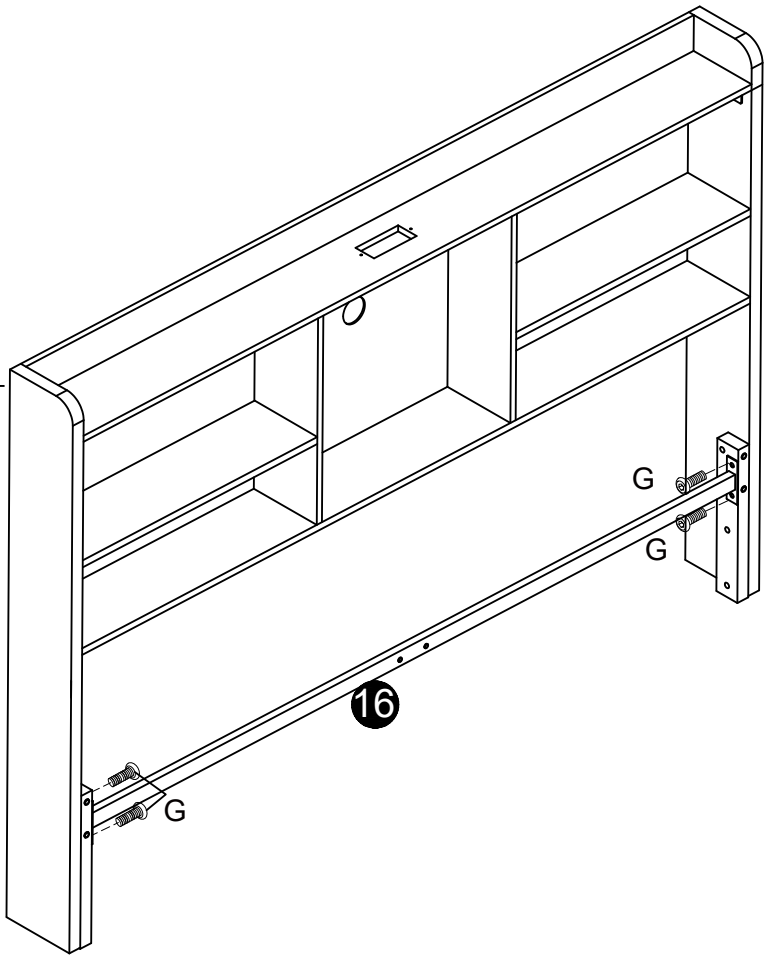

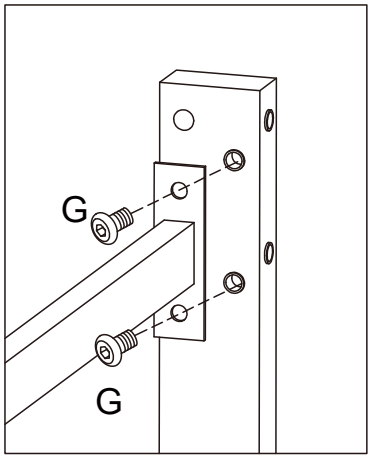

Step 11:

C

x 12

H



x 2

S



x 6

29

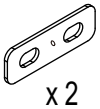

x 2

N



Q

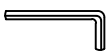

x 1

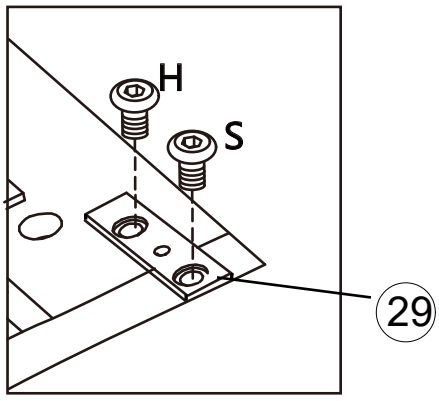

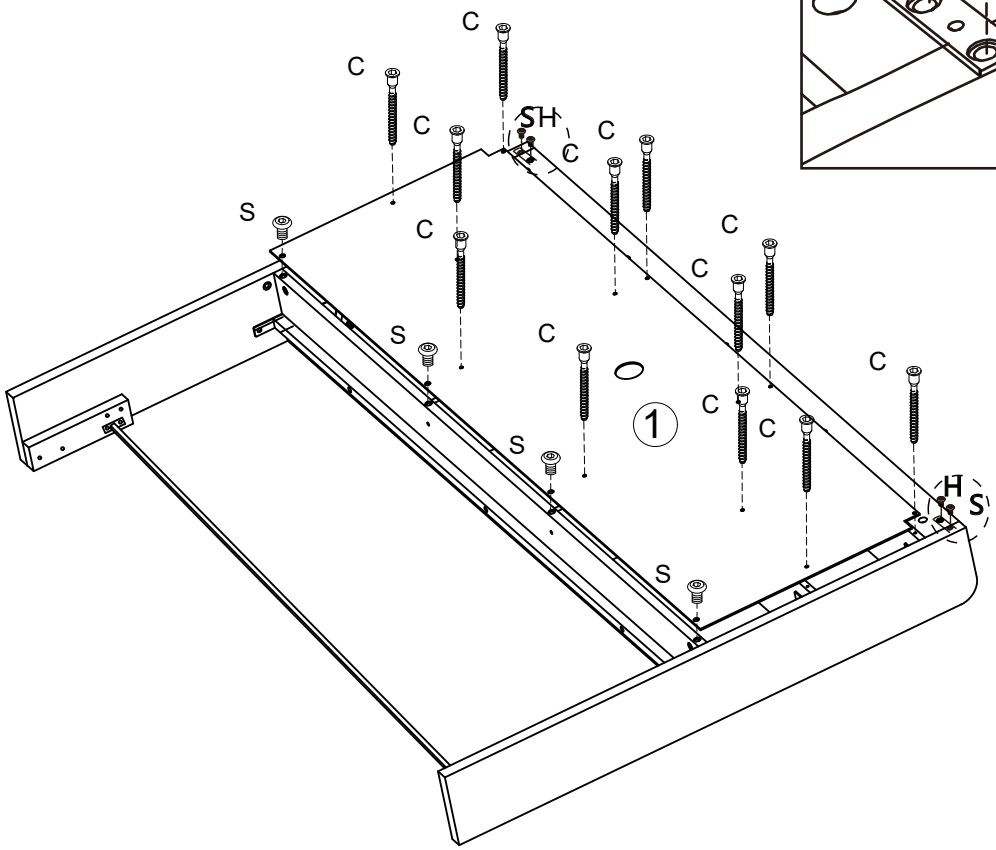

Step 12:

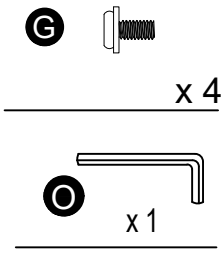

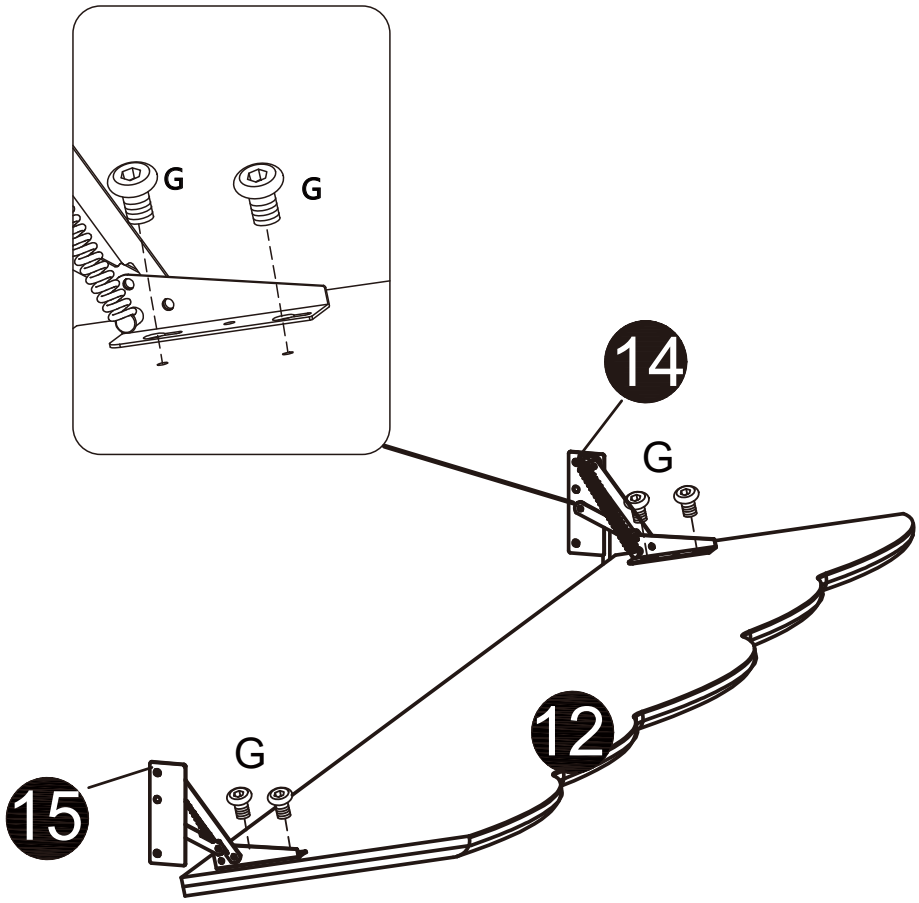

Step 13:

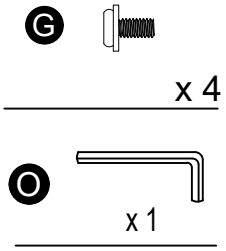

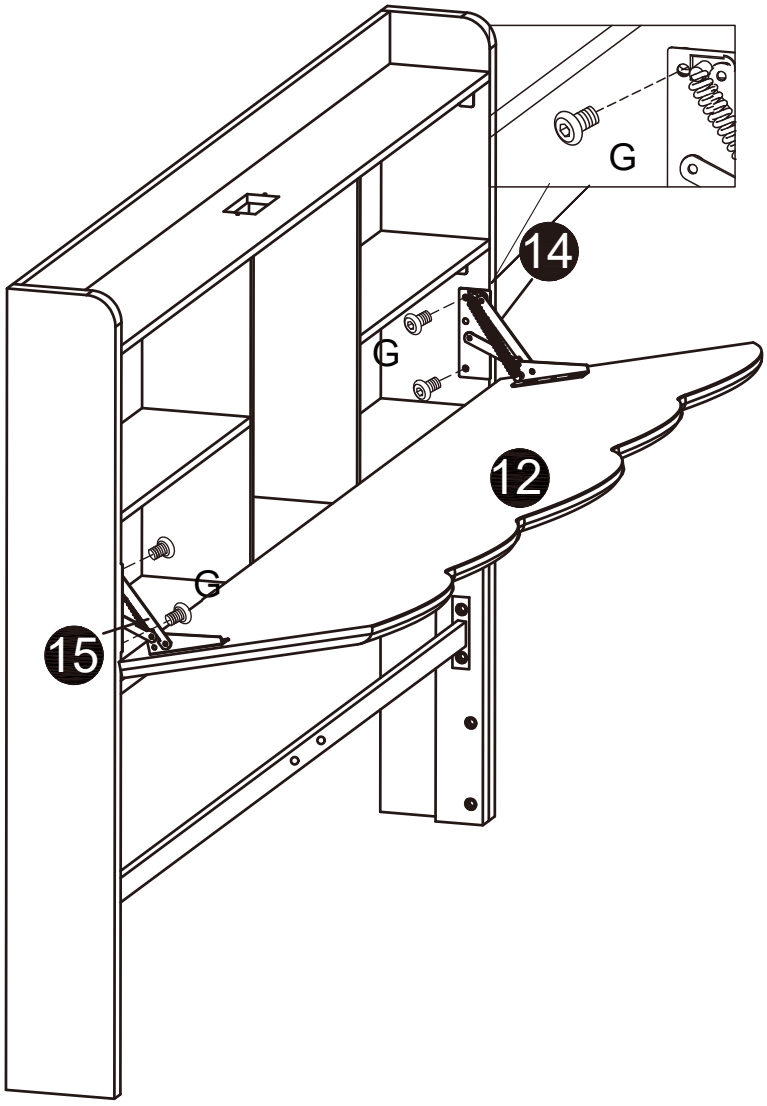

Step 14:

D



x 4

O



x 1

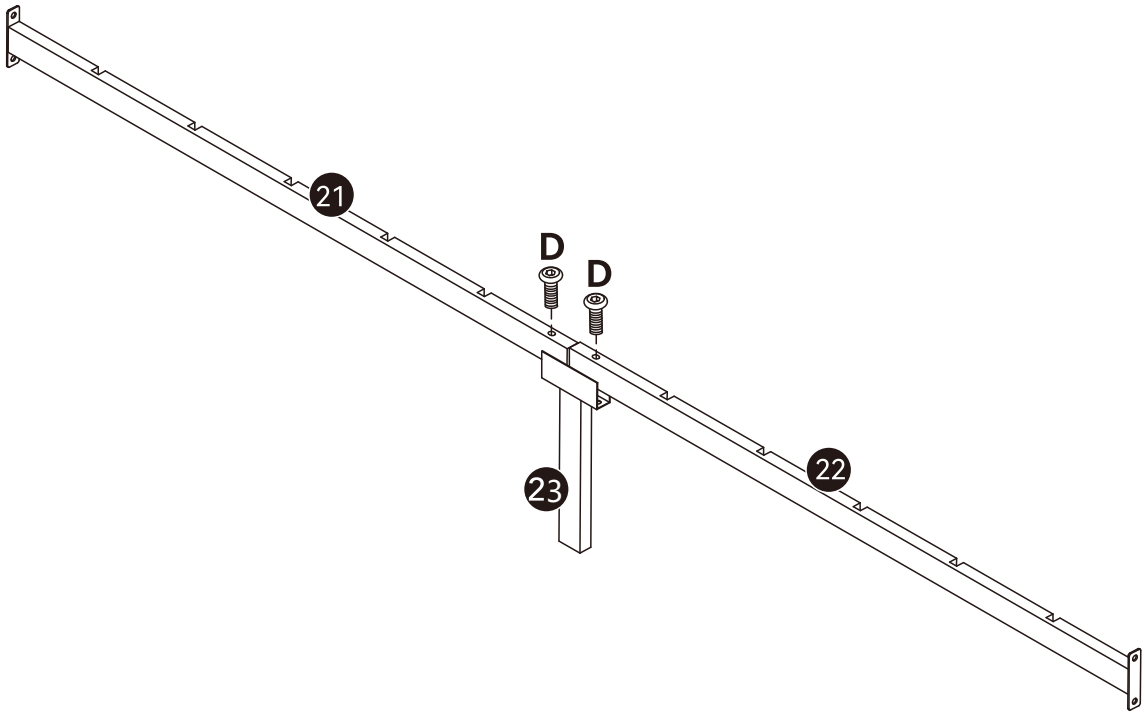

x2

Step 15:

E



x 4

O

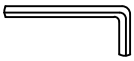

x 1

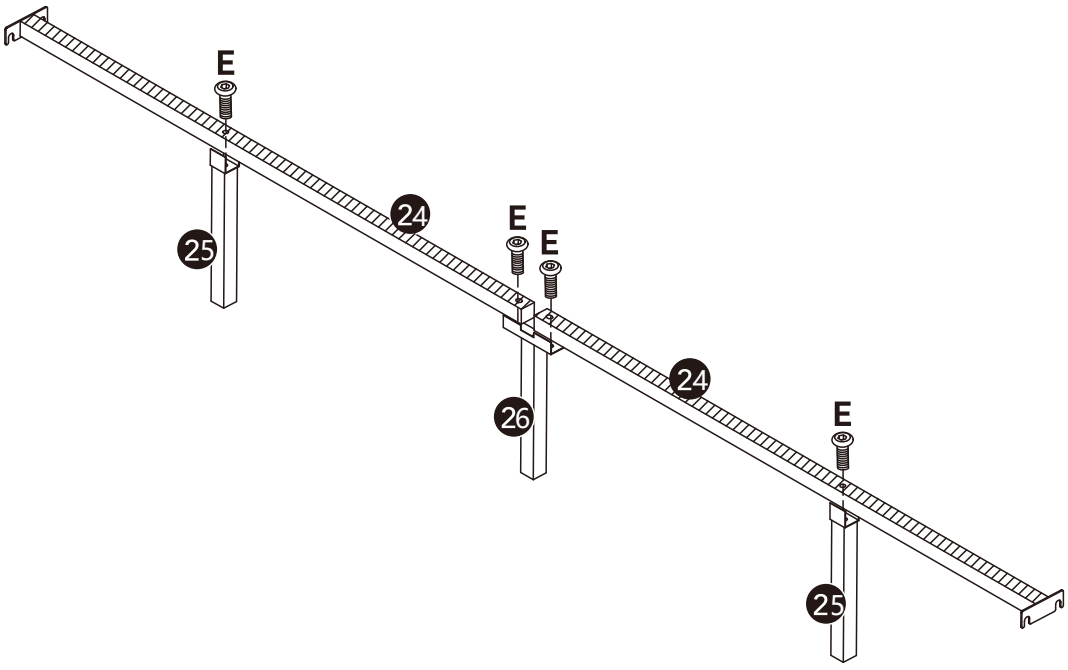

Step 16:

G x 8

O x 1

%70

Do not fully tighten the screws at this step.

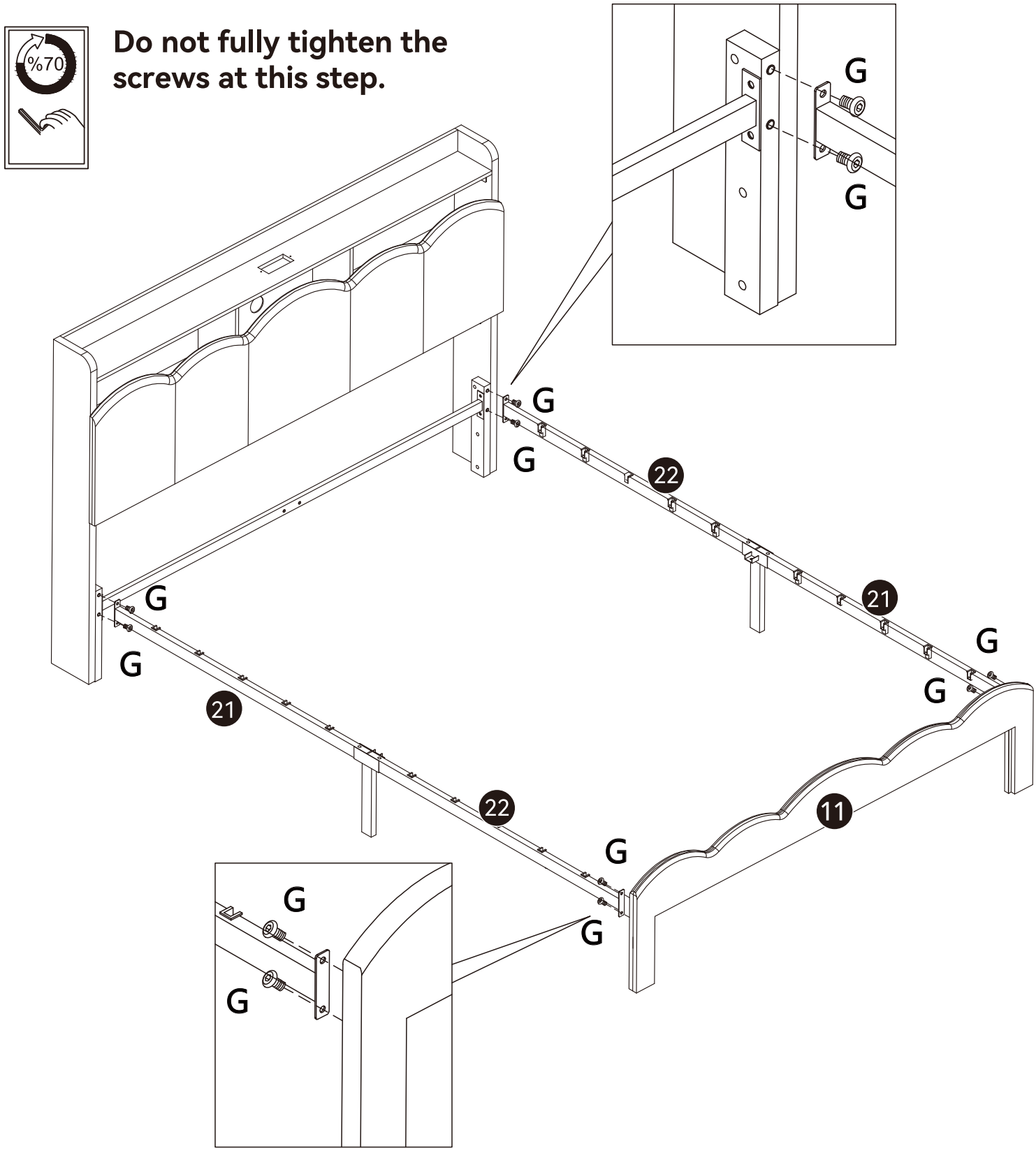

Step 17:

D x 1

E x 2

G x 4

O x 1



Fully tighten all screws.

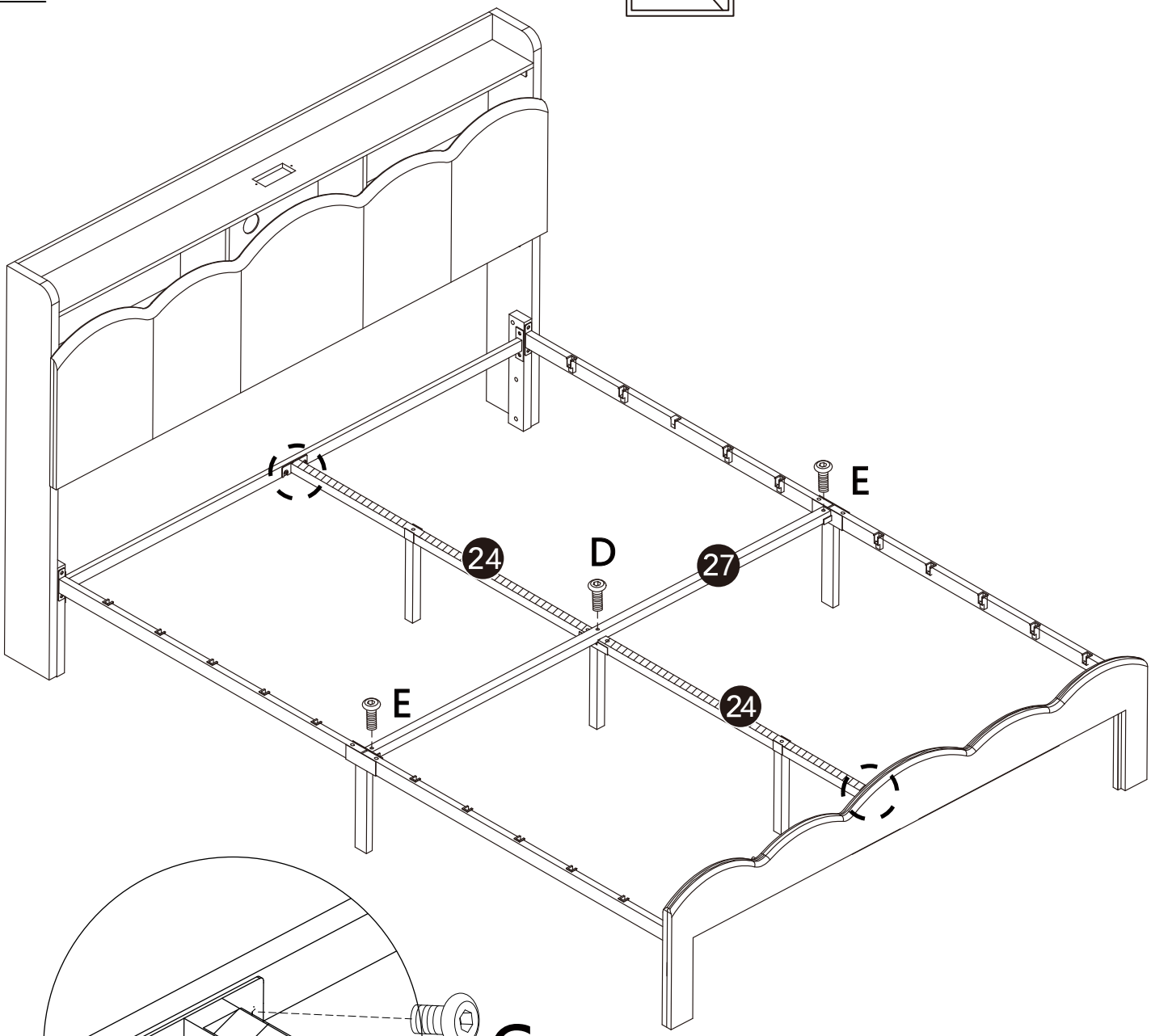

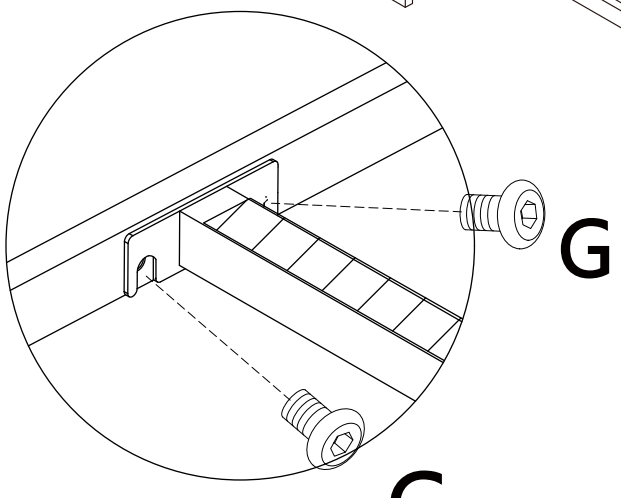

Step 18:

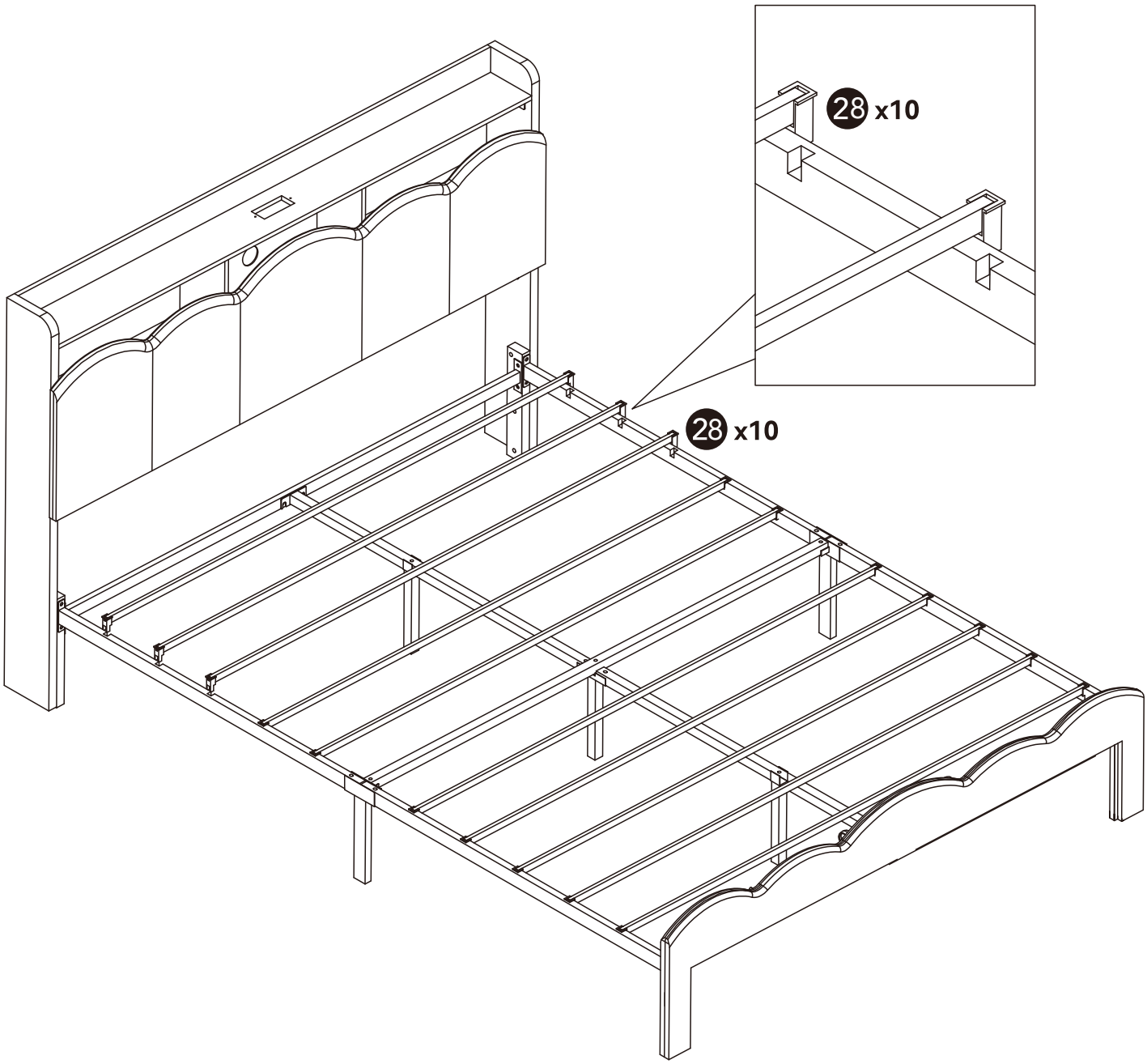

Step 19:

K x 2

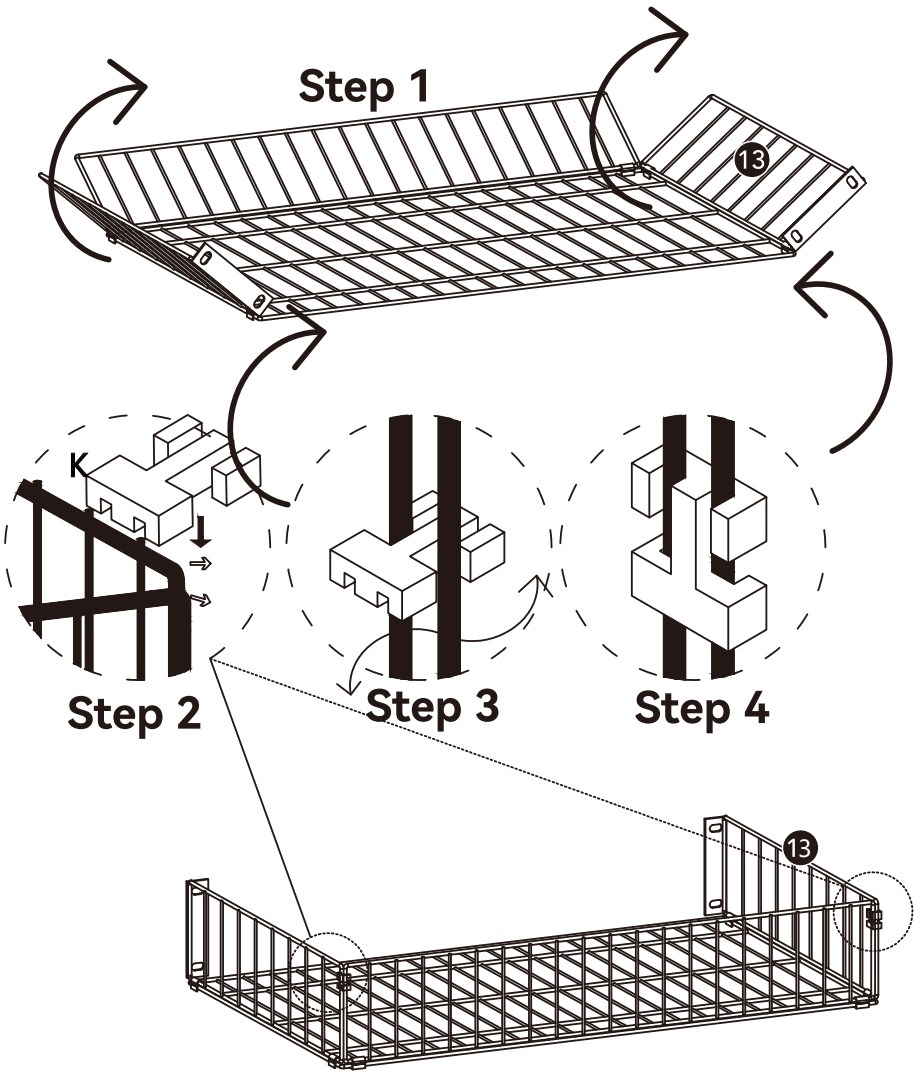

Step 20:

H x 5

J x 1

N x 1

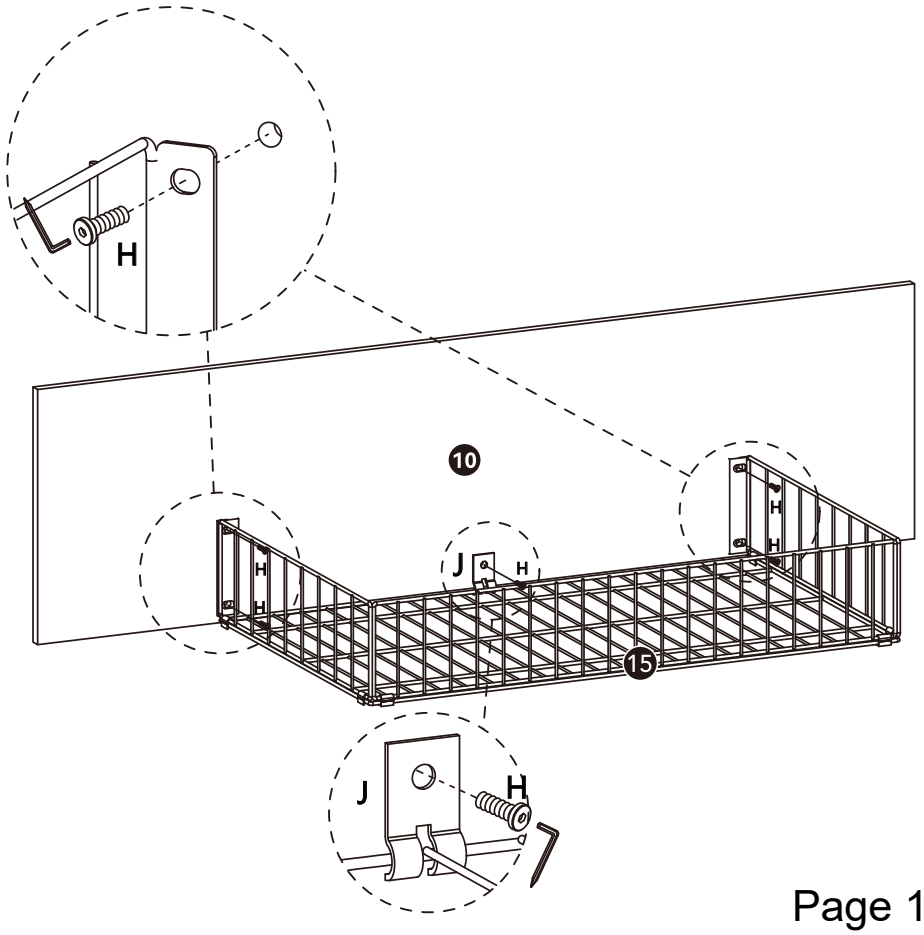

Step 21:

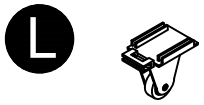

x 4

Clamp the wire with the opening of the front end of the wheel and press down to tighten the wire.

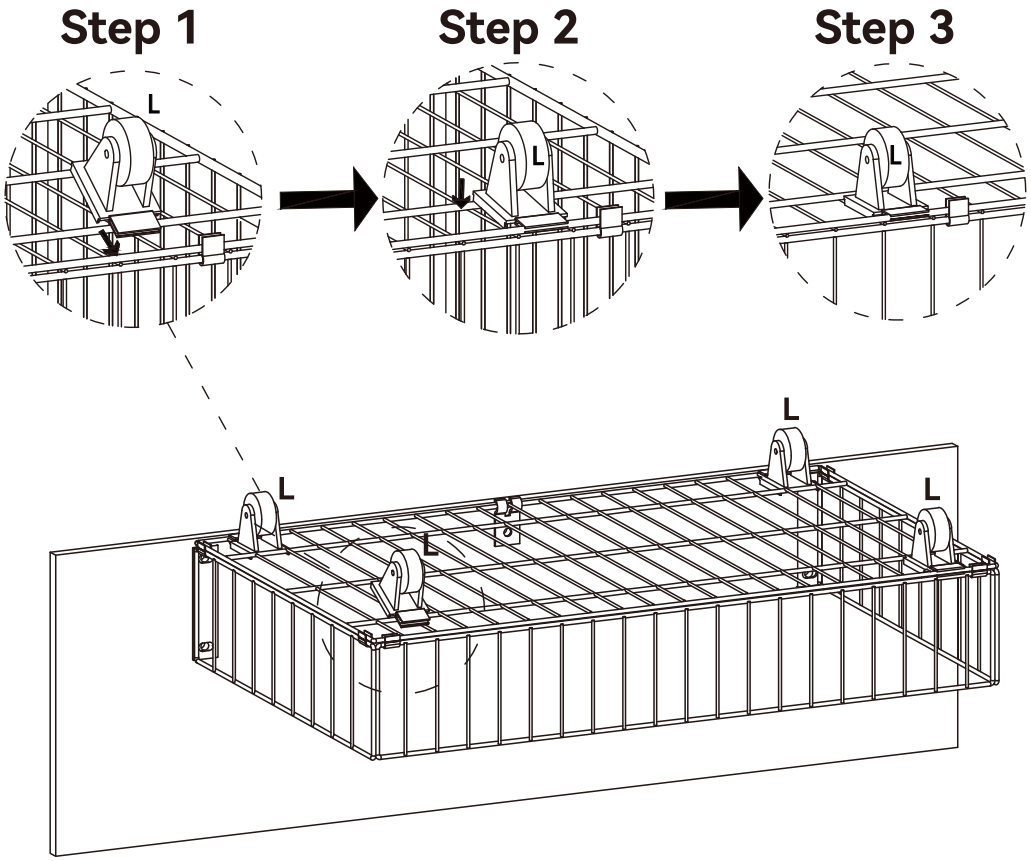

Step 22:

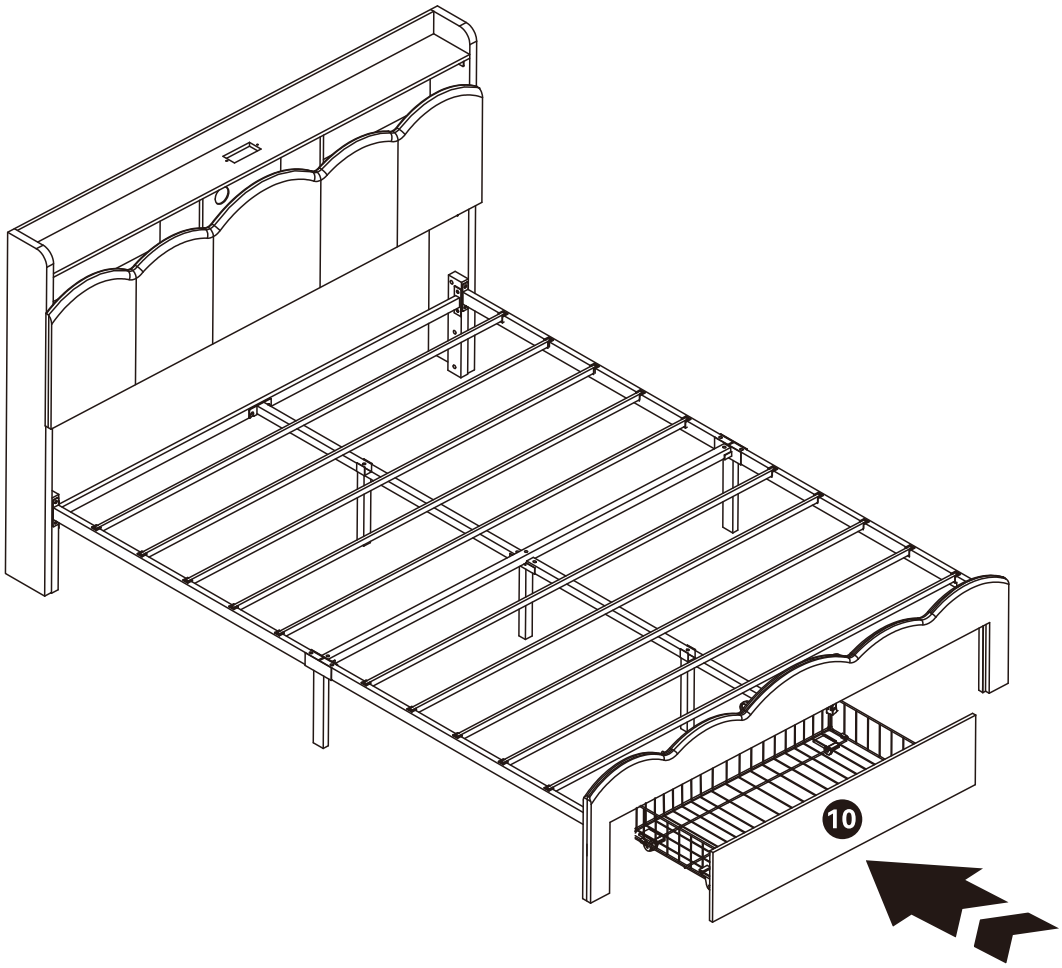

Step 23:

I x 2

P x 1

N x 1

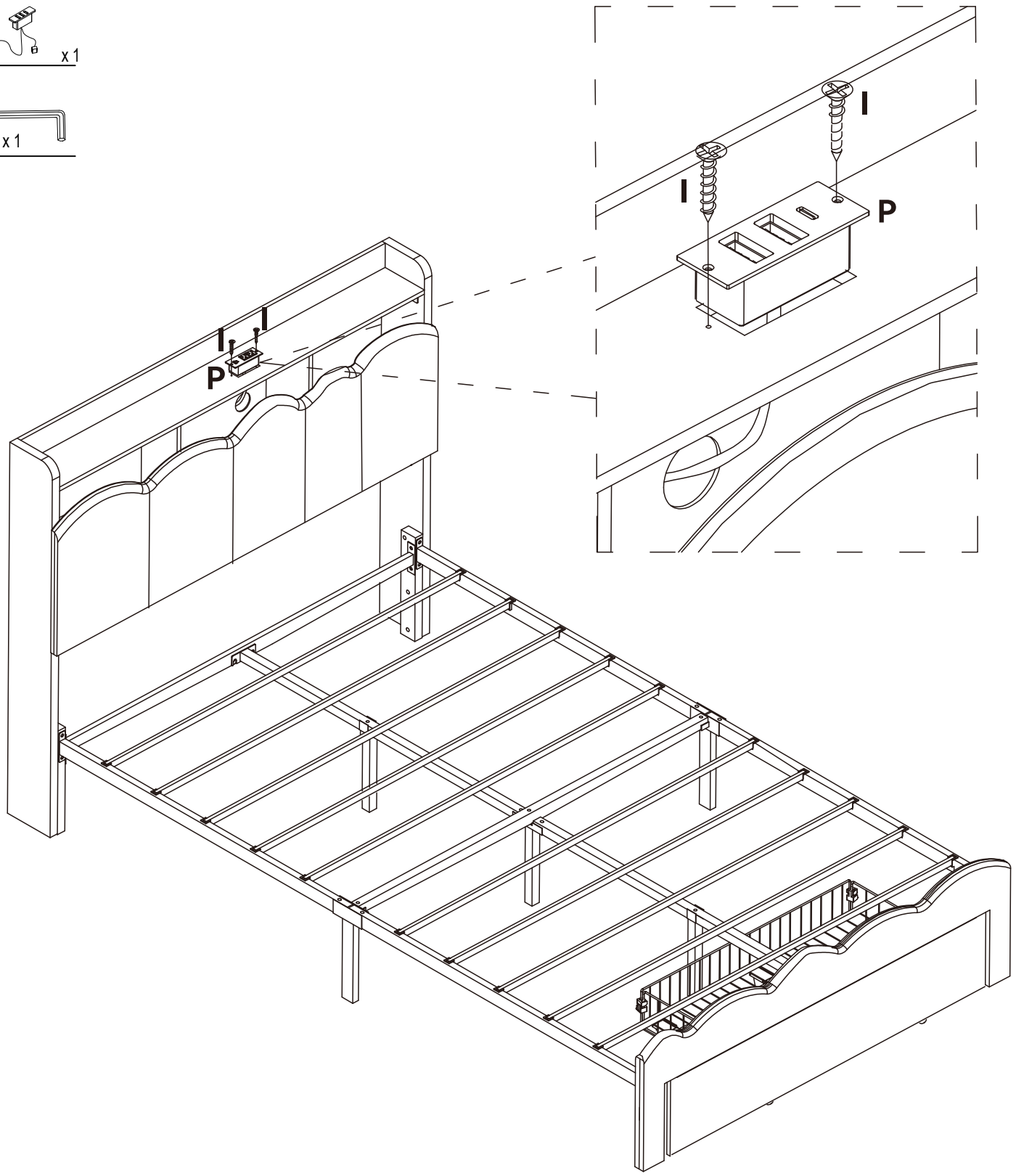

Step 24:

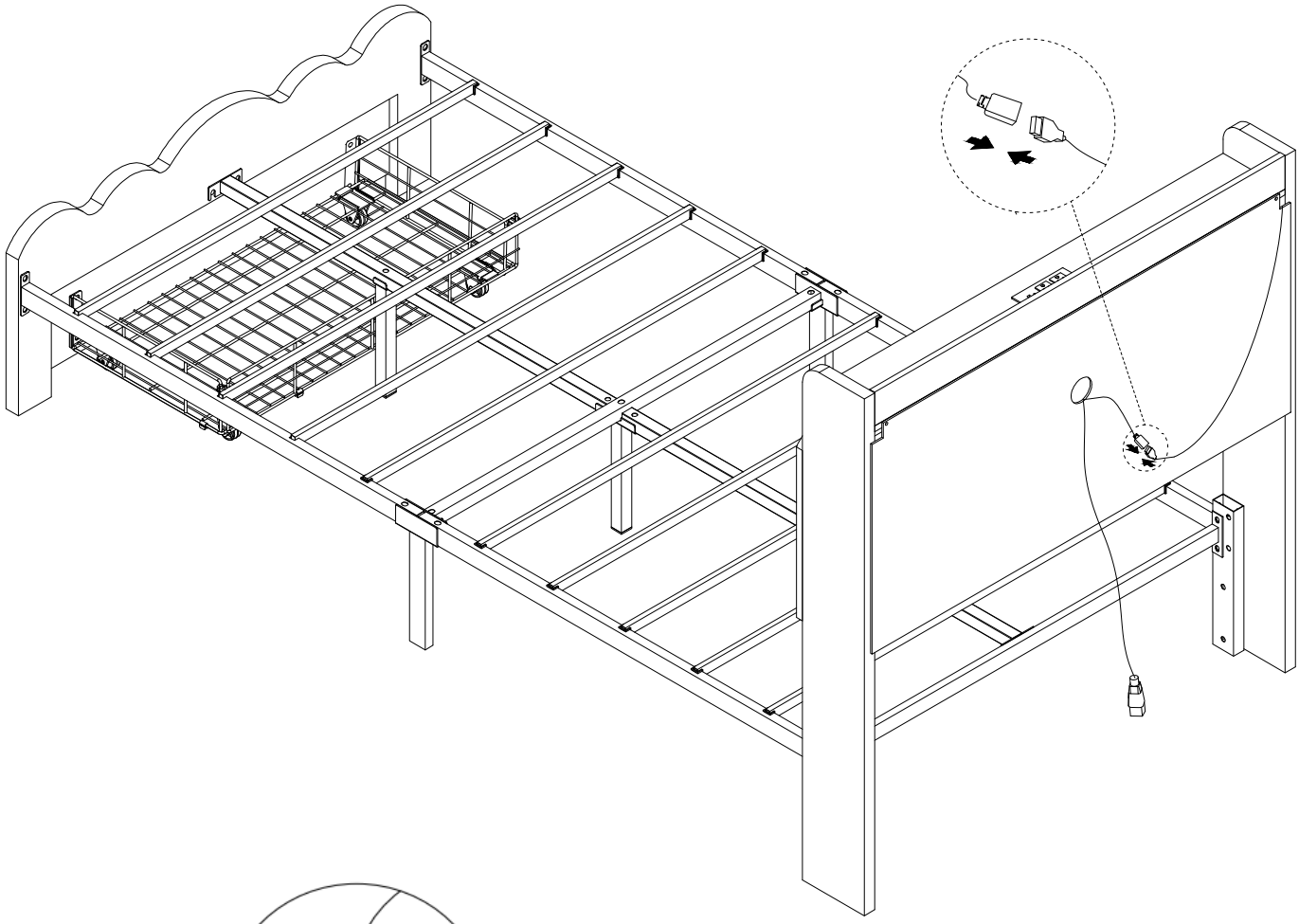

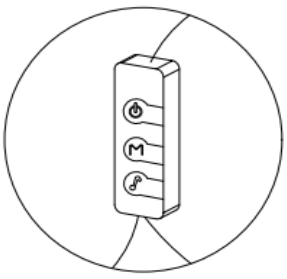

LED lamp button control.

Verification of compliance Verification of compliance Verification of compliance Verification of compliance

Verification of Compliance

Verification No.:	MK25070091P01-E01
Name and address of Applicant:	**Shenzhen CWG Technology Co., Ltd** 3/F, Building A, Yongshenghui Industrial Park, Chuangye Road, Shiyan Street, Bao'an District, Shenzhen
Name and address of Manufacturer	**Shenzhen CWG Technology Co., Ltd** 3/F, Building A, Yongshenghui Industrial Park, Chuangye Road, Shiyan Street, Bao'an District, Shenzhen
Product name:	**LED Strip**
Rated:	5V ⎓
Product model(s):	CWG-5050RGB-60D-5V, CWG-5050RGB-30D-12V, CWG-5050RGB-18D-12V, CWG-5050RGB-60D-24V, CWG-5050RGB-60D-12V, CWG-5050RGB-30D-5V, CWG-5050RGB-18D-5V, CWG-5050-60D-12V, CWG-5050-30D-12V, CWG-5050-60D-24V, CWG-HC5050RGB-60D-12V, CWG-HC5050RGB-30D-12V,CWG-HC5050RGB-60D-24V, CWG-HC5050-60D-12V, CWG-HC5050-30D-12V, CWG-HC5050-60D-24V, CWG-HC5050RGB-30D-5V, CWG-HC5050RGB-60D-5V, CWG-HC5050RGB-144D-5V, CWG-2835-60D-12V, CWG-2835-120D-12V, CWG-2835-60D-24V, CWG-2835-120D-24V, CWG-2835-60D-5V, CWG-2835-120D-5V
Product trademark:	创唯光

This verification confirms that the product meets the requirements of the following standard.
The conformity was demonstrated based on following standard(s) listed by European Commission as harmonized with EMC Directive 2014/30/EU.

EN IEC 55015:2019+A11:2020
EN IEC 61547:2023

The verification has been carried out in accordance with individual rules and conditions agreed with the applicant. Evaluation has been carried out in accordance with:

Test report(s) No.:	MK25070091P01-E01
Test conducted by:	TMC Testing Services (Shenzhen) Co., Ltd.
Verification issue date:	July 17, 2025

Notes:
This verification refers to the above mentioned product and its conformity in regards of above mentioned standard(s) was proven on test sample.
This verification does not imply meeting all essential requirements, assessment of the series-production or any other restricted Notified Bodies conformity assessment procedure appropriate for the product.
This verification holder shall use this verification in connection to verification of conformity and technical data relevant for the product the verification was issued.

TMC Testing Services (Shenzhen) Co., Ltd.
t:86-755-86642861 cert@tmc-lab.com www.tmc-lab.com
1st Floor, Block A1, Zone A, Xinshidai Gongrong Industrial Park, No. 2, Shihuan Road, Shiyan Street, Baoan District, Shenzhen, China

Bauart geprüft TMC Access to global market Product Safety

Lab
Vivian Jiang

VERIFICATION OF CONFORMITY

Registration No.	:	**WTN25D04079446**
Reference No.	:	**WTN25D04079446Z**
Applicant	:	**Guangdong Zhangong Electric Technology Co., Ltd.**
Address	:	**Room 701, Building 29, Shunde Zhifu Park, No.8, 2nd Ring Road, Gaozan village committee, Xingtan town, Shunde District, Foshan City, Guangdong Province**
Manufacturer	:	**The same as above**
Address	:	**The same as above**
Product	:	**MountableUSB Hub/USBCHARGER**
Model No.	:	**ZG-USB-O01A, ZG-USB-Y01A, ZG-USB-O02A, ZG-USB-Y02A, ZG-USB-O01B, ZG-USB-Y01B, ZG-USB-O02B, ZG-JJ/12A/15A:**
Technical data		**See model list**

Test Standards:

EN IEC 61558-1:2019

EN 61558-2-16:2009+A1:2013

The above product has been tested by us with the listed standards and found in compliance with the European Directive LVD 2014/35/EU. It is possible to use CE marking to demonstrate the compliance with this LVD Directive.

Safety of power transformers, power supplies, reactors and similar products - Part 1: General requirements and tests
Safety of transformers, reactors, power supply units and similar products for supply voltages up to 1100 V - Part 2-16: Particular requirements and tests for switch mode power supply units and transformers for switch mode power supply units

The referred test report(s) show that the product complies with standard(s) recognized as giving presumption of compliance with the essential requirements in the above mentioned EU Directive. Other relevant Directives have to be observed.

After preparation of the necessary technical documentation as well as the EU Declaration of Conformity,the CE marking as shown below can be affixed on the equipment under the sole responsibility of the manufacturer.

CE

Deval qin

Manager:Deval Qin
Date: 2025-5-30

The statement is based on a single evaluation of the sample of above mentioned product. It does not imply an assessment of the whole production.

Waltek Testing Group Co., Ltd.

Hotline:400-840-2288 **E-mail:info@waltek.com.cn**

Http://www.waltek.com.cn

Ver.03. 26.09.2024, WALTEK is registered trademark. Utilisation and application requires prior approval.

VERIFICATION OF CONFORMITY

Attachment

Model list

Reference No.: WTN25D04079446Z

Model List:

Product name	Model name	Differences
MountableUSB Hub/USBCHARGER	ZG-USB-O01A, ZG-USB-O01B	Input: AC 100V-250V,50/60Hz Type-C Output: 5Vdc 2.1A USB Output: 5Vdc 2.1A Type-C+USB Output: 5Vdc 2.1A EU plug
	ZG-USB-O02A, ZG-USB-O02B	Input: AC 100V-250V,50/60Hz USB Output: 5Vdc 2.1A USB+USB Output: 5Vdc 2.1A EU plug
	ZG-USB-Y01A, ZG-USB-Y01B	Input: AC 100V-250V,50/60Hz Type-C Output: 5Vdc 2.1A USB Output: 5Vdc 2.1A Type-C+USB Output: 5Vdc 2.1A UK plug
	ZG-USB-Y02A, ZG-JJ/12A/15A	Input: AC 100V-250V,50/60Hz USB Output: 5Vdc 2.0A USB+USB Output: 5Vdc 2.0A UK plug

======End of Attachment======

Waltek Testing Group Co., Ltd.

Hotline:400-840-2288 **E-mail:info@waltek.com.cn**

Http://www.waltek.com.cn

Ver.03. 26.09.2024, WALTEK is registered trademark. Utilisation and application requires prior approval.