ASSEMBLY INSTRUCTION

Palmara Outdoor Dining Table

Components



A
X1

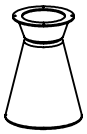

B
X1

Hardware List				
a		Screw	8X25mm	4pcs
b		Spring Washer	∅8	4pcs
c		Flat Gasket	∅8	4pcs
d		Allen Key	8mm	1pc

ASSEMBLY INSTRUCTION

Step1

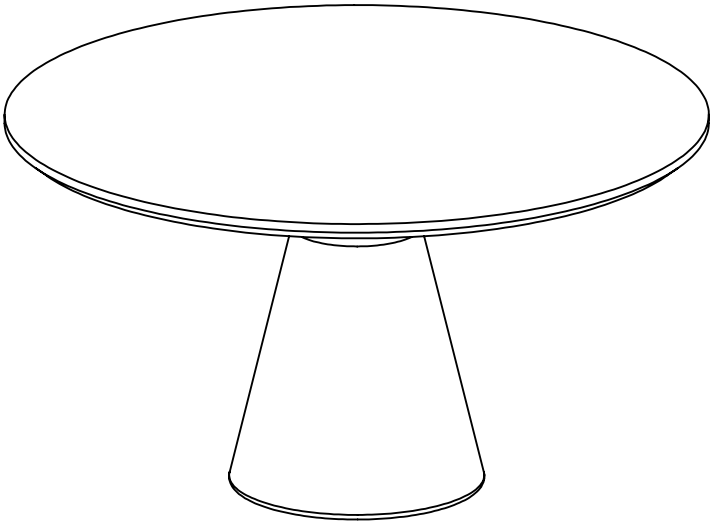

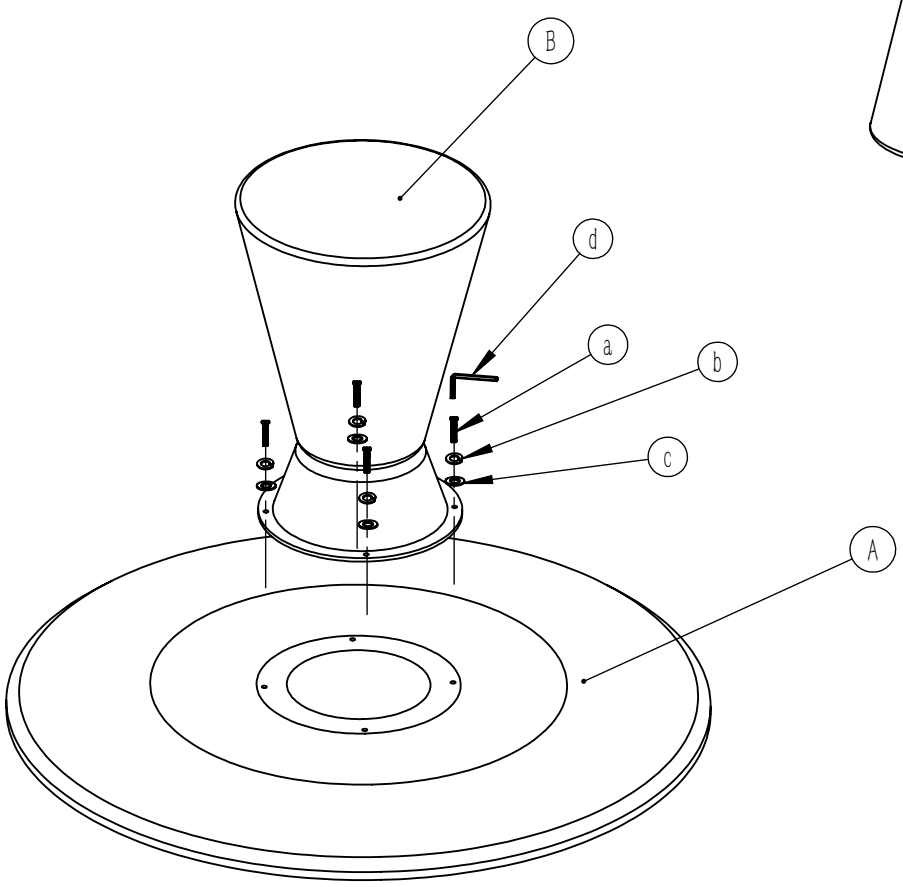

Adjusting Floor Levelers

Check for Stability - Place the furniture in its final position on a level surface. If it wobbles or doesn't sit evenly, the floor levelers need adjusting.

Locate the Levelers - These are small adjustable feet found at the bottom corners of your furniture.

Adjust as Needed - Using your hand or a wrench, turn the levelers clockwise to raise or counterclockwise to lower the furniture. Make small adjustments and check stability after each turn

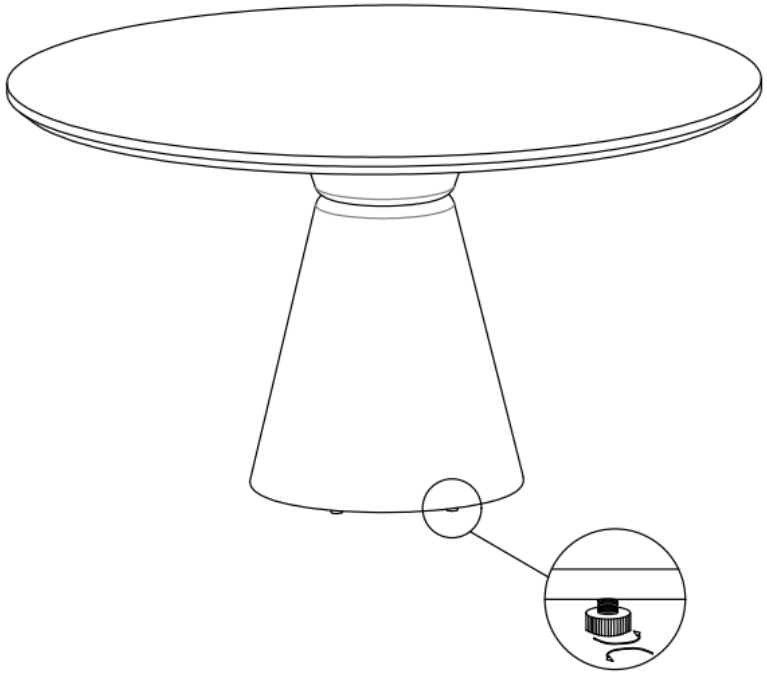

f you need further adjustments, repeat the process in small increments.