DESCRIPTION	QTY.
Back Plate	2
GLASS	1
Connector	8
Tube-12, L=1.8	2
HUB-CON	2
Tube-12, L=2	2
Hub	2
LOCK	2
TUBE -38,L=13.5	2

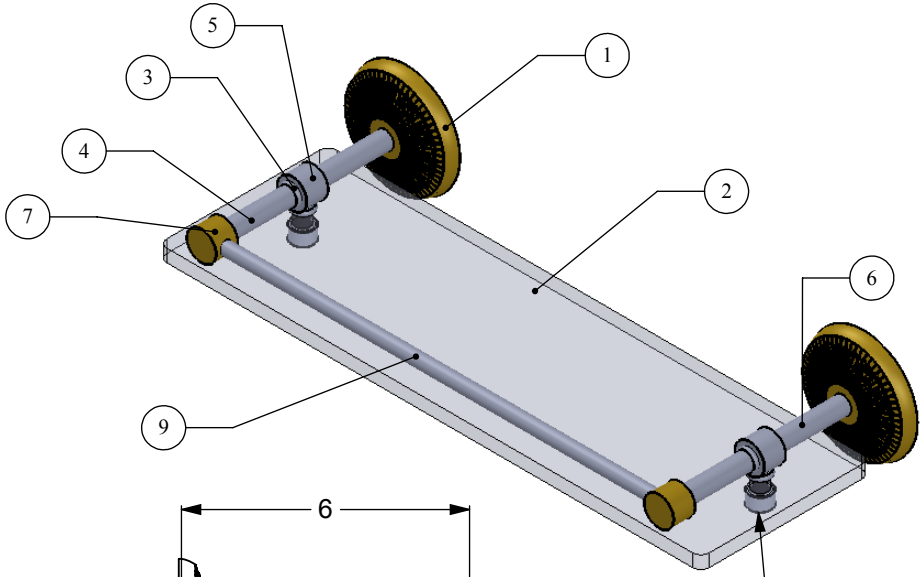

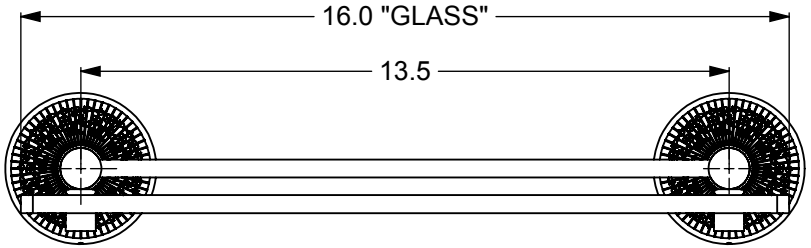

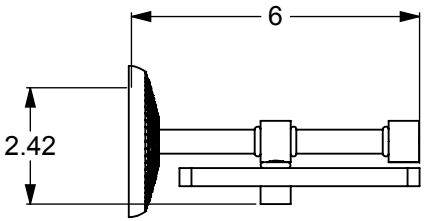

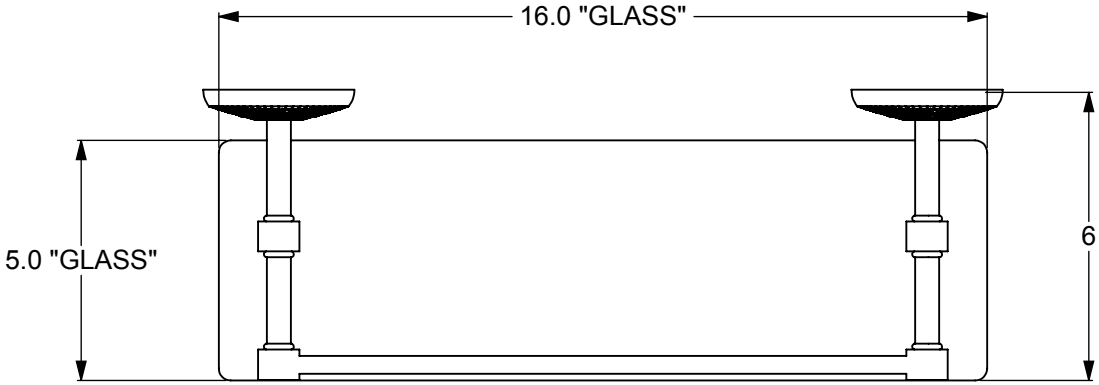

UNLESS OTHERWISE STATED											
DO NOT SCALE DRAWING	X.XXX +/-0.025		INITIALS	DATE	ITEM	QTY	DRG/PART NO	CLIENT:			
CHAMFER ALL EDGES 0.5X45°	X.XX +/-0.1	DESIGNED		IJM	MATERIAL	BRASS		WEIGHT		FINISH	TBD
DRAWING ISO	X.X +/-0.25	DRAWN		IJM	HEAT TREAT	NA				QUANTITY	
	X +/-0.75	CHECKED		R. ANDRIS	CUSTOMER			CUSTOMER No		---	
	ANGLES	PROJ.ENG									REV
	X.XX +/-0.05°	SAFETY									0
	X.X +/-0.1°	APPROVED		R. ANDRIS							
	X +/-0.5°	FILENAME								SCALE 1:4	SHEET: 01 A4
FIRST ANGLE PROJECTION	MACHINED FINISH 3.2										