Ceiling Fan

Installation Manual

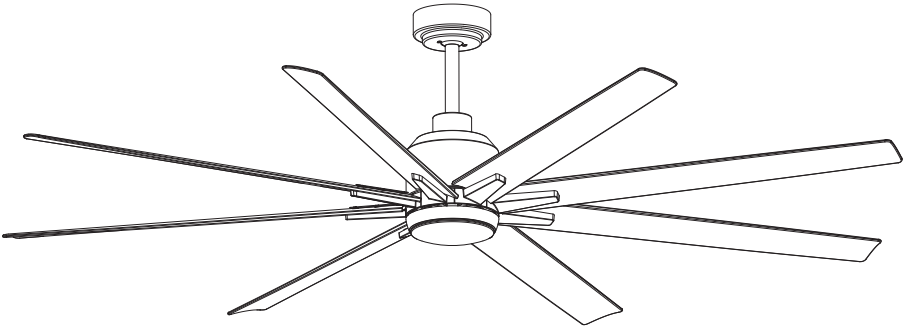

THANK YOU

We appreciate the trust and confidence you have placed in us through the purchase of this ceiling fan.We strive to continually create quality products designed to enhance your home.Thank you for choosing us!

Table of contents

Table of contents ---------- 1

Safety Precautions ---------- 2

Warranty ---------- 3

Pre-Installation

Tools needed ---------- 3

Installation kit ---------- 4

Blade balancing kit ---------- 4

Specification ---------- 5

Installation

Step 1(Basic assembly of the fan) ---------- 6

Step 2 (Ceiling bracket installation) ---------- 8

Step 3 (Receiver and wiring installation) ---------- 10

Step 4 (Light kit and blades installation) ---------- 11

Step 5(Switch on and ceiling fan works) ---------- 12

Remote Control Operation ---------- 13

Tuya Smart WiFi Remote Control ---------- 14

Third-Party Voice Services ---------- 15

TroubleShooting ---------- 16

Balancing ---------- 16

Safety Precautions

The information contained in the following pages has been prepared to ensure your maximum enjoyment of your fan
Please remove the fuse or turn off the circuit breaker to cut off the power before installing the fan. Ensure all electrical connections are in compliance with local laws, regulations and national eletrical codes. If you are not familiar with electrical installation and wiring, please hire a qualified electrician or consult the wiring manual.

1. For your safety, all electrical connections and disconnections should be performed by a qualified electrician.
2. Any action performed for the electrical connection of the device must be carried out after ensuring that the general power supply is disconnected,by removing the corresponding fuse or disarming the protective switch in order to ensure total isolation of the power supply.
3. When deciding where to mount the fan, be sure that there is at least 30 inches(76 cm) of space between the fan and any wall or other obstruction that the fan blades could collide with. The greater this distance, the more effective the air flow produced.After the fan is mounted, be sure that the blades are no less than 7ft(2.1 m) above the ground.
4 . The anchor point for the fan must be able to support a weight of at least 100 pounds(45 kg). If mounting on a ceiling junctionbox, be sure that the fan is adequately supported to prevent loosening or turning.
5. The fan's electrical connection must be "grounded" (the fan's ground cable connected to the installation's grounding network) in order to avoid any branching that may be dangerous to people.
6. Do not connect the fan's power supply to any dimmers,potentiometers, or light switches, as it will cause the fan tomalfunction and/or will damage the motor. The fan must be directly connected to a properly protected installation circuit(magnetothermal differential switch with the adequate size for the fan's consumption and technical specifications).Only use the fan's control to turn it on or stop it.
7. It is recommended to not use these types of fans along with gas installations simultaneously in the same room.
8. The fan must be not be moving and must have come to a complete stop before changing its direction of rotation.This will prevent damage to its motor and to the control unit, when applicable.
9. Do not insert anything that could hit the fan's blades into its pathway while it is moving, as this could cause damage to people, can damage the blades, and can offset the balance of the unit, causing vibrations and wobbling.
10. After installing the fan, ensure that all fastenings aresecure and tightened in order to avoid any noise caused by loose elements.
11. Due to the fan's movement, certain fastenings may become loose. Check all fastenings twice per year at a minimum in order to ensure that they are sufficiently tight. If necessary, they must be retightened.
12. The motor housing can be cleaned with a soft brush or a lint-free cloth to avoid scratching the surface. Clean the blades with a lint-free cloth. Important: Turn off the main power supply before starting any maintenance. Do not clean the fans with water or a damp cloth.

Note: The important warnings and instructions indicated in this manual are not guaranteed to cover all possible conditions and situations that may occur. It must be understood that common sense, precaution, and care are factors that cannot be included in all products. These factors can and must only be provided by the user who maintains and enjoys this fan.

Warranty

The manufacturer warrants the fan motor to be free from defects in workmanship and material present at time of shipment from the factory for a period of lifetime after the date of purchase by the original purchaser. The manufacturers also warrants that all other fan parts, excluding any glass or acrylic blades, to be free from defects in workmanship and material at the time of shipment from the factory for a period of one year after the date of purchase by the original purchaser. We agree to correct such defects without charge or at our option replace with a comparable or superior model if the product is returned. To obtain warranty service, you must present a copy of the receipt as proof of purchase. All costs of removing and reinstalling the product are your responsibility. Damage to any part such as by accident, misuse, improper installation or by affixing any accessories, is not covered by this warranty. Because of varying climatic conditions this warranty does not cover any changes in brass finish, including rusting, pitting, corroding, tarnishing or peeling. Brass finishes of this type give the longest useful life when protected from varying weather conditions. A certain amount of “wobble” is normal and should not be considered a defect. Servicing performed by unauthorized persons shall render the warranty invalid. There is no other express warranty. We hereby disclaim any and all warranties, including but not limited to those of merchantability and fitness for a particular purpose to the extent permitted by law. The duration of any implied warranty which cannot be disclaimed is limited to the time period as specified in the express warranty. Some states do not allow limitation on how long an implied warranty lasts, so the above limitation may not apply to you. The retailer shall not be liable for incidental, consequential, or special damages arising out of or in connection with product use or performance except as may otherwise be accorded by law. Some states do not allow the exclusion of incidental or consequential damages, so the above exclusion or limitation may not apply to you.

This warranty gives specific legal rights, and you may also have other rights which vary from state to state.

This warranty supersedes all prior warranties. Shipping costs for any return of product as part of a claim on the warranty must be paid by the customer.

Pre-Installation

Tools Needed

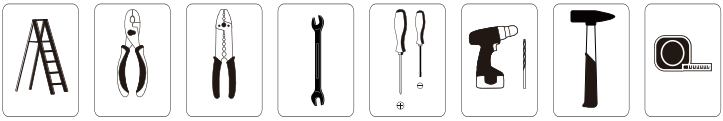

Installation kit

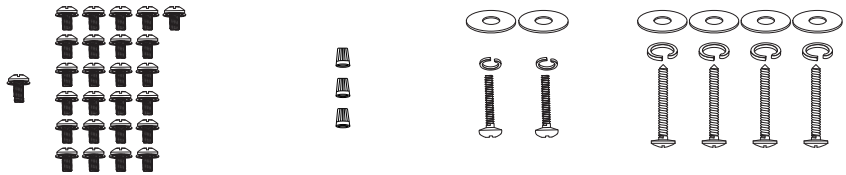

AA BB CC DD

Part	Description	Quantity
AA	Blade attachment screw with lock washer	1+25
BB	Wire nut	3
CC	Screws	2
DD	Self tapping screw	4

Blade balancing kit

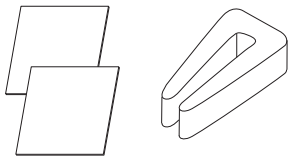

Pre-Installation

Specification

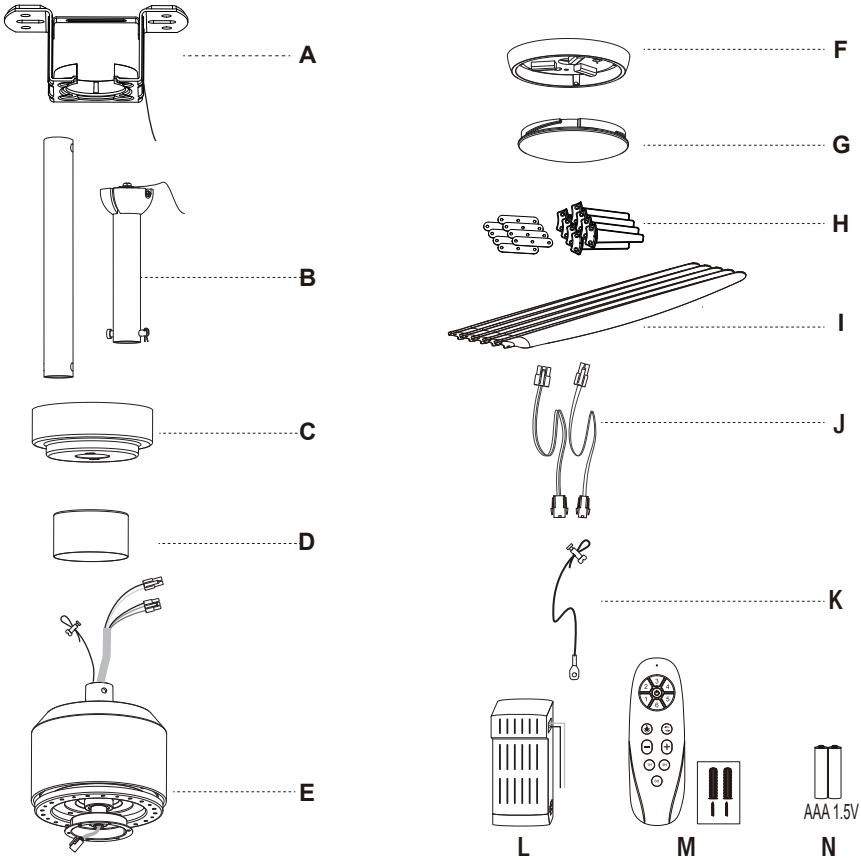

Part	Description	Quantity
A	Bracket	1
B	Down rod	2
C	Canopy	1
D	Coupling cover	1
E	Body/motor	1
F	Light kit	1
G	Light cover	1
H	Blades	8

Part	Description	Quantity
I	Blades connector	8
J	Spare power cable	2
K	Spare safety rope	1
L	Receiver	1
M	Transmitter	1
N	Battery	2

Installation Instruction

Step 1(Basic assembly of the fan)

① Decompose drown rod and remove the screws which are used to install the blades.

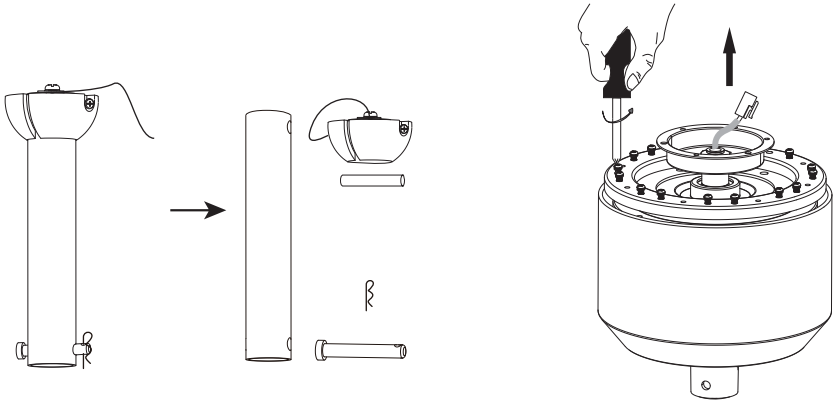

Importance:If you are going to use a long down rod, follow these steps.

1.Connecting the Spare Power Cable

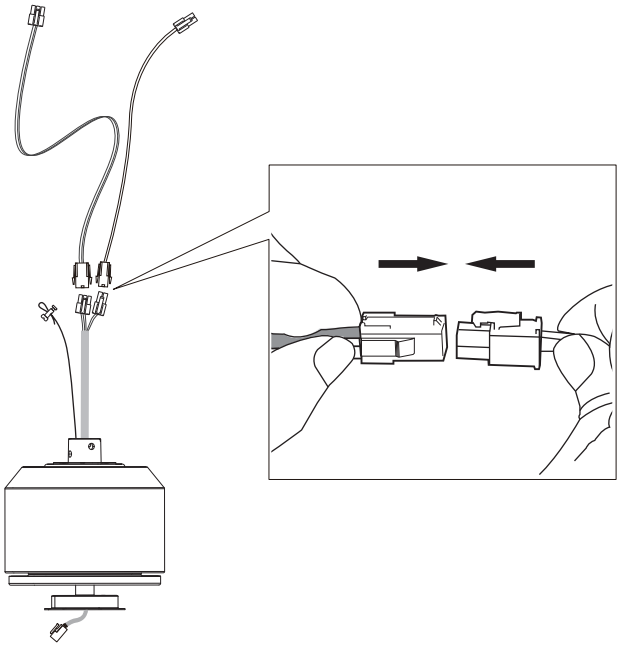

Installation Instruction

2.Connecting the Spare Safety rope

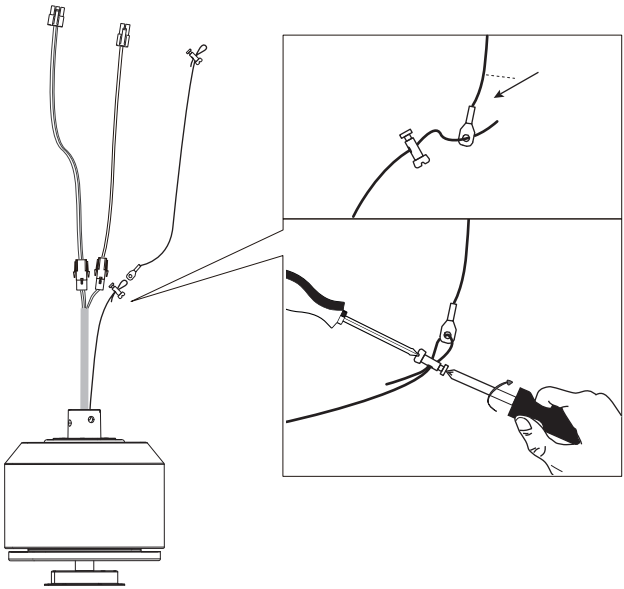

② Route all the wires from the motor the down rod through. Fix the down rod to the coupling with bolt,and then insert the clevis pin.Finally tighten the two screws on coupling

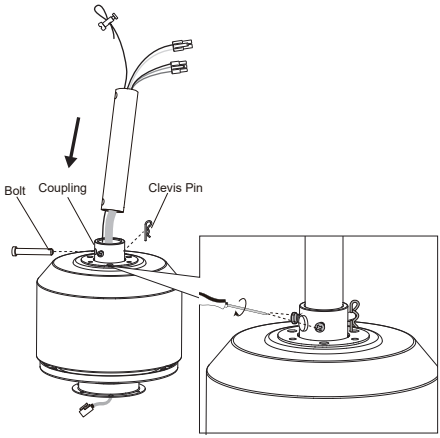

③ Install the coupling cover and canopy. Then insert the fixing pin, push the hanging ball up, and fix it with screws.

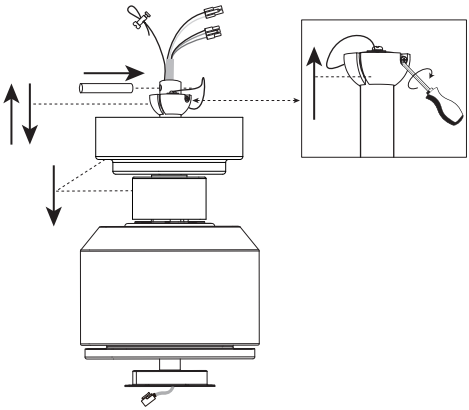

④ Connect Blades with Blades connector

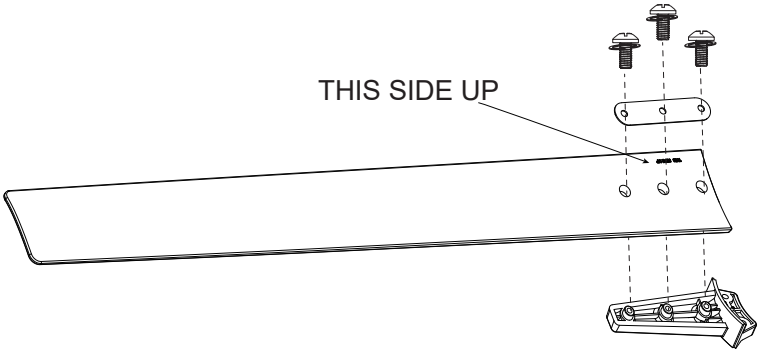

Step 2 (Ceiling bracket installation and fan into the installed Bracket.)

① Turn off the fan power supply at the circuit breaker box and the wall switch.

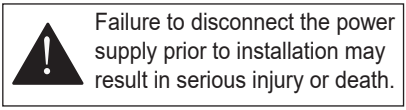
Failure to disconnect the power supply prior to installation may result in serious injury or death.

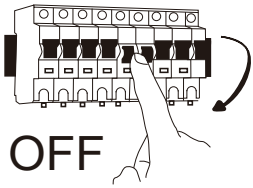

② Choose the following installation methods according to the actual situation of the roof.

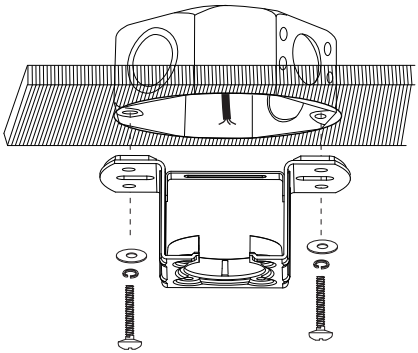

Octagon box

Installation Instruction

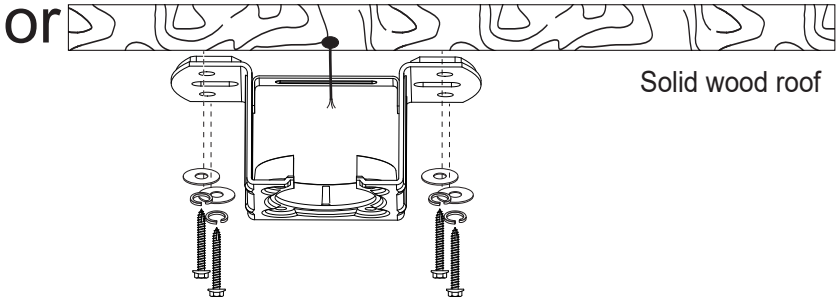

③ Snap the basically assembled fan into the installed Bracket.

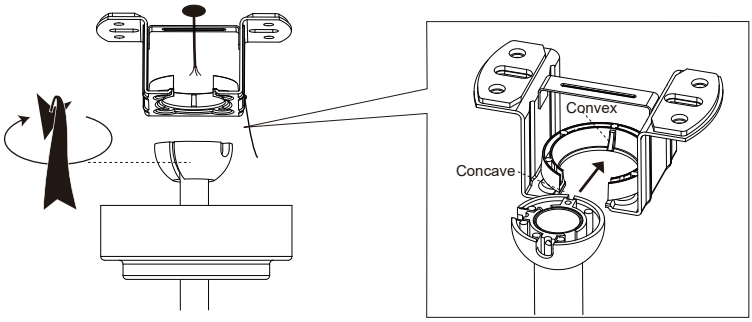

Safety rope installation method

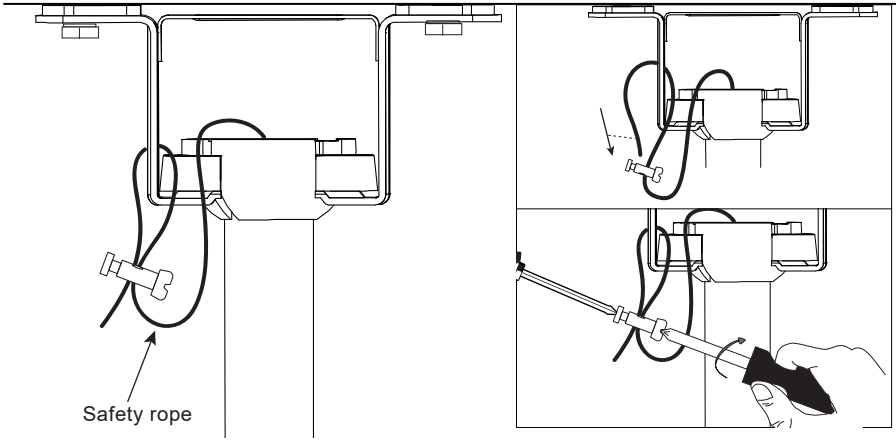

Installation Instruction

Step 3 (Receiver and wiring installation)

① Follow the wiring diagram for wiring.

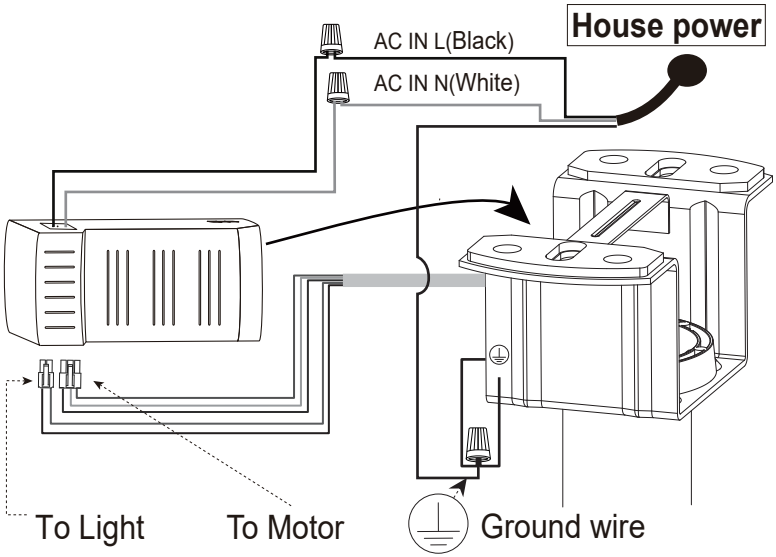

② Put the receiver into the bracket and arrange the wires

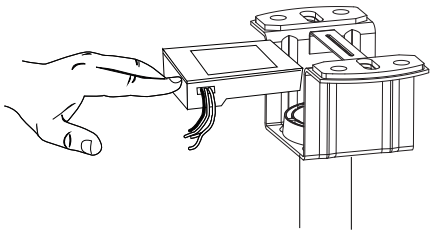

③ Adjust the position of canopy, then fix it with screws.

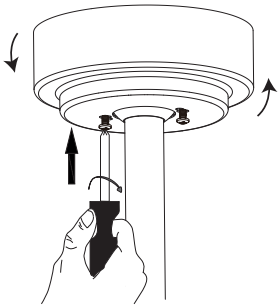

Step 4 (Blades and Light kit installation)

① Align the connected blade with the mounting hole, and then fix it with screws.

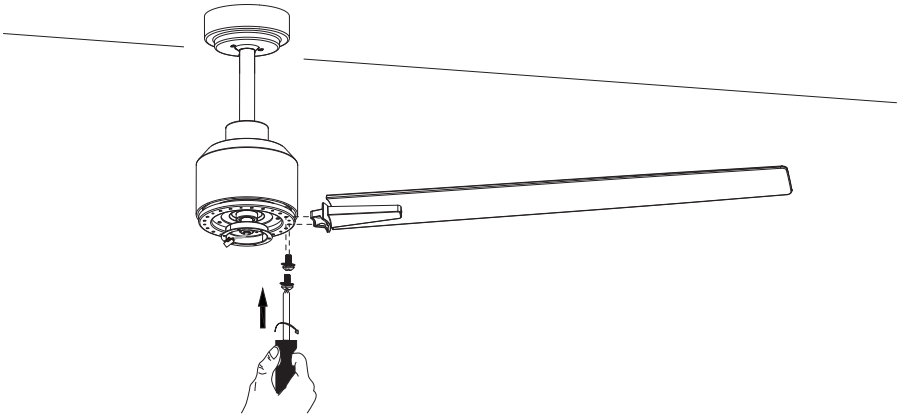

② Remove the pre-installed screws.
Connect terminal, and then lock the light kit.

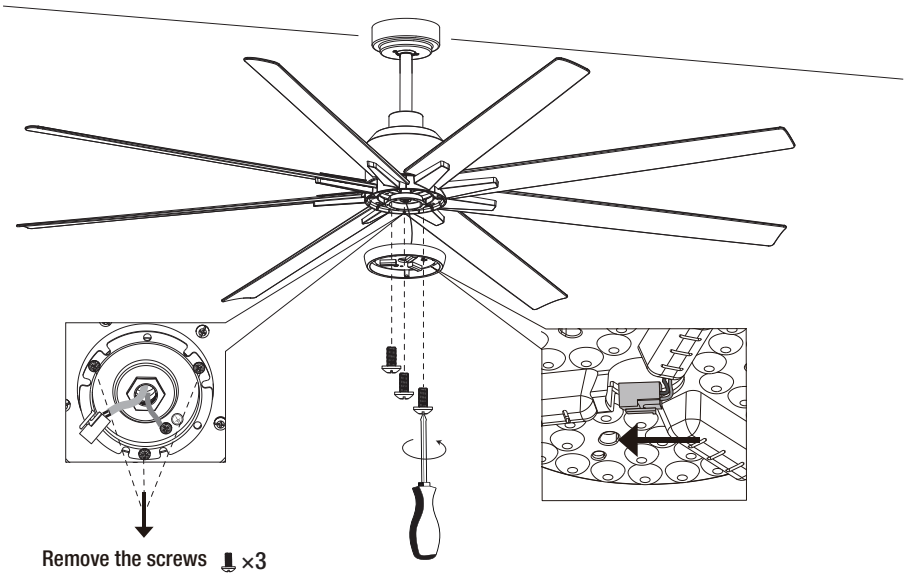

Installation Instruction

③ Installation of light cover.

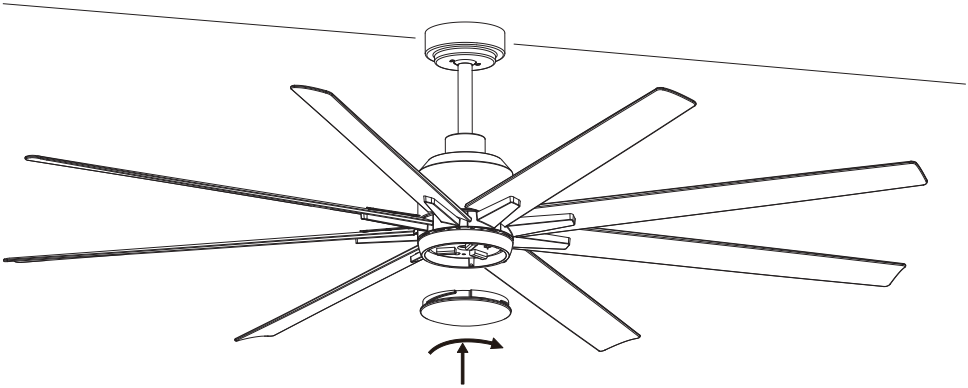

Step 5(Switch on and ceiling fan works)

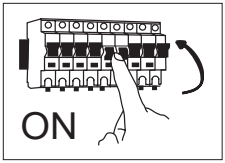

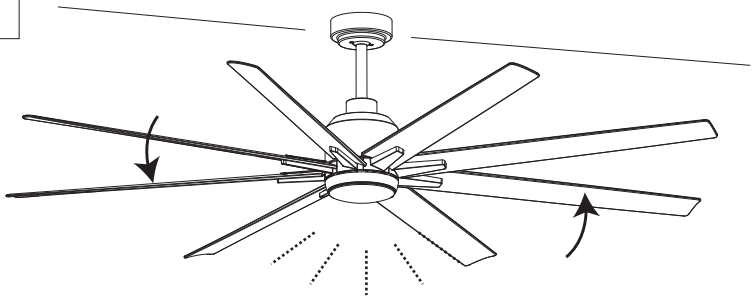

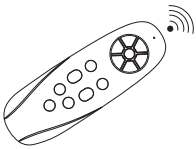

Remote Control Operation

Transmitter learning process

1.Insert the 2 pcs of batteries into transmitter.
2.Turn on the power supply to the fan. Within 10 sec, press and hold the “1” and “2” button for about 3 sec. Once the receiver has detected the frequency, receiver will “Beep Beep” twice.Programming process is completed and fan is ready to use.

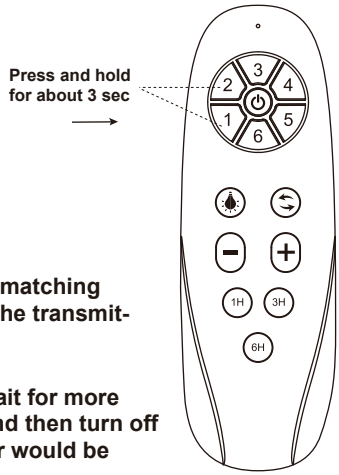

NOTE: **The remote control device has already been code matching when it leaves the factory.If the fan is not responding to the transmitter,repeat transmitter learning process.**

ABOUT THE MEMORY FUNCTION OF LIGHTS**: Please wait for more than 3-5 seconds keep this color that you need at first, and then turn off wait for at least 10 seconds turn on again. This light color would be your need.**

IMPORTANT: **The fan can only operate normally after all blades are installed. If the fan is turned on without installing the blades, the receiver will detect that the fan speed is too fast and the fan will automatically stop.**

Remote Control Holder Installation

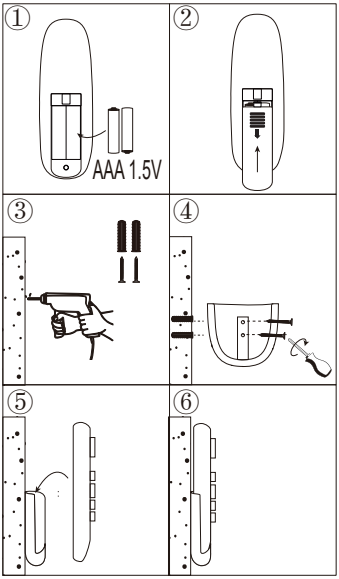

Transmitter Function

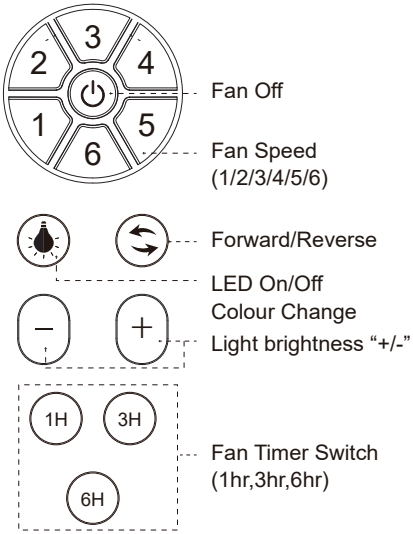

WiFi Remote Control

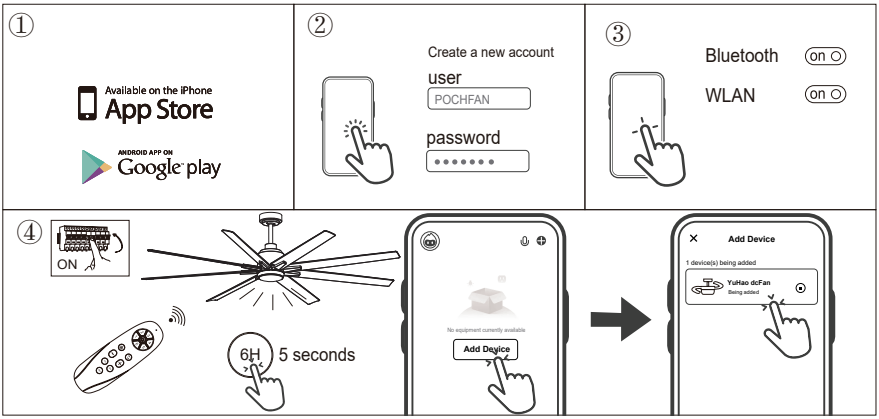

1-Search and download in the App Store, Google play.
2- Install and open the app.
3.1 Open your App account.
3.2 Create a new account:
→ input your mobile number or email address.
→ click to get the verification code (check your mail box).
→ input the verification code.
→ set login password.
→ accept the permissions.
→ you have your account created.
4- Turn on Bluetooth and WiFi , connect WiFi (Note: WiFi can only use 2.4G router)
5- **Link the ceiling fan:** Open App,then turn on the power supply of the fan controller and press and hold the “6h” button of the remote control handle for about 5 seconds within 10 seconds after the fan is powered on. At this time, click Add device in the App main interface, the light will flash and the connection icon of the fan will appear on the App interface.
Next click “Add device” button.Then you can enter the mobile phone control interface to control the fan (Note: When Bluetooth matching, the fan motor cannot be in working state).

NOTES
1. Please check whether the WIFI account and password information are correct.
2. Reducing the distance between mobile phone, router and an receiver can connect more faster, otherwise it may cause connection failure.

TroubleShooting

WARNING: Make sure the power is off at the electrical panel box before you attempt any repairs.

Problem	Solution
The fan will not start.	□ Check the main and branch circuit fuses or breakers.
	□ Check the line wire connections to the fan and switch wire connections in the switch housing.
	□ Check to make sure the frequency switches from the remote control and receiver are set to the same frequency.
The fan sounds noisy.	□ Make sure all motor housing screws are snug.
	□ Make sure the screws that attach the fan blade to the motor hub are tight.
	□ Make sure the wire nut connections are not rattling against each other or the interior wall of the switch housing.
	□ Allow a 24-hour "breaking-in" period. Most noises associated with a new fan disappear during this time.
	□ If using the ceiling light kit, make sure the glassware is secured tightly.
	□ Make sure there is a short distance from the ceiling to the canopy. It should not touch the ceiling.
	□ Make sure your ceiling box is secure and that rubber isolator pads are used between the mounting bracket and outlet box.
The remote control is not working.	□ Make sure the frequency switches are set correctly.

Balancing – Wobbling problems during fan operation

If the fan body wobbles during its operation, this is not a sign of malfunctioning (even if it wobbles a few centimeters). To reduce wobbling, you can turn off the fan,and:

1.Check that all blades are properly fastened by tightening their screws.

2.Check the distance between each blade and the ceiling. Measurements to the ceiling can be carried out as shown in the following diagram. If variations exist and you have already correctly tightened the screws, check that all blades have the same shape. If any of them have a shape that is visibly different, this may be causing an imbalance during fan operation.

If you have completed the previous steps and the wobbling has not resolved,you should apply dynamic balancing with the kit provided, as explained below:

1.Turn the fan on to the highest speed so that the greatest amount of wobbling is produced.

2.Turn off the fan. Select a blade and place a clip on it (see diagram) halfway between the fastening and the far edge of the blade.

3.Turn on the fan and check whether the wobbling has improved or gotten worse.Turn it off once again and if the wobbling has not improved, place the clip on another blade. Repeat this process and determine on which blade it improves the wobbling.

4.Leave the clip on the blade that produces the best results. Move the clip forward or backwards on this blade until finding the position that offers the best results.
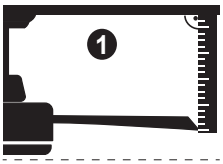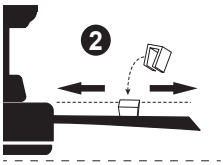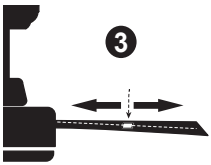
5.Afterwards, remove the clip and place one of the weights on the upper part of the center line of the blade at the position where the clip was located.