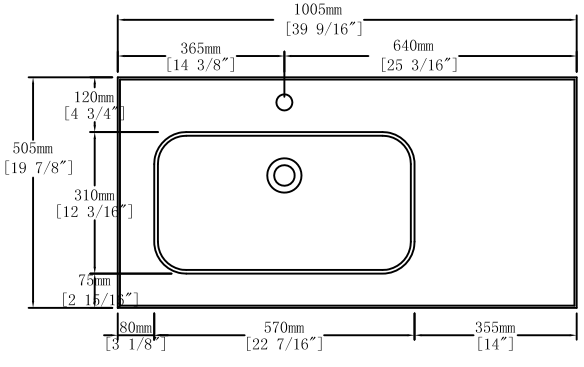

Top View

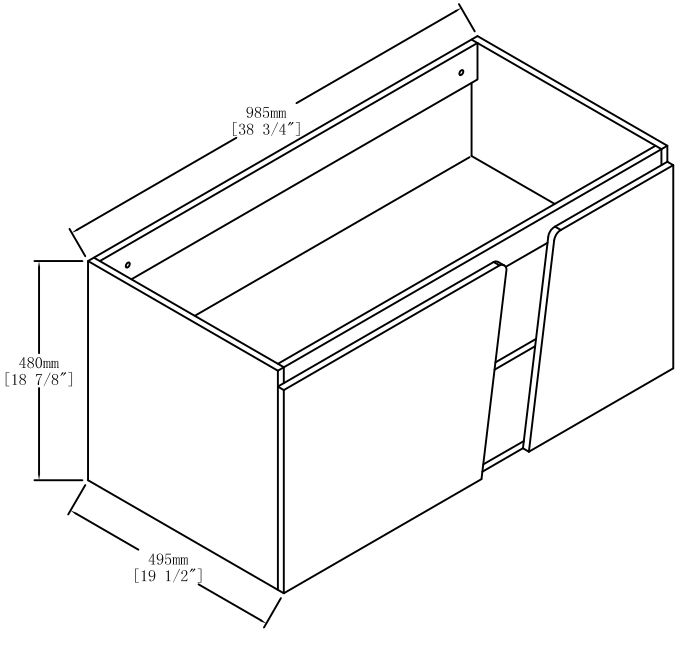

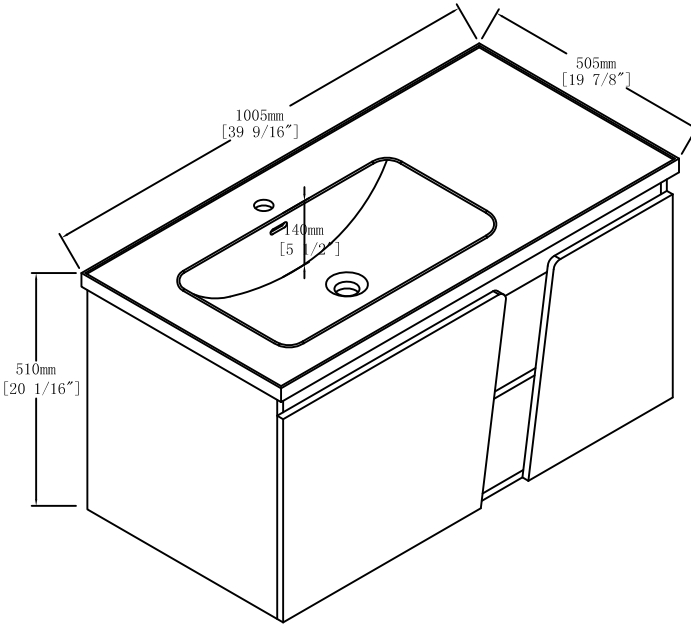

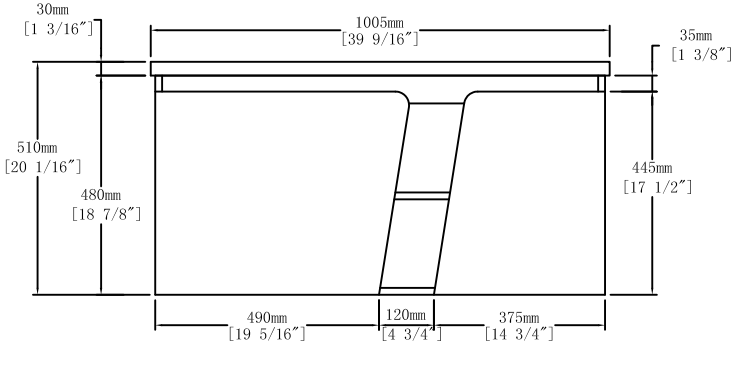

Front View

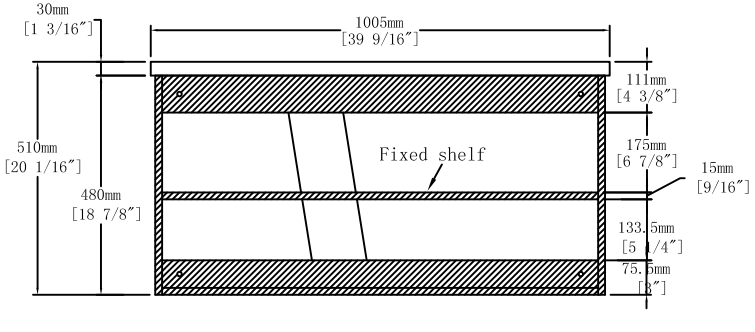

Back View