INSTRUCTION MANUAL V0

CIFPT63-43

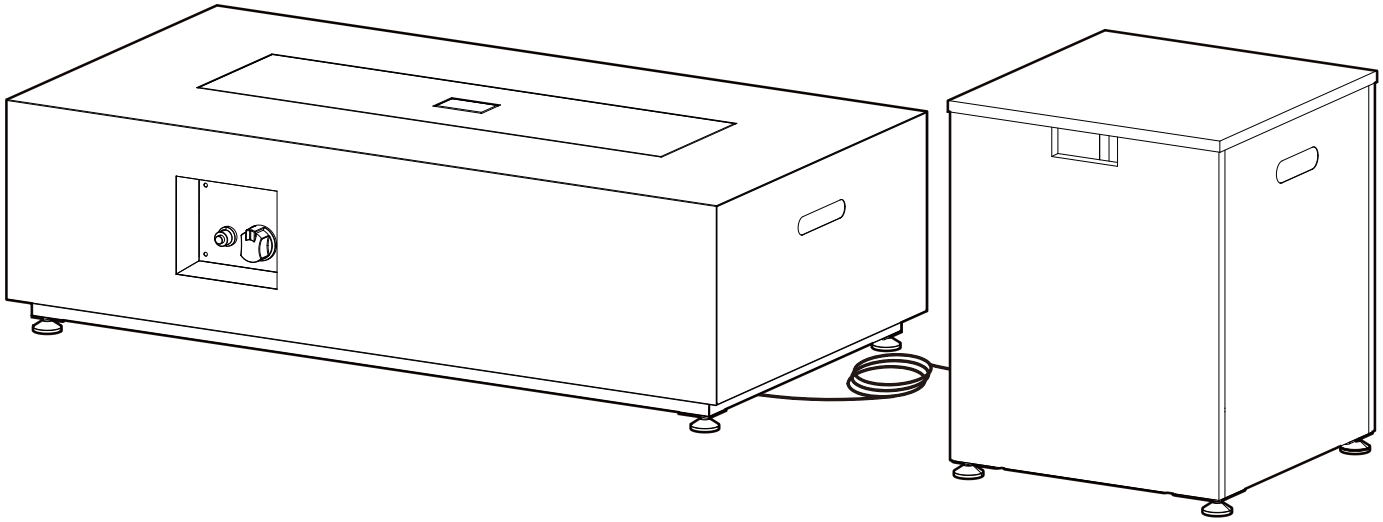

Fire Pit Table

SAFETY INFORMATION

SAFETY WARNING

Read instructions before first use. This appliance must be installed in accordance with any and all applicable regulations.

WARNING: For Outdoor Use Only!

Installation and service must be performed by a qualified installer, service agency, or gas supplier.

DANGER

FIRE OR EXPLOSION HAZARD
If you smell gas:

- Shut off gas to the appliance.
- Extinguish any open flame.
- If odor continues, leave the area immediately
- After leaving the area, call your gas supplier or fire department.

Failure to follow these instructions could result in fire or explosion, which could cause property damage, personal injury, or death.

DANGER



CARBON MONOXIDE HAZARD

This appliance can produce carbon monoxide which has no odor.

Using it in an enclosed space can kill you.

Never use this appliance in an enclosed space such as a camper, tent, car, or home.

WARNING:

Certain materials or items, when stored under the fire pit table, will be subject to radiant heat and could be seriously damaged.

WARNING:

The max. inlet supply pressure: max. Gas supply 11 in w.c. (2.74kPa)

WARNING:

- Keep gasoline and other flam–mable vapors and liquids away from this appliance at all times.
- Unless connected for use, do not store LP–cylinder near this appliance.

Solid fuels shall not be burned with this appliance.

INSTALLER: Leave this manual with the appliance.

CONSUMER: Retain this manual for future reference.

DANGER

- CARBON MONOXIDE HAZARD
- This fire pit table is a combustion appliance. All combustion appliances produce carbon monoxide (CO) during the combustion process. This product is designed to produce extremely minute, non–hazardous amounts of CO if used and maintained in accordance with all warnings and instructions. Do not block the airflow into or out of the fire pit table.
- Never use inside the house or other unventilated or enclosed areas.
- Carbon monoxide (CO) poisoning produces flu–like symptoms, watery eyes, headaches, dizziness, fatigue and possibly death. You can't see it and you can't smell it. It is an invisible killer. If these symptoms are present during the operation of this product, get fresh air immediately!
- For outdoor use only.
- This fire pit table consumes air (oxygen). Do not use in unventilated or enclosed areas. Failing to follow these instructions will endanger your life.

⚠ DANGER: FLAMMABLE GAS UNDER PRESSURE.

LEAKING LP–GAS MAY CAUSE A FIRE OR EXPLOSION IF IGNITED CAUSING SERIOUS BODILY INJURY OR DEATH.

CONTACT LP GAS SUPPLIER FOR REPAIRS, OR DISPOSAL OF THIS CYLINDER OR UNUSED LP–GAS.

⚠ WARNING: FOR OUTDOOR USE ONLY.

* DO NOT USE OR STORE CYLINDER IN A BUILDING, GARAGE OR ENCLOSED AREA.

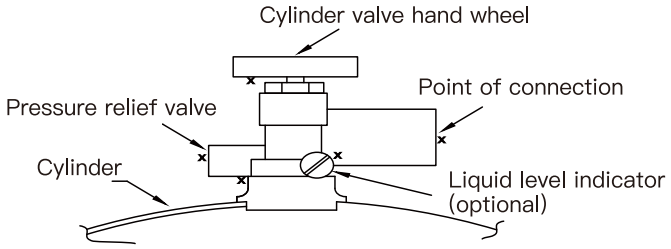

DO NOT REMOVE, DEFACE, OR OBLITERATE THIS LABEL
* EXCEPT AS AUTHORIZED BY ANSI/NFPA 58.

⚠ DANGER. Do not store a spare LP cylinder under or near a barbecue grill, or other heat sources. NEVER fill an LP cylinder beyond 80% full: a fire causing death or serious injury may occur.

⚠ WARNING:

- Know the odor of propane gas. If you hear, see or smell leaking propane gas, immediately get everyone away from the cylinder and call the Fire Department. Do not attempt repairs.
- Contact your propane gas supplier to:
  Be certain the cylinder is purged of trapped air prior to first filling.
  Be certain not to overfill the cylinder.
  Be certain the cylinder requalification date is checked.
- Propane gas is heavier than air and may settle in low places while dissipating.
- Contact with the liquid contents of cylinder will cause freeze burns to the skin.
- Do not allow children to tamper or play with the cylinder.
- When not connected for use, keep the cylinder valve turned off. This appliance shall be limited to a cylinder of 20 lbs capacity or less.
- Do not expose LP tanks to extremely high temperatures. The relief valve may open allowing a large amount of flammable gas to escape.
- When transporting, keep the cylinder secured in an upright position with the cylinder valve turned off.

⚠ DANGER

FIRE OR EXPLOSION HAZARD

- Keep solid combustibles, such as building materials, paper, or cardboard a safe distance away from the fire pit table as recommended by the instructions.
- Provide adequate air clearance around the opening near the combustion chamber.
- Never use the fire pit table in spaces that do or may contain volatile, or airborne combustibles, or products such as gasoline, solvents, paint thinner, dust particles or unknown chemicals.
- During operation, this appliance can be a source of ignition. Keep the fire pit table area free and clear from combustible materials, gasoline, paint thinner, cleaning solvent, and other flammable vapors and liquids. Do not use a fire pit table in areas with high dust content.

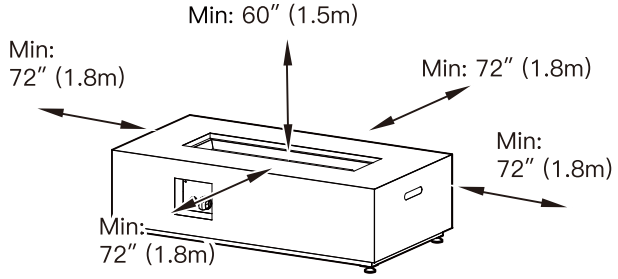

Minimum fire pit table clearances from combustible materials: 6 ft (72″) from the sides, 6 ft (72″) from the rear and 5 ft (60″) from the ceiling.

WARRANTY

1-YEAR LIMITED WARRANTY

- We warrant the metal frame and burner to be free of manufacturing defects to the original purchaser for one year.
- Proof of purchase (from authorized retailer) is required for warranty claims.

WHAT IS NOT COVERED

It remains the customer's responsibility for freight and packaging charges to and from our service center. This warranty does not cover commercial use, acts of nature, fire, freezing or abuse. In addition, purchased parts are not covered under this warranty. We reserve the right to make substitutions with similar merchandise, if the model in question is no longer in production.

PREPARATION

UNBOXING

Carefully remove all pieces from the carton and make sure that you have all parts (refer to the hardware and package contents list). If you are missing parts, please contact product support for further assistance.

YOUR OWNER'S MANUAL

Keep and store this Owner's Manual for future reference. It contains important instructions and procedures for safety and maintenance.

Note: Please read and understand the entire manual before you assemble, operate, or install the fire pit table.

SUPPLIED PARTS AND HARDWARE

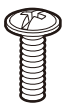

M6 x 12mm
Bolt
[AA] x 24

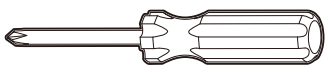

Phillips Screwdriver
[BB] x 1



AAA Battery
[CC] x 1

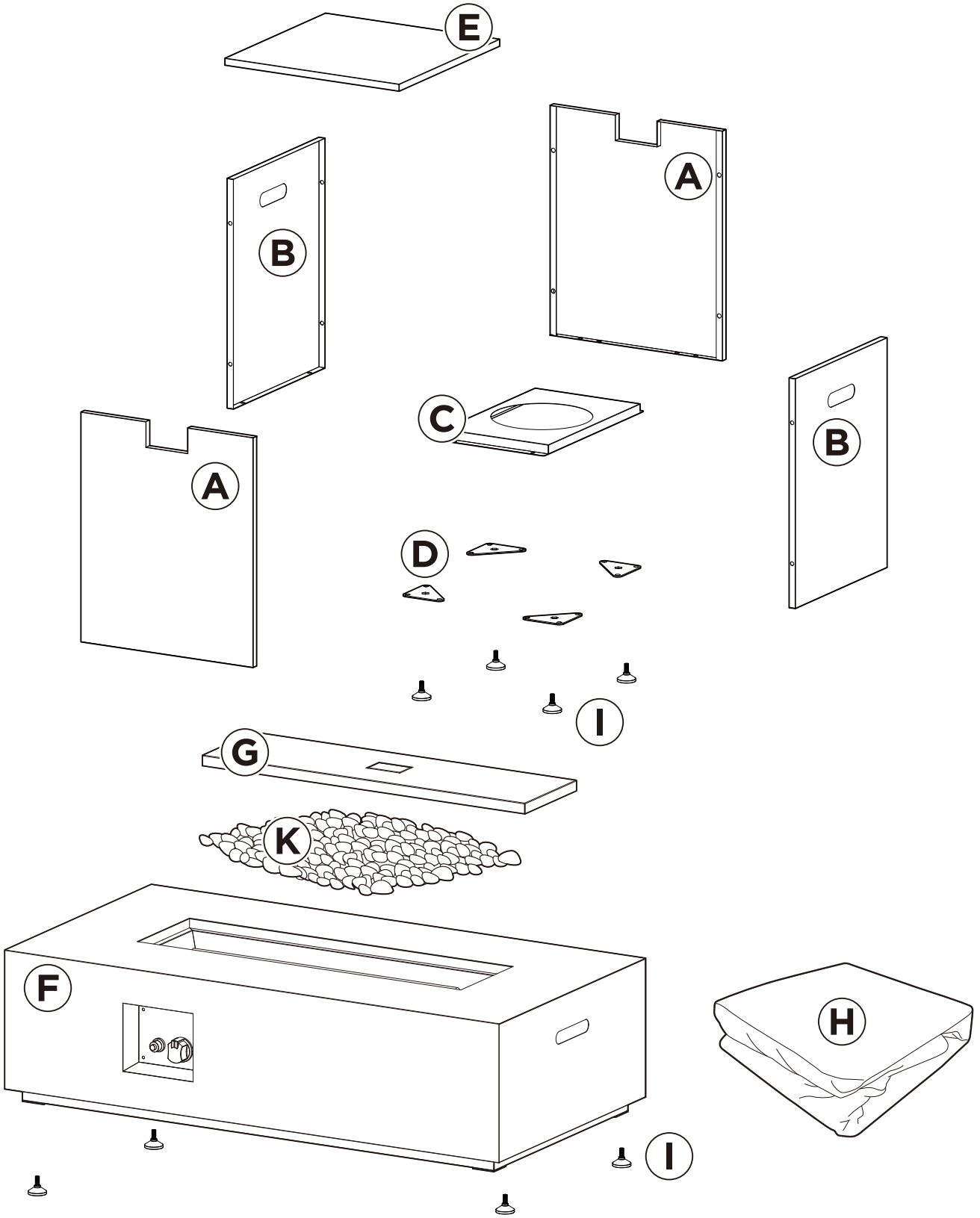

NO.	DESCRIPTION	QUANTITY
A	Cylinder Holder Side Panel	2
B	Cylinder Holder Side Panel	2
C	Cylinder Holder Bracket	1
D	Connector Plate	4
E	Cylinder Holder Top Panel	1

NO.	DESCRIPTION	QUANTITY
F	Fire Pit Table	1
G	Top Lid	1
H	Dust Cover	1
I	Foot Pad	8
K	Glass Stones	1

OPERATION CHECKLIST

For a safe and pleasurable heating experience, complete this checklist before each use.

Before Operating

1. I am familiar with the entire owner's manual and understand all precautions noted.
2. All components are properly assembled, intact and operable.
3. No alterations have been made.
4. All gas connections are secure and do not leak.
5. Wind velocity is below 10mph.
6. Unit will operate at reduced efficiency below 40°F/4.4°C.
7. Fire pit table is outdoors (outside any enclosure).
8. There is adequate fresh air ventilation. Do not use this appliance if any part has been under water. Immediately call a qualified service technician to inspect the appliance and to replace any part of the control system and gas control which has been under water.
9. Fire pit table is away from gasoline or other flammable liquids or vapors.
10. Fire pit table is away from windows, air intake openings, sprinklers and other water sources.
11. Fire pit table is at least 72″ away from combustible materials on the rear and sides and 60″ away from the ceiling.
12. Fire pit table is on a hard and level surface.
13. There are no signs of spiders or insects.
14. All burner passages are clear.
15. All air circulation passages are clear.
16. Children and adults should be alerted to the hazards of high surface temperature and should stay away to avoid burns or clothing ignition.
17. Young children should be carefully supervised when they are in the area of the fire pit table.
18. Clothing or other protective material should not be hung from the fire pit table, or placed on or near the fire pit table.
19. Any guard or other protective device removed for servicing must be replaced prior to operating the fire pit table.
20. Installation and repair should be done by a qualified service person. The fire pit table should be inspected before use and at least annually by a qualified service person.
21. More frequent cleaning may be required as necessary. It is imperative that the control compartment, burner and circulating air passageways be kept clean.

After Operation

1. The control knob should be in the "OFF" position.
2. The gas tank valve should be closed.

INSTALLATION

STEP 1

Note: To avoid scratching the tabletop, it is highly recommended to assemble the fire pit table using the unfolded box or another soft surface during installation.

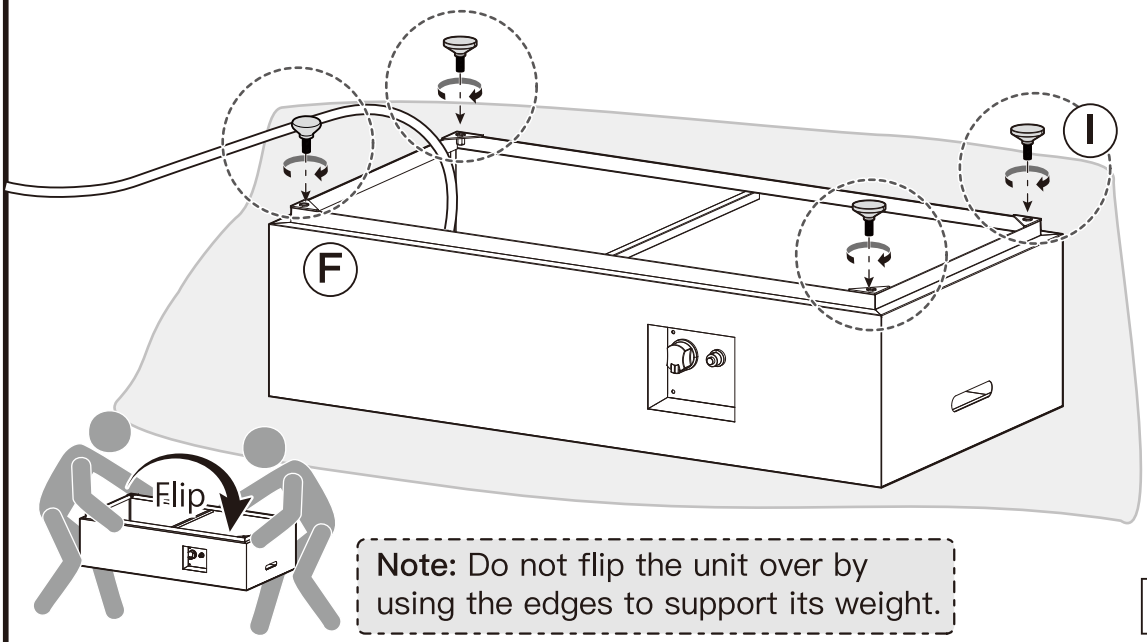

Note: Do not flip the unit over by using the edges to support its weight.

[F] x 1 [I] x 4

STEP 2

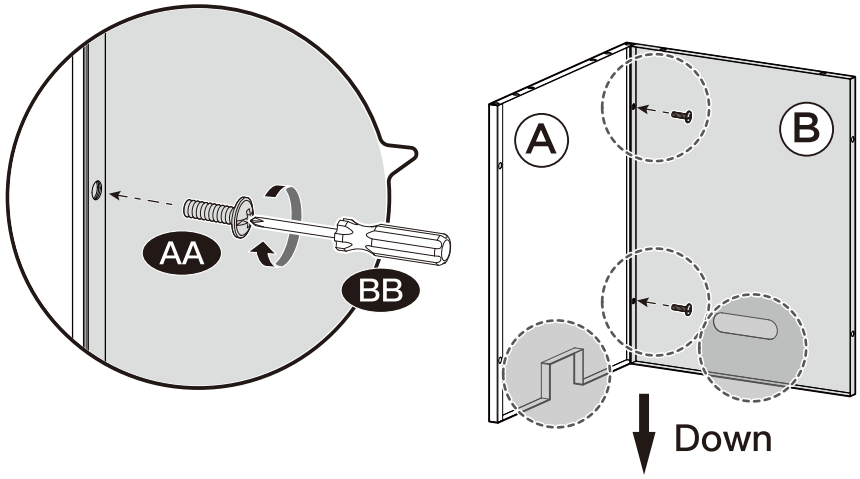

2x

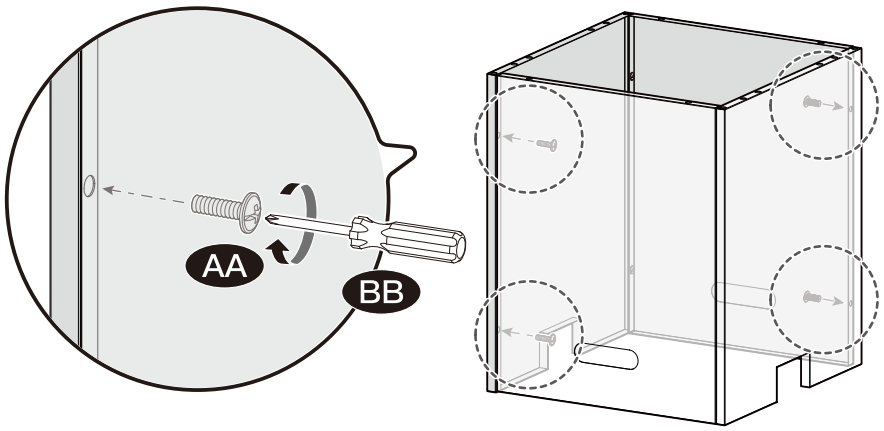

[A] x 2 [B] x 2

[AA] x 8 [BB] x 1

STEP 3

Note: The protruding side faces down.

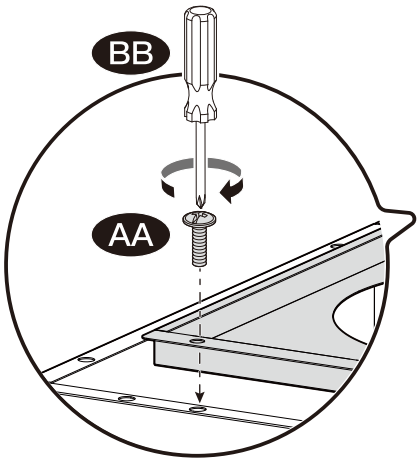

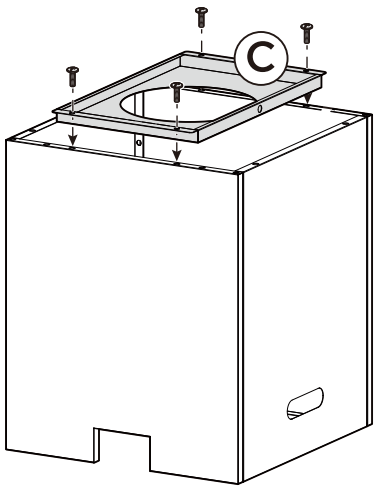

[C] x 1

[AA] x 4 [BB] x 1

STEP 4

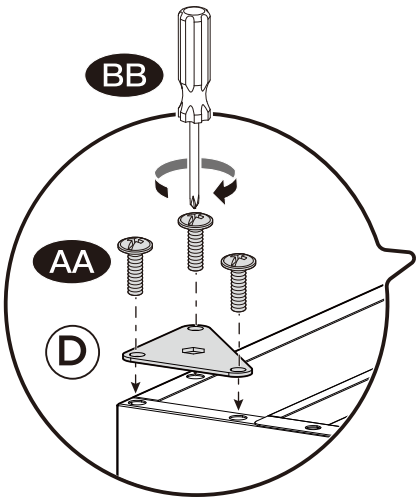

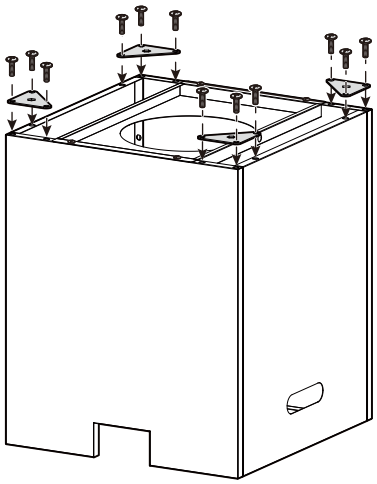

[D] x 4

[AA] x 12 [DD] x 1

STEP 5

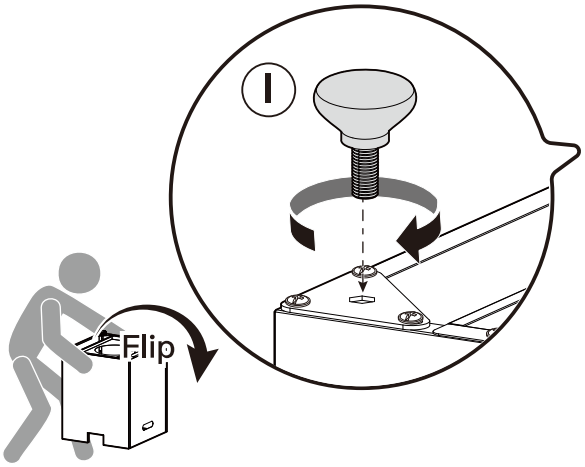

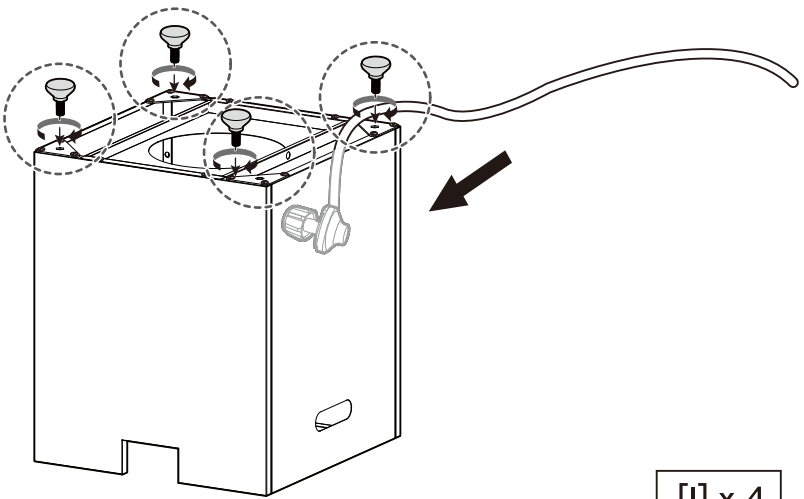

[I] x 4

STEP 6

Note:

1. Maintain space around the ignition cover. Do not block with glass stones.
2. After placing the top lid, there might be small gaps around it through which water can seep in. Please keep the tabletop dry.

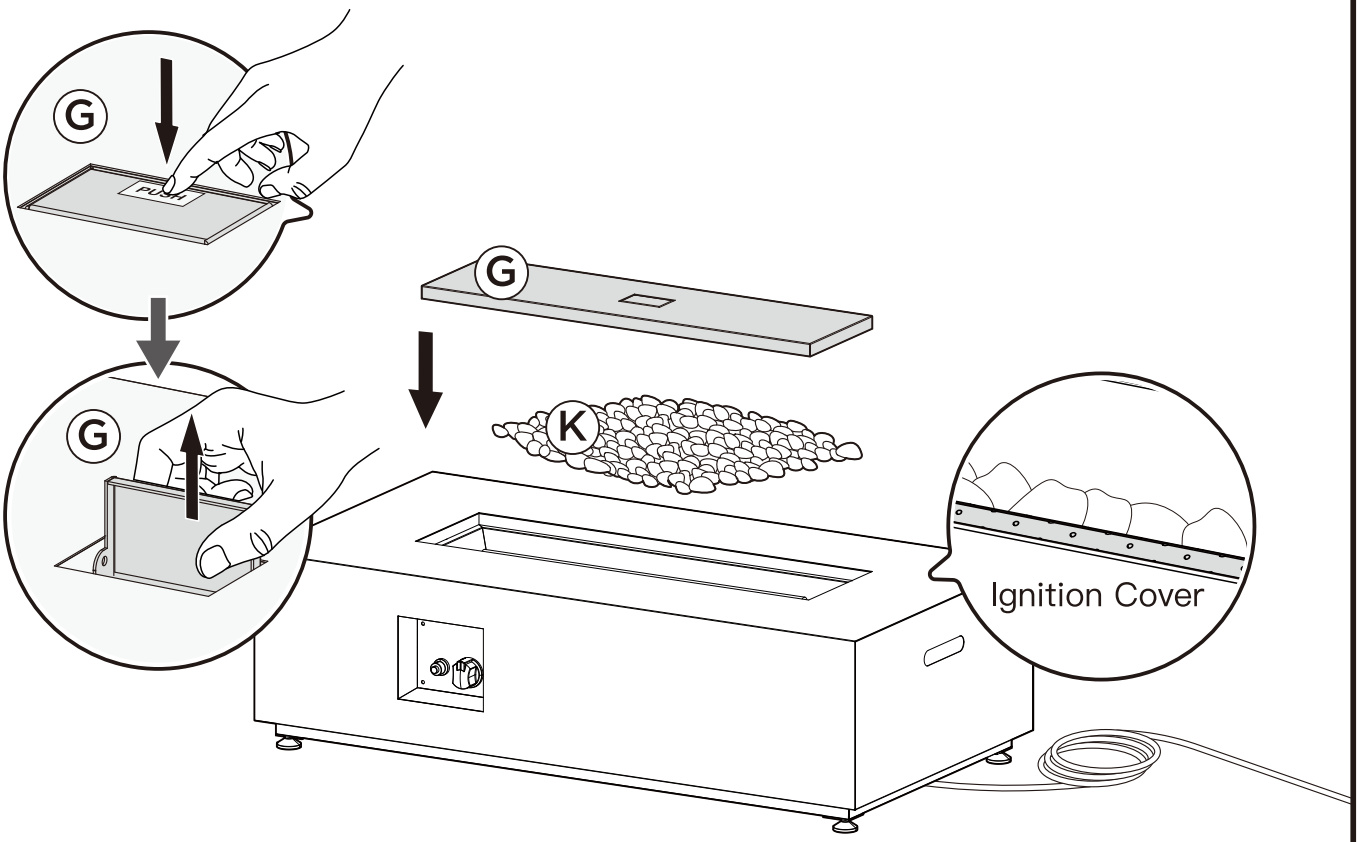

[G] x 1 [K] x 1

STEP 7

Note: The positive pole of the battery faces out.

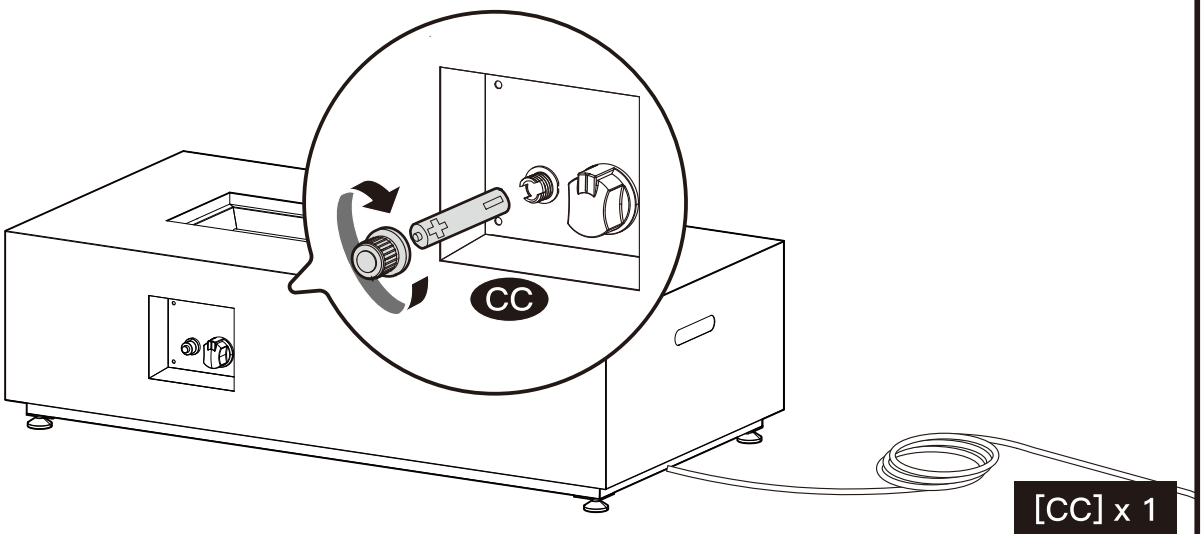

[CC] x 1

STEP 8

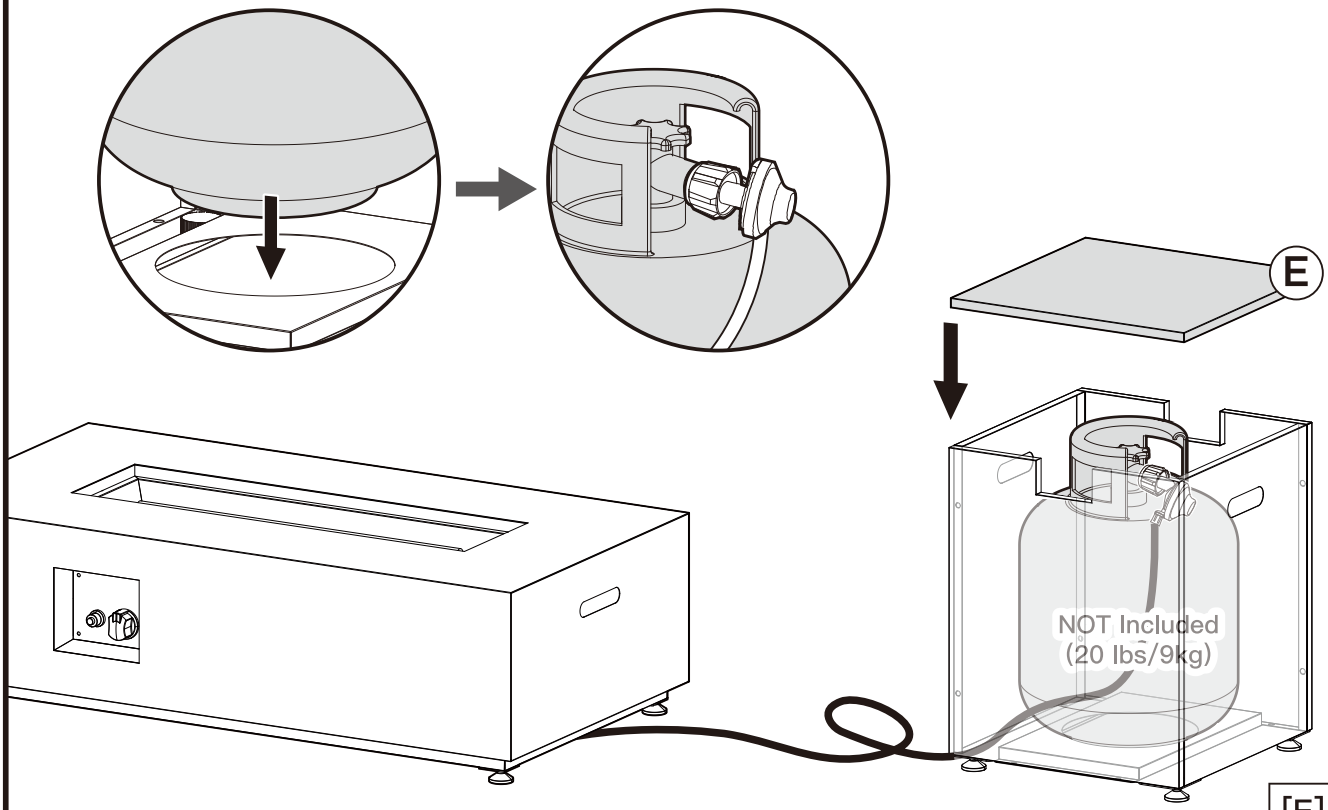

[E] x 1

Note: Push in both the igniter button and the control knob. Slowly turn the control knob to the “LOW” position. After the burner is lit, release the igniter button but keep holding the control knob for 3–5 seconds to heat up the thermocouple. The control knob should be pushed in to adjust the flame when it is between the position of “OFF” and “LOW”.

STEP 9

Note: Do not cover the top lid or use the dust cover until the unit has cooled completely.

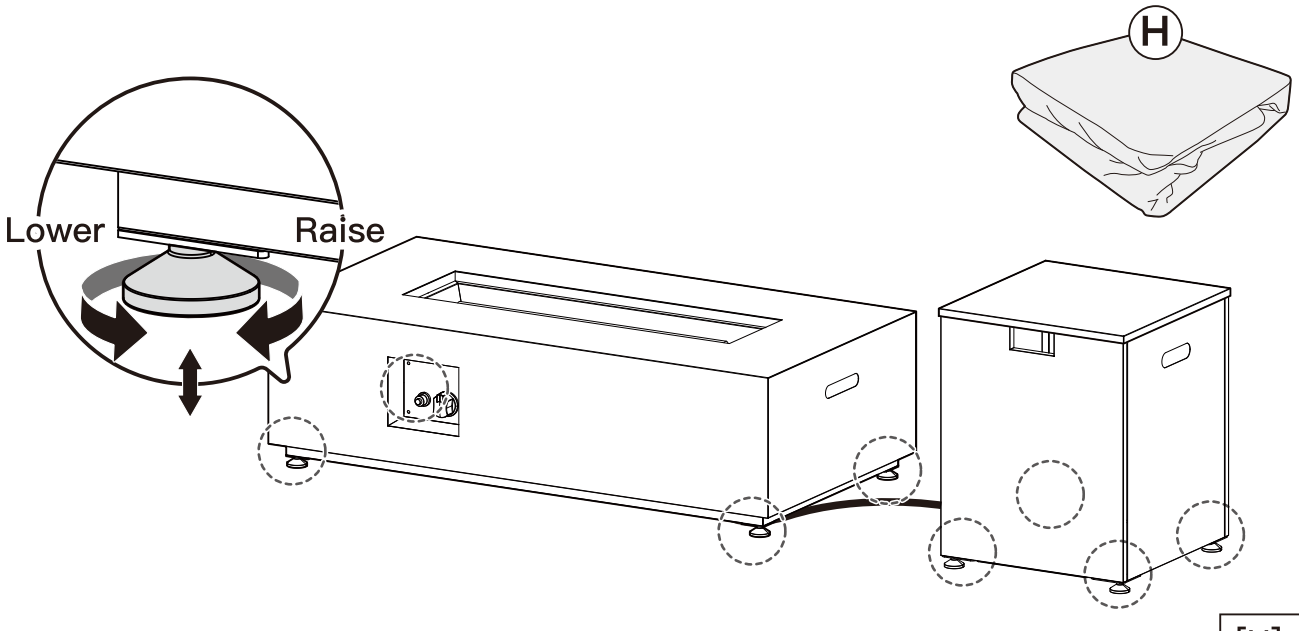

[H] x 1

OPERATION INSTRUCTIONS

⚠ WARNING	Never use this appliance for other than the intended use. **DO NOT** use this appliance to prepare food.

Initial Lighting: When lit for the first time, the appliance emits a slight odor. This is a temporary condition caused by paints and lubricants used in the manufacturing process but does not occur again. Simply run the main burner on high for approximately 30 minutes.

⚠ WARNING

Children and adults should be alerted to the hazards of high surface temperatures and should stay a safe distance from the appliance to avoid burns or clothing ignition. The appliance comes with a heat shield which is an important safety component preventing contact with the fire pit when adjusting the propane valve.

Children should be carefully supervised when they are in the area of the appliance.

Clothing or other flammable materials should not be hung from the appliance, or placed on or near the appliance. The area above the fire pit may be extremely hot. Direct contact with these surfaces should be avoided in order to prevent burns or clothing ignition.

Any guard or protective device removed for servicing the appliance must be replaced prior to operating the appliance. Installation and repair should be done by a qualified service person.

The appliance should be inspected before each use and at least annually by a qualified service person. More frequent cleaning may be required as necessary. It is imperative that the control compartment, burners and circulating air passageways of the appliance be kept clean.

⚠ WARNING

Never use the appliance while it is raining. Always turn the appliance off when raining.

Never use the appliance if the burner is damaged. Inspect the burner before each use. Ensure that no debris such as leaves, grass or other objects have entered or are on the appliance. If the burner is damaged, it must be replaced prior to using this appliance with a replacement burner specified by the manufacturer.

Inspect the hose assembly before each use. If there is evidence of excessive abrasion or wear, or if the hose is damaged, it must be replaced prior to using the appliance with a replacement hose assembly specified by the manufacturer.

⚠ WARNING

Any modification to the appliance may compromise the safety of this appliance. Special concern is as follows:

Do not bypass the thermocouple safety.

Do not operate the appliance if any parts have been under water. Immediately call a qualified service technician to inspect the appliance and replace any part of the control system, and any gas control, which has been under water.

GAS CYLINDER CONNECTION

Connect hose and regulator to cylinder. The propane gas and cylinder are sold separately. Use a standard 20 lbs propane cylinder only. Use this fire pit table only with a vapor withdrawal supply system. See Chapter 5 of the standard for storage and handling of liquefied petroleum gas, ANSI/NFPA 58. Your local library or fire department should have this book.

Storage of an appliance indoors is permissible only if the cylinder is disconnected and removed from the appliance. A cylinder must be stored outdoors in a well–ventilated area out of reach of children. A disconnected cylinder must have all dust caps tightly installed and must not be stored in a building, garage or any other enclosed area.

- The maximum inlet gas supply pressure: 250 psi. The minimum inlet gas supply pressure: 25 psi.
- The minimum hourly rate of 10000 Btu is required input rating for a fire pit table for automatic operation at rating less than full input rating.
- The pressure regulator and hose supplied with the appliance must be used.
- The installation must confirm with local codes or in the absence of local codes, with national fuel gas code, ANSI Z223.1/NFPA54, natural gas and propane Installation Code, CSA B149.1, or propane storage and handling code, B149.2.
- A dented, rusted or damaged propane cylinder may be hazardous and should be checked by your cylinder supplier.
- Never use a propane cylinder with a damaged valve connection.
- The propane cylinder must be constructed and marked in accordance with the specifications for LP gas cylinders of the U.S. Department of Transportation (DOT) or the standard for cylinders, spheres and tubes for transportation of dangerous goods and commission, CAN/CSA–B339.
- The cylinder must have a listed overfilling prevention device.
- The cylinder must have a connection device compatible with the connection for the appliance.
- The cylinder used must include a collar to protect the cylinder valve.
- Never connect an unregulated propane cylinder to the appliance.





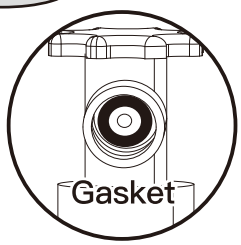

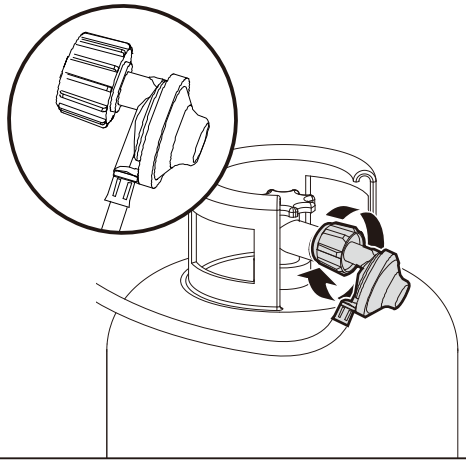

- Do not store a spare LP–gas cylinder under or near this appliance.
- Never fill the cylinder beyond 80 percent full.
- Place the dust cap on the cylinder valve outlet whenever the cylinder is not in use. Only install the type of dust cap on the cylinder valve that is provided with the cylinder valve. Other type of caps or plugs may result in leakage of propane.

Use a 1.3″ (33mm) external threaded cylinder. Internal threaded connections will not fit the fire pit. Before installation, check to see if the gas cylinder gasket is installed properly or has fallen off.

LEAK TESTING

⚠ WARNING	A leak test must be performed annually or if a part of the gas system is replaced.

⚠ WARNING	Never use an open flame to check for gas leaks. Be certain no sparks or open flames are in the area while you check for leaks. Sparks or open flames will result in a fire or explosion, damage to property, serious bodily injury, or death.

LEAK TESTING:

1. Make 2–3 oz. of leak detection solution by mixing one part liquid dishwashing soap with three parts water.
2. Make sure all fire pit and light valves are OFF.
3. Apply several drops of solution where the hose attaches to the regulator.
4. Apply several drops of solution where the regulator connects to the cylinder.
5. Turn the cylinder valve ON.

If bubbles appear at any connection, there is a leak:

1. Turn the cylinder valve OFF.
2. If the leak is at hose/regulator connection: Tighten the connection and perform another leak test. If bubbles continue to appear, please contact product support for assistance.
3. If the leak is at regulator/cylinder valve connection: Disconnect, reconnect, then perform another leak test. If you continue to see bubbles after several attempts, the cylinder valve is defective. Please contact product support for assistance.

If NO bubbles appear at any connection, the connections are secure.

Note: Whenever gas connections are loosened or removed, you must perform a complete leak test.

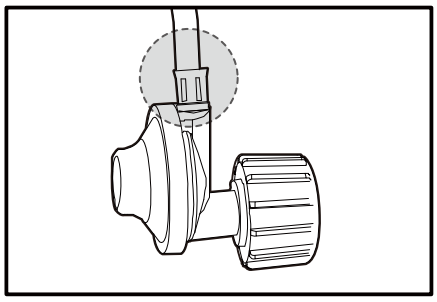

Hose/Regulator Connection

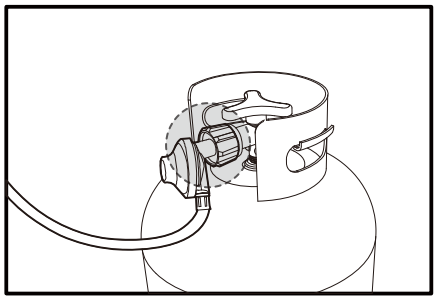

Regulator/Cylinder Connection

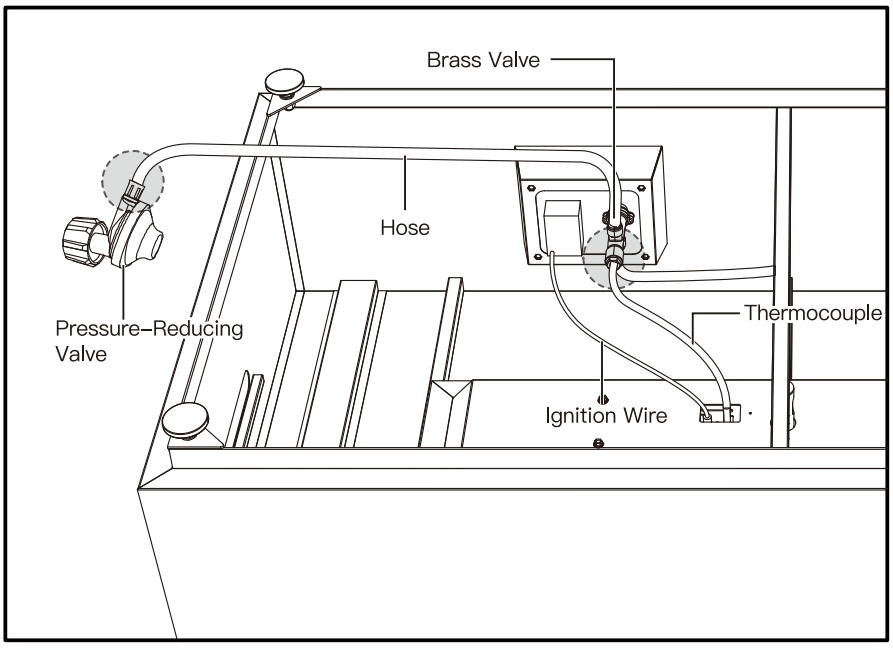

LIGHTING

CAUTION	Keep the outdoor gas appliance area clear and free from combustible materials, gasoline and other flammable vapors and liquids. Do NOT obstruct the flow of combustion and ventilation air. Check and clean burner/venturi tubes for insects and insect nests. A clogged tube can lead to a fire.

1. Make sure the battery is installed.
2. Make sure the control knob is in the “OFF” position (Figure 1).
3. Fully open LP cylinder valve.

   Note: For initial start or after any cylinder change, push in and hold the control knob for 5 seconds to purge air from gas lines before proceeding.
4. To ignite, first push in the igniter button and hold it without releasing it. (Figure 1).
5. Then push in the control knob without releasing it and turn it counterclockwise to the “LOW” position (Figure 2).
6. After the fire pit lights, release the igniter button but keep holding the control knob for 3–5 seconds to heat up thermocouple. Then release it. To increase the flame, turn the control knob counterclockwise in the direction of the “HIGH” position (Figure 3).

   Note: If burner fails to remain lit, all valves should be closed and a waiting period of at least 5 minutes should pass before attempting to light. After continuous ignition failure, wait for the gas concentration in the air to decrease before the next try.

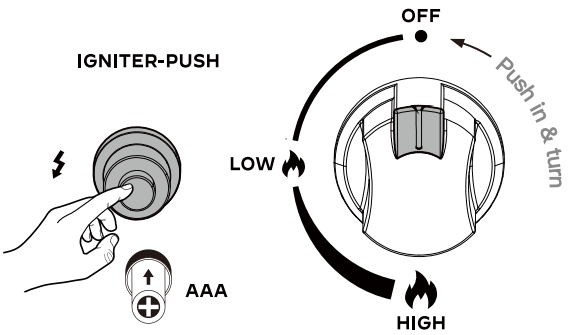

Figure 1

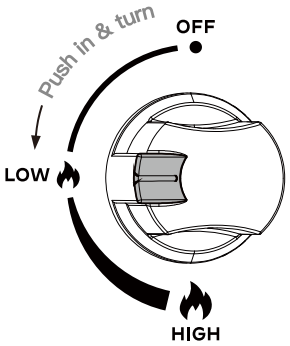

Figure 2

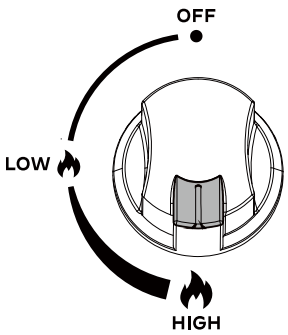

Figure 3

SHUT DOWN

1. Turn the control knob clockwise to the “OFF” position to turn off the burner.
2. Fully close the LP cylinder valve.

WARNING	The surface of the fire pit table can remain extremely hot for a period after use. Allow 40 minutes to cool and dissipate before covering or handling.

UNABLE TO IGNITE

1. The cylinder gas valve is not opened. Open the cylinder gas valve.
2. The battery is dead. Replace the battery.
3. The ignition pin is dirty or greasy. Clean up the ignition pin.
4. The ignition steps have not been followed properly. Do not release the control knob until you have held it for five seconds after ignition.

CLEANING THE IGNITION NEEDLE

1. Remove the ignition cover.
2. Wipe off any dirt from the ignition electrode.
3. Reinstall the ignition cover.
4. Use a dry cloth to wipe off any dirt on the ignition cover.

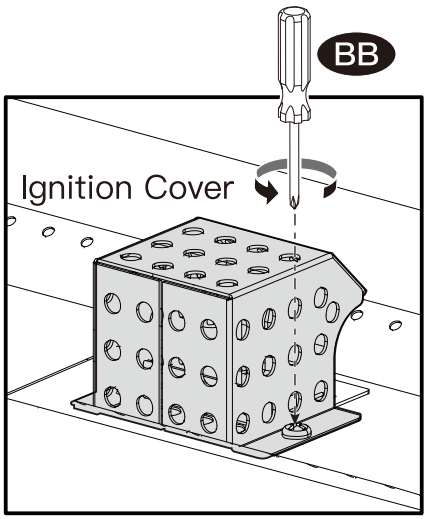

Figure 1

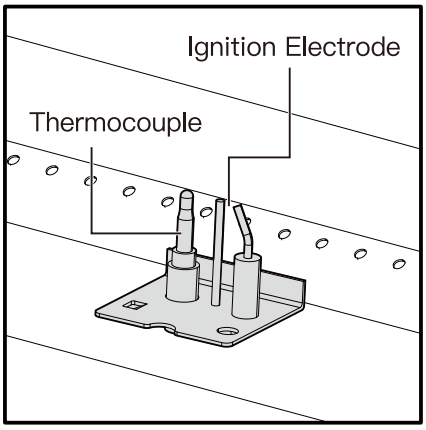

Figure 2

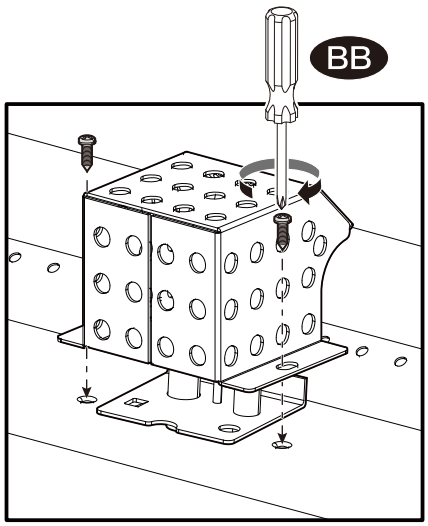

Figure 3

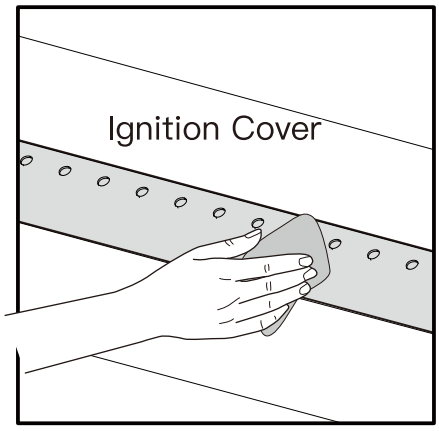

Figure 4

GOT A LOW FLAME:

If a low flame appears or flame height does not appear to be normally adjusted by the knob, the CSA excess flow safety mechanism has likely been triggered.

WHAT IS AN EXCESS FLOW SAFETY VALVE? (EFV)

The EFV is a safety mechanism contained within every propane gas regulator.

The purpose of the EFV is to restrict the gas supply if too much gas is flowing too quickly through the gas hose. For example, this could happen if the gas hose was severed.

It is normal that your Fire Bowl EFV trips if you open the cylinder valve too quickly or if you leave the Fire Bowl gas knob open before lighting, or both.

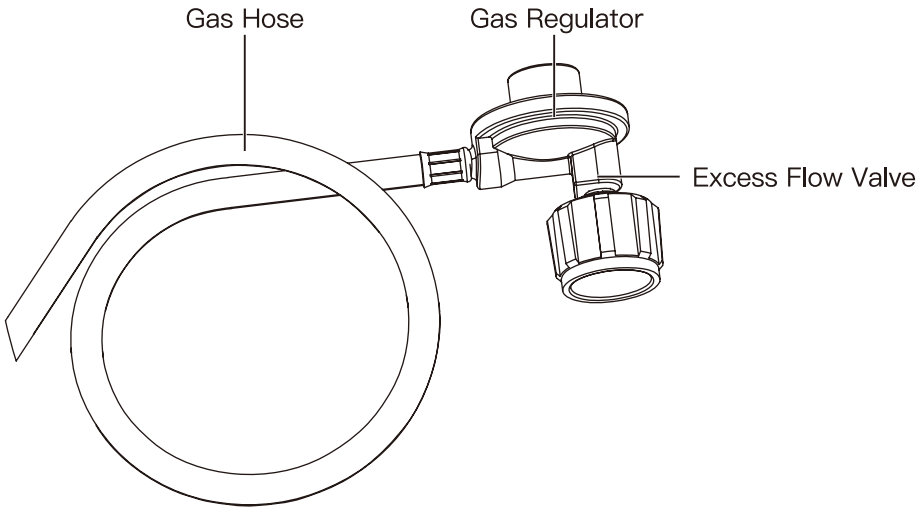

MAINTENANCE

Storage between uses:

1. Turn the control knob to the “OFF” position.
2. Fully shut the LP cylinder valve.
3. Store the fire pit table upright in an area sheltered from direct contact with inclement weather (such as rain, sleet, hail, snow, dust and debris).
4. If desired, cover the fire pit table to protect exterior surfaces and to help prevent clogged air passages.

Note: Wait until the fire pit is cool before covering.

Storage during periods of extended inactivity or when transporting:

1. Turn the control knob to the “OFF” position.
2. Disconnect the LP source and move to a secure, well–ventilated location outdoors. **DO NOT** store in a location that will exceed 120˚F (49˚C).
3. Store the fire pit table upright in an area sheltered from direct contact with inclement weather (such as rain, sleet, hail, snow, dust and debris).
4. If desired, cover the fire pit table to protect exterior surfaces and to help prevent clogged air passages.

Note: Wait until the fire pit table is cool before covering.

CARE AND CLEANING

To maximize the lifespan of your fire pit table, make sure you perform the following maintenance activities on a regular basis:

1. Keep exterior surface clean.
2. Use warm soapy water for cleaning. Never use flammable or corrosive cleaning agents.
3. While washing your unit, be sure to keep the area around the burner dry at all times. If the gas control is exposed to water, do NOT try to use it. It must be replaced.
4. Keep the appliance area free and clean from combustible materials, gasoline or other flammable vapors and liquids.
5. At least once a year, the unit should be inspected for the presence of spiders, spider webs or other insects.
6. Air flow must be unobstructed. Keep the control knob, the burner and circulating air passageways clean. Signs of possible blockage include:

   Gas odor with extreme yellow tipping of flame.

   The fire pit table does NOT reach the desired temperature.

   Heat glow is excessively uneven.

   Heat makes popping noises.
7. Spiders and insects can nest in burners or orifices. This dangerous condition can damage the fire pit table and render it unsafe for use. Clean burner holes by using a heavy–duty pipe cleaner. Compressed air may help clear away smaller particles.
8. Carbon deposits may create a fire hazard. Clean reflector, thermocouple, and emitter screen with a dry cloth if any carbon deposits develop.
9. The burner is made from stainless steel, but extreme heat and a corrosive environment can cause surface corrosion to occur. This can be removed with a brass wire brush. Inspect the burner at least annually for cracks, insect nests, excessive corrosion or any other damage. If the burner is damaged, it must be replaced with a burner specified by the manufacturer before the appliance is operated again.

Note: In a salt–air environment (such as near an ocean), corrosion occurs more quickly than normal. Frequently check for corroded areas and repair them promptly.

TROUBLESHOOTING

PROBLEM	CAUSE	SOLUTION
The burner won't light.	The battery is installed incor–rectly or the battery is dead.	Check the battery installation, or replace the battery.
	The propane cylinder is empty.	Replace the propane cylinder.
	The cylinder gas valve is not opened.	Open the cylinder gas valve.
	The regulator isn't connected securely to the cylinder.	Tighten regulator connection to the cylinder.
	Gas flow is obstructed.	Check to see if there is a blockage in the ignition cover or bends in hoses.
	The burner holes are dirty or clogged or there is cobwebs or debris in the air inlet.	Clean the burner holes and the air inlet.
	The igniter button is not pushed in.	To ignite, it requires to push in both the igniter button and the control knob. Question about this instruction above.
	The burner is not lit as instructed, causing the flame to go out.	Push in the control knob and slowly turn it to the "LOW" position. After the burner is lit, keep holding the control knob for 3–5 seconds to heat up the thermocouple. Question about this instruction above.
	The control knob is not in the "LOW" position.	Push in and turn the control knob to the "OFF" position, then light the burner as indicated in the ignition instructions.
	The thermocouple is askew or dirty. Or the thermocouple wires are loose or damaged.	Adjust or clean the thermocouple. Or please contact customer service.
	The electrode wire is loose or disconnected.	Reconnect the electrode wire to the back terminal of the igniter.
	The igniter pin and burner are wet.	Dry them with a soft cloth.
	The igniter pin is broken.	Please call technical support or email customer service.
	Brass valve failure.	
	Short circuit occurs in the electrode wire between the valve and igniter pin.	

PROBLEM	CAUSE	SOLUTION
Sudden drop or cutoff of gas flow.	The propane cylinder may be empty.	Check the propane cylinder. Replace the propane cylinder if it is empty.
	Failure to follow instructions to perform ignition.	Keep pressing the control knob for 3–5 seconds after successful ignition.
	The excess flow valve is tripped by an excess flow of gas.	1. Turn the control knob to the "OFF" position. Close the valve and disconnect the cylinder. 2. Push in and turn the control knob to the "LOW" position, then wait 1 minute. 3. Turn the control knob back to the "OFF" position. Reconnect the cylinder and light the burner as indicated in the ignition instructions.
	The thermocouple is askew or dirty. Or the thermocouple wires are loose or damaged.	Adjust or clean the thermocouple. Or please contact customer service.
The burner flame is low while the control knob is in the "HIGH" position.	Gas pressure is low.	Close the cylinder valve and re–fill the cylinder.
	Outdoor temperature is less than 40°F and tank is less than 1/4 full.	Use a full cylinder.
	The burner holes may be dirty or clogged or there may be cobwebs or debris in the air inlet.	Check the burner holes and air inlet for blockage. Clean them if there is a blockage.
The hose cannot be connected to the cylinder or the pressure–reducing valve is leaking.	The cylinder thread does not fit.	Only use an external threaded cylinder.
	The cylinder interface size does not fit.	Use gas cylinders with specifications of 1.3″ (33mm).
	The gas cylinder gasket is aging.	Replace the gas cylinder gasket.

There is no gas delivered to the burner.	The control knob deviates during transportation.	When igniting, press the control knob firmly to adjust its position.
	The control knob or the knob plug is damaged.	Please contact customer service.
	The gas cylinder gasket is aging.	Replace the gas cylinder gasket.
Thick black smoke.	Blockage in the burner.	Remove blockage and clean the burner.
	The flame is too big.	Incomplete combustion.
Carbon build-up.	Dirt or film on the burner.	Clean the burner.