SS13

Frameless Single Sliding Door with Soft-closing System

Simple design and more safety.
The shower door structure design is unique in USA market.
304 Stainless steel hardware.
3/8'' (10mm)tempered glass in United States standards.
Its width can be adjusted in about 4'' (100mm),
and reversible for left or right opening, with easy & quick installation.
After 100,000 times sliding test,
the door has 10 years warranty.

SS13

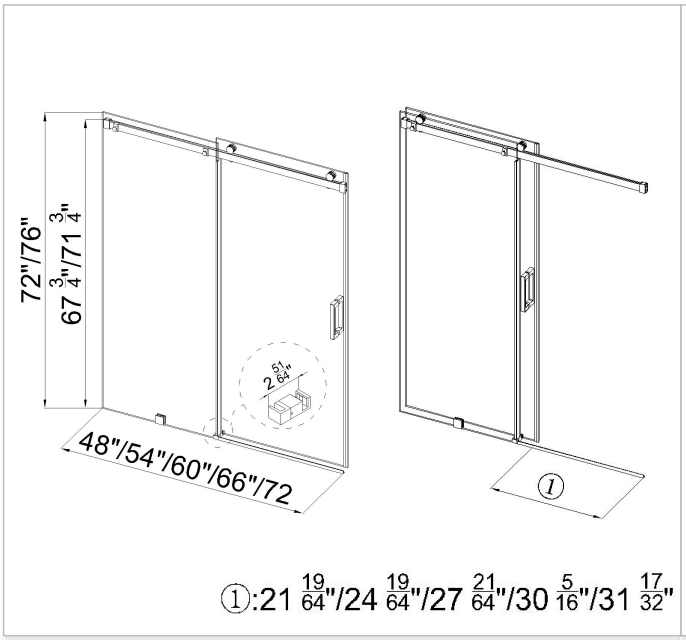

Wall to wall shower door

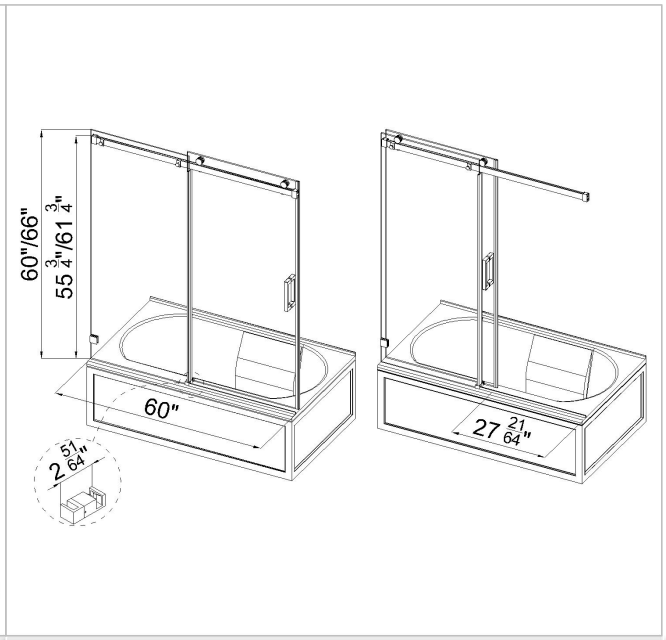

Bathtub door

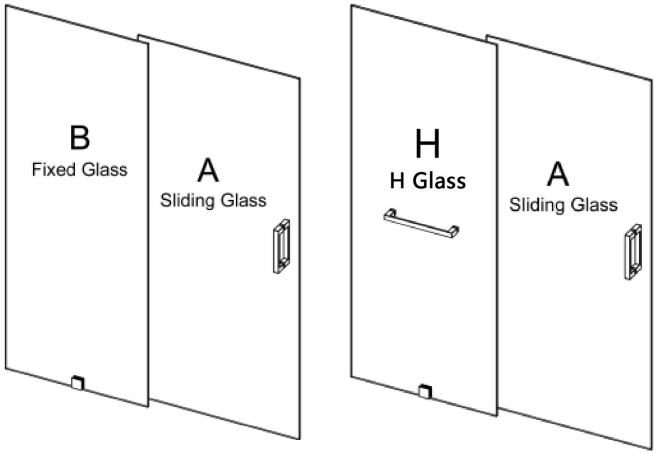

SS13

Chrome

Brushed Golden

Brushed Nickel

Matte Black

Easy-Clean Glass

Common Glass

http://mcocodusa.com
http://mcocodshowerdoor.com
Email: manager@mcocod.com

Tel: (321)-946-6293
Tel: (321)-947-4100

Warehouse: 309 Dodd Blvd SE,#100 Rome,GA30161

Warehouse: 16030 Phoenix dr, city of industry CA 91745