Desk

Product ID. 7A5QB

Scan for Support
support@garvee.com

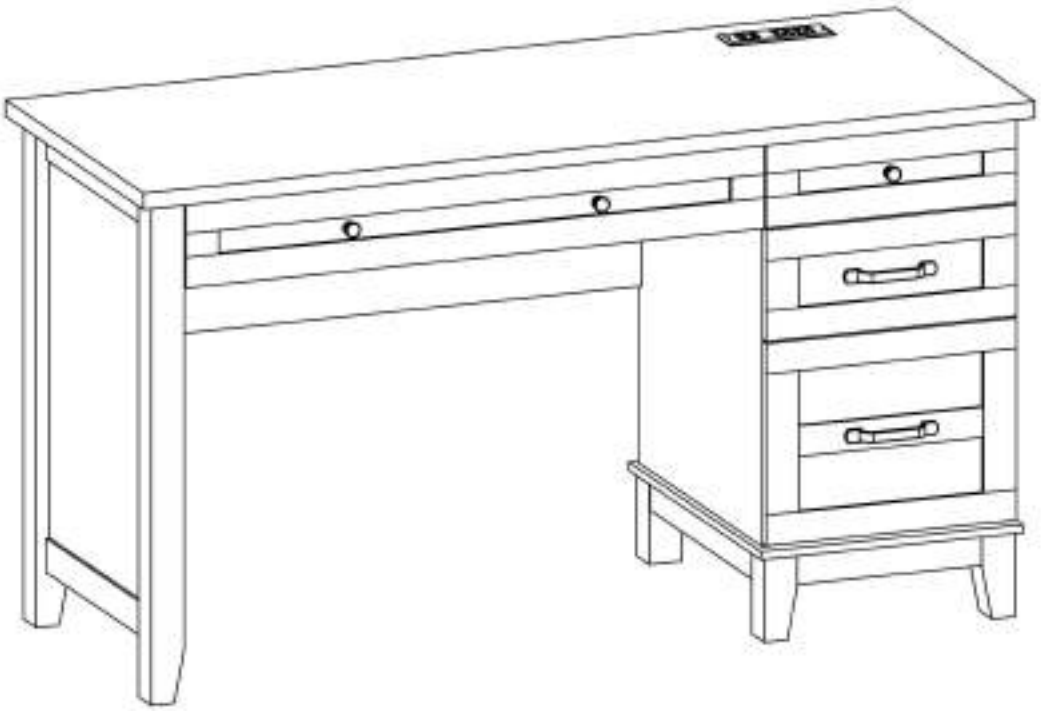

Distributed by
GARVEE.com

V260914BIWM

SPU:PHK_34VM

Assembly Instruction

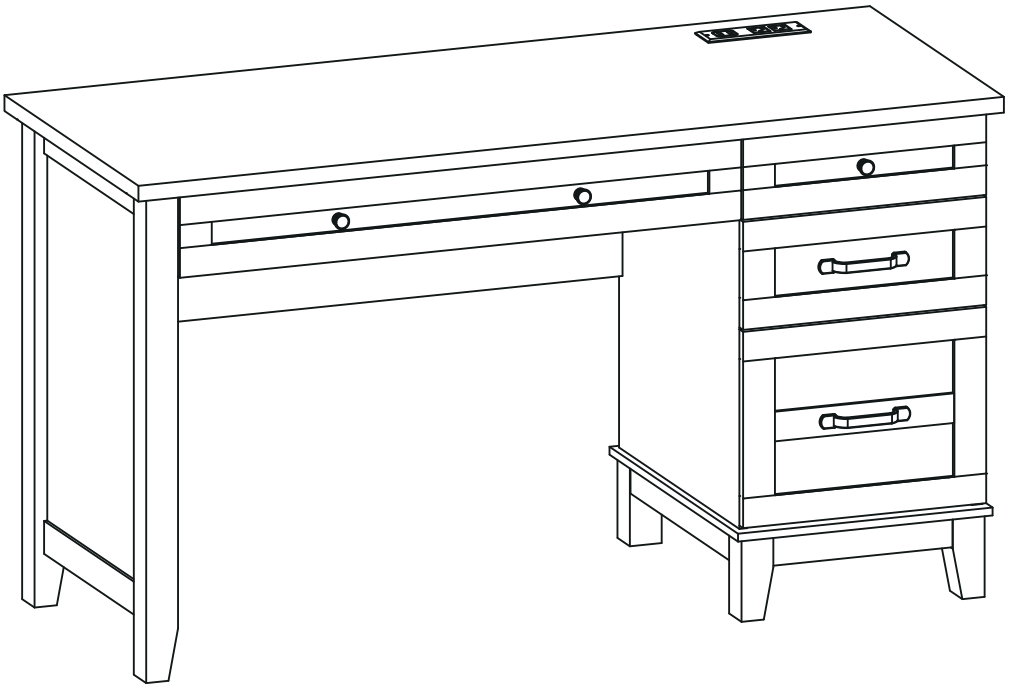

Team Assembly Recommended

Trouble shooting:

Missing / Wrong / Broken parts and installation issues

↓

Send email with your question pic ,order NO. and screenshot of order details to:

support@garvee.com

Respond within 24 hours

↓

Issue resolved

THIS INSTRUCTION BOOKLET CONTAINS IMPORTANT SAFETY INFORMATION. PLEASE READ AND KEEP FOR FUTURE REFERENCE.

Thank you for purchasing our products. Please contact us if you have difficulty with assembly or need replacement parts. Our customer service is here to assist you. Please attach your User Name or Order ID so that we can assist you better.

WARNING

Serious or fatal injury may occur from unexpected assembly or use.

1. During the assembly process, keep all parts away from babies or children.
2. Always securely fix this product to the wall. Make sure the wall area to be drilled is free from hidden electrical wires, water and gas pipes.
3. Use of tip-over restraints may only reduce, but not eliminate the risk of tip-over.
4. Unless specially designed to accommodate, do not set heavy objects on top of this product.
5. Place the heaviest items on the lowest drawers or shelves.
6. Never allow children to climb or bang on drawers, doors or shelves.

WARNING

Children have died from furniture tip-over.
To reduce the risk of furniture tip-over:

- ALWAYS anchor the anti-tip device to the wall. Installation is MANDATORY.
- DO NOT set TVs or other heavy objects on top of this product.
- NEVER allow children to stand, climb or hang on drawers, doors, or shelves.
- NEVER open more than one drawer at a time.
- Place the heaviest items in the lowest drawers.

Part List

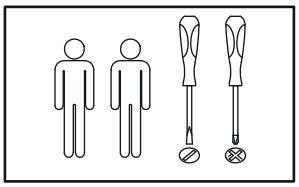

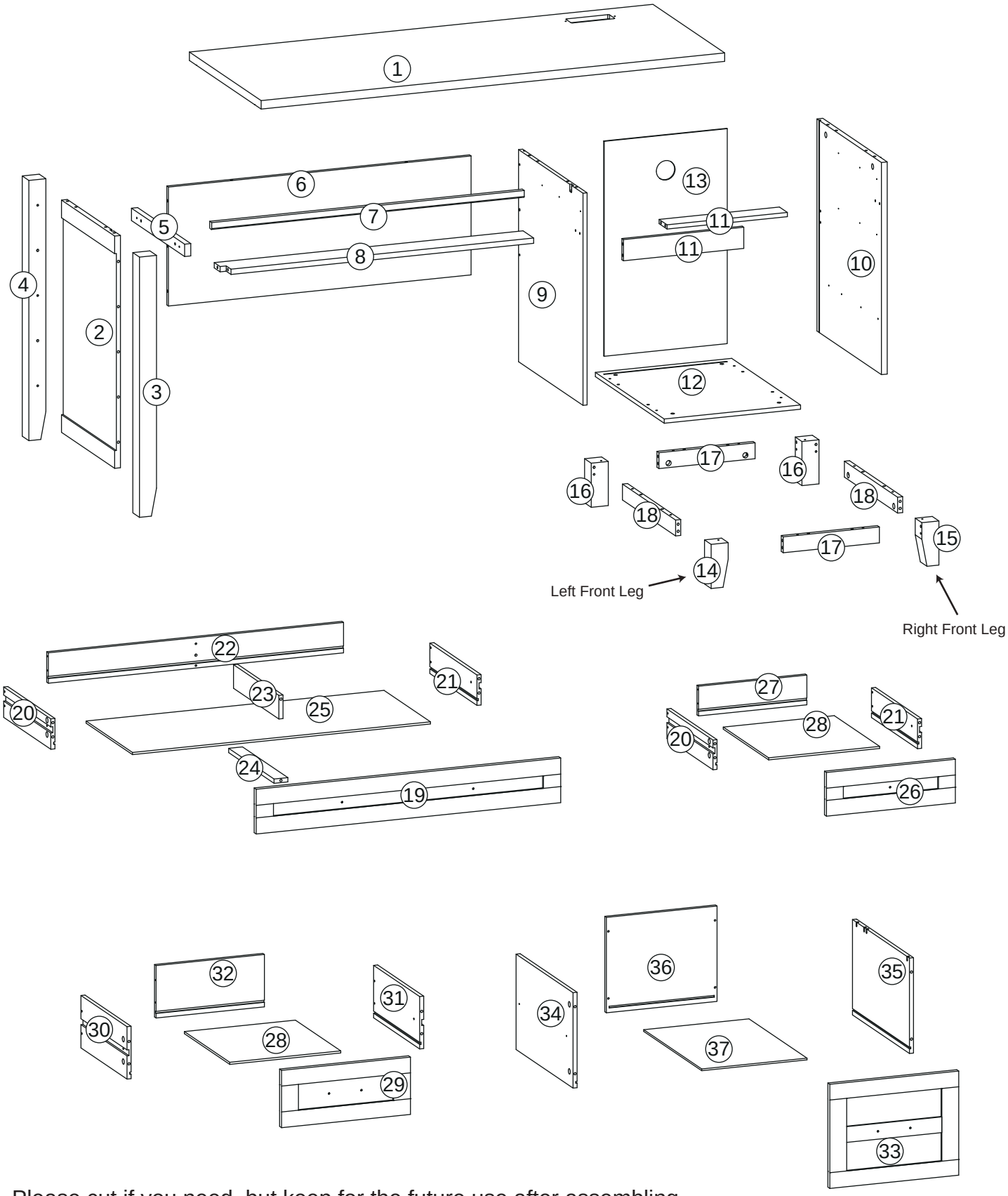

Please cut if you need, but keep for the future use after assembling

Part List

① ×1	② ×1	③ ×1	④ ×1
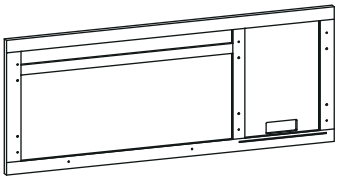	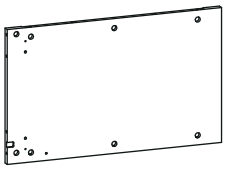	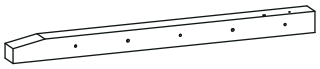	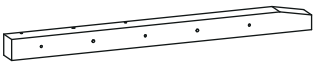
⑤ ×1	⑥ ×1	⑦ ×1	⑧ ×1
	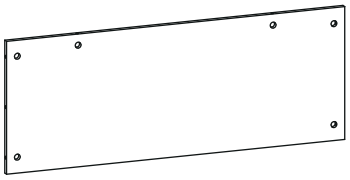		
⑨ ×1	⑩ ×1	⑪ ×2	⑫ ×1
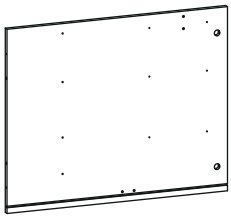	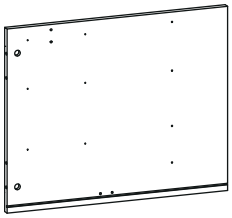	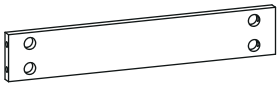	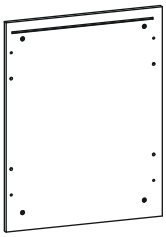
⑬ ×1	⑭ ×1	⑮ ×1	⑯ ×2
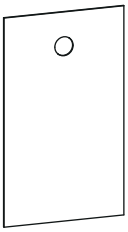		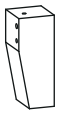	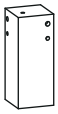
⑰ ×2	⑱ ×2	⑲ ×1	⑳ ×2
		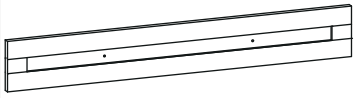	
㉑ ×2	㉒ ×1	㉓ ×1	㉔ ×1
	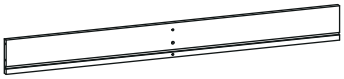	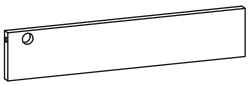	

Part List

25 ×1	26 ×1	27 ×1	28 ×2
	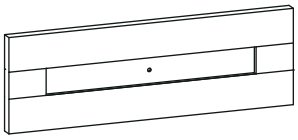	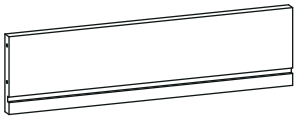	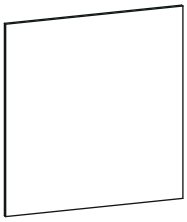
29 ×1	30 ×1	31 ×1	32 ×1
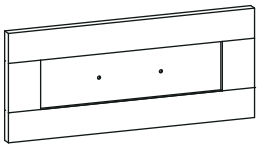	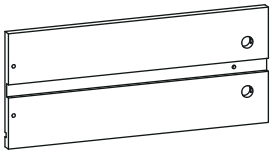	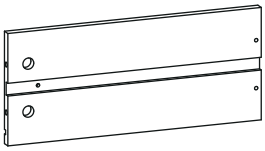	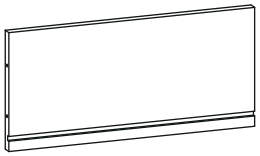
33 ×1	34 ×1	35 ×1	36 ×1
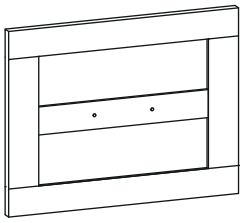	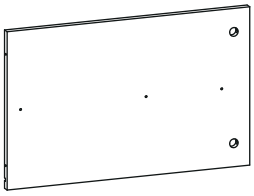	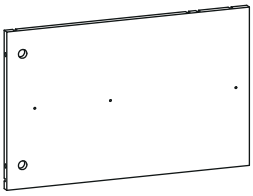	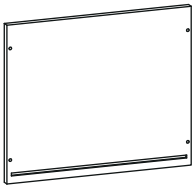
37 ×1			
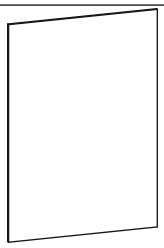			

Hardware List

A ×56+5	B ×56+5	C ×33+3	D ×18+1	E ×4
		6×30	M3×12	M3×14
F ×14+1	G ×26+2	H ×8	I ×5	J ×6
M4×12	M4×35	M4x50	M4×6	M4×10
K ×2	L ×2	M ×3	N ×4	O ×6
M4×12				
P ×2	Q ×6	R ×2	S ×1	T ×10+1
U ×2	V ×2	W ×2		
6×20	M4x20	M3×12		

Tools required (Please prepare by yourself before installing)

Phillips Screwdriver

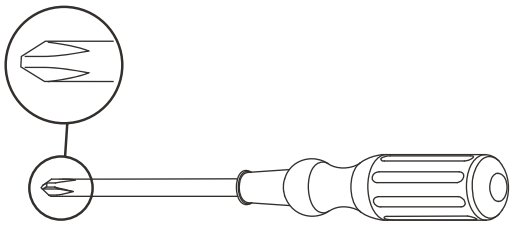

Straight Screwdriver

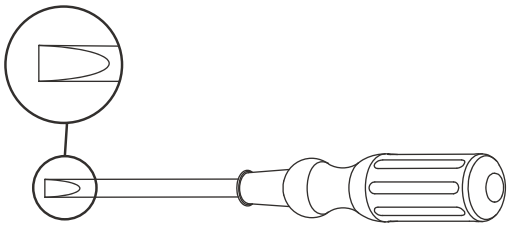

Power Tool NOT Recommended

To ensure proper assembly we have included the following guides:

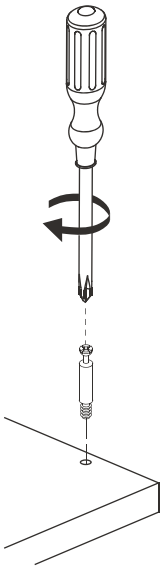

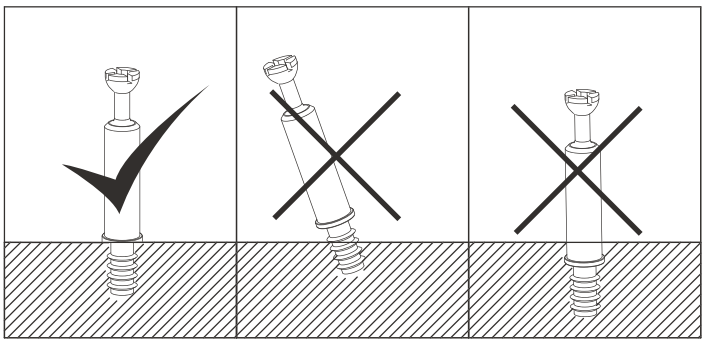

Insert threads of Locking Bolts completely，and stop once threads are no longer visible.

Do NOT overturn.

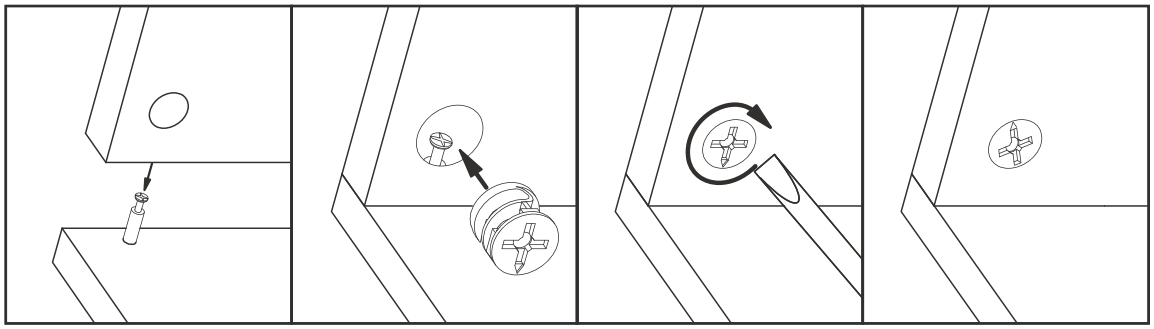

Reference this guide when assembling all Cam Locks.

Do NOT overturn.

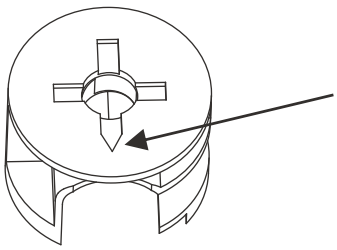

Notice:"pointer arrow"on cam face the Bolt when inserted the cam.

Separate the drawer slider into R-1/R-2

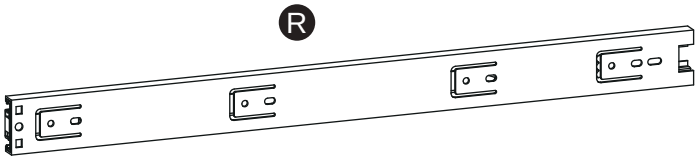

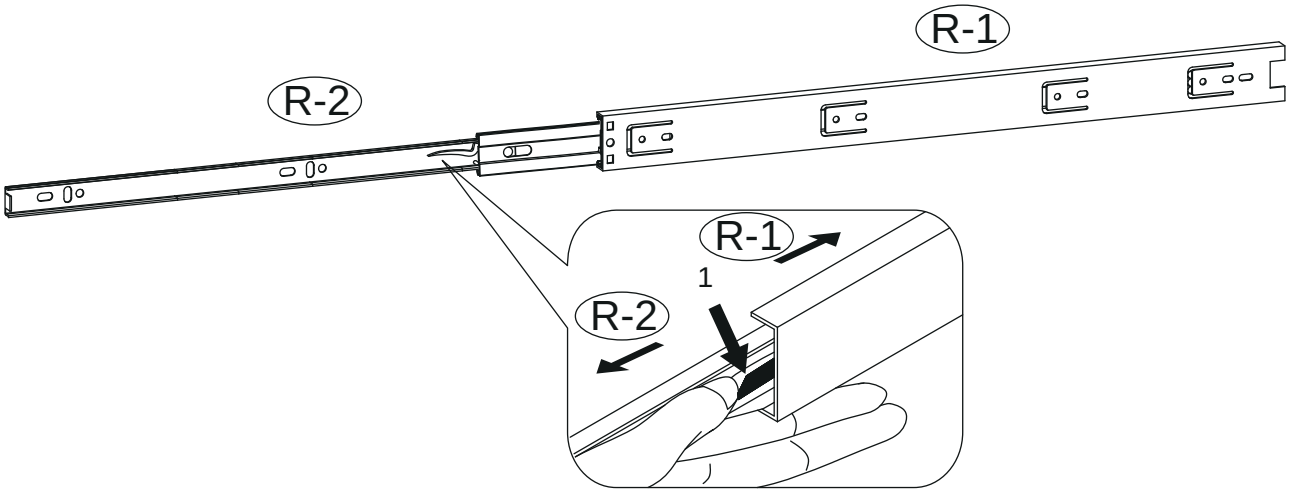

Press here to separate the drawer slider into R-1/R-2

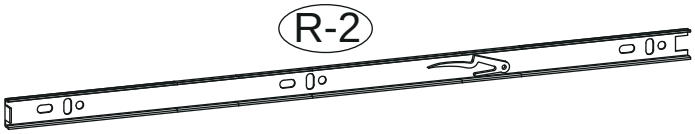

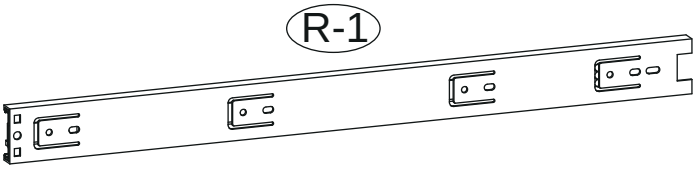

Step 1

A ×6	B ×6	C ×1	G ×6	I ×2	M ×2
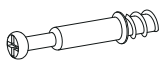					

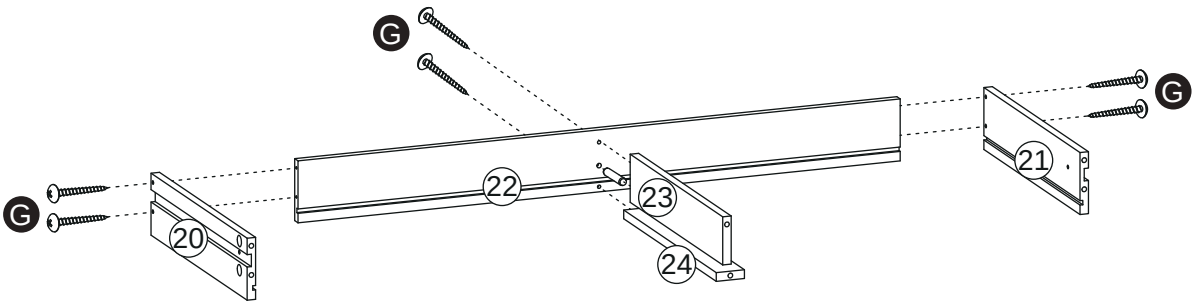

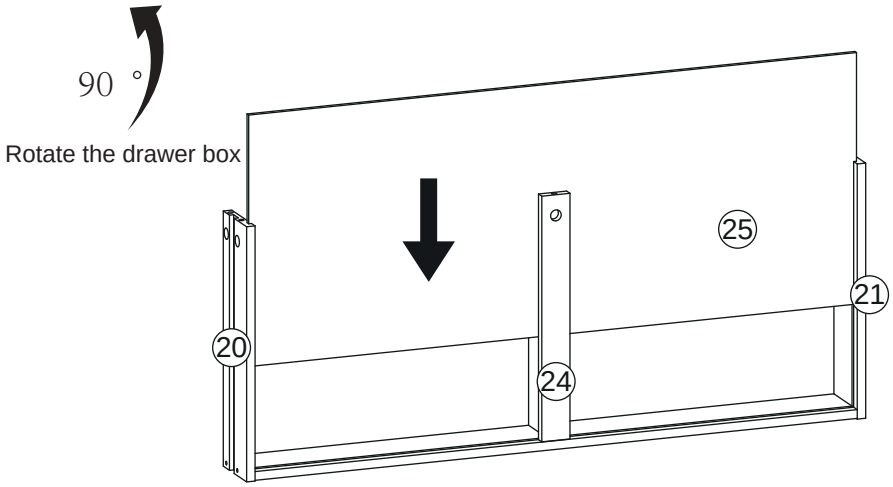

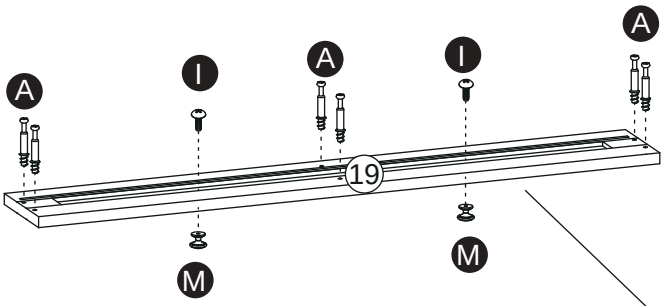

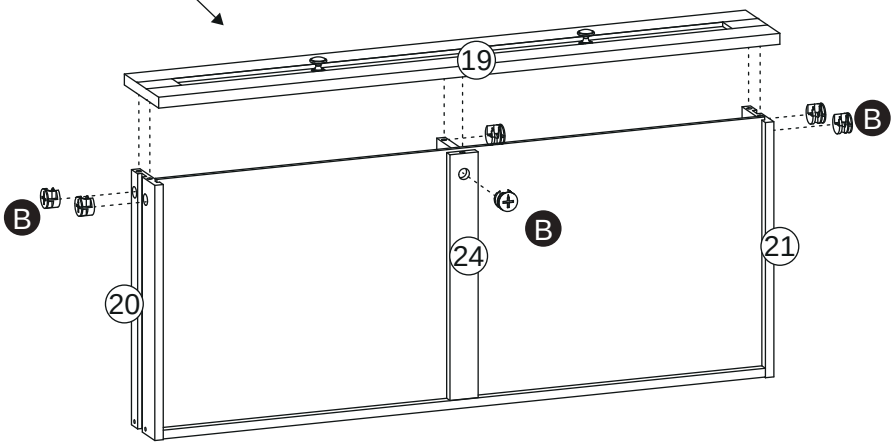

Step 2

A ×4	B ×4	G ×4	I ×1	M ×1
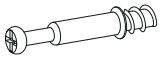		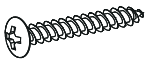		

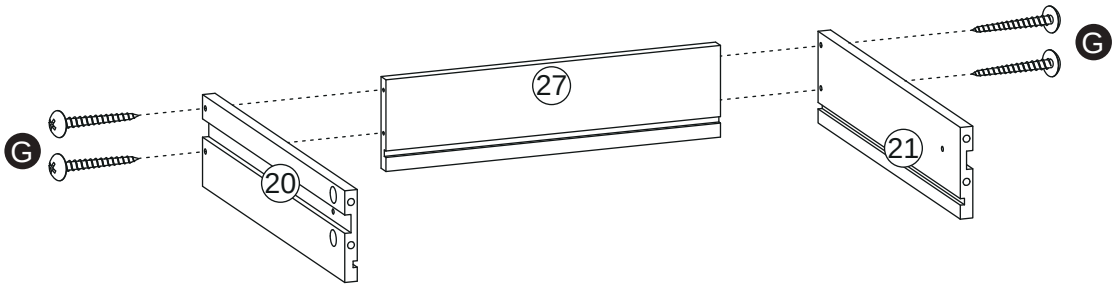

Rotate the drawer box

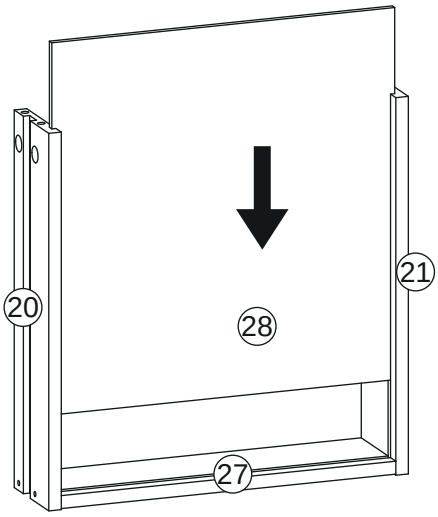

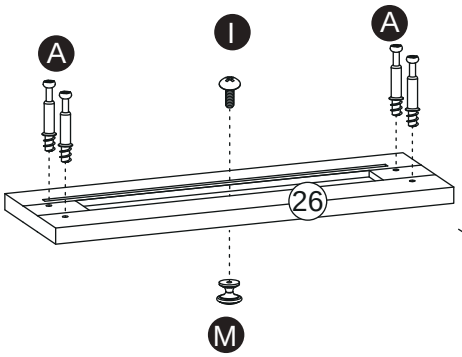

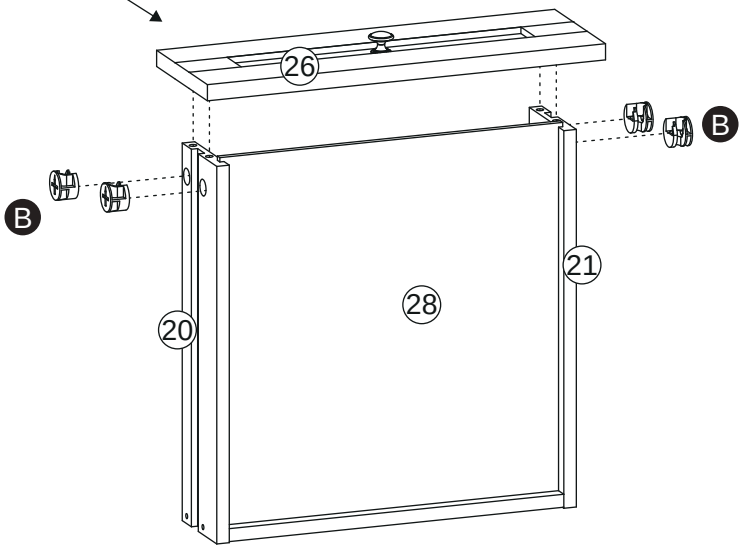

Step 3

A ×4	B ×4	G ×4	I ×2	L ×1
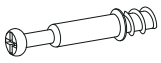		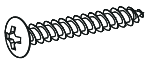		

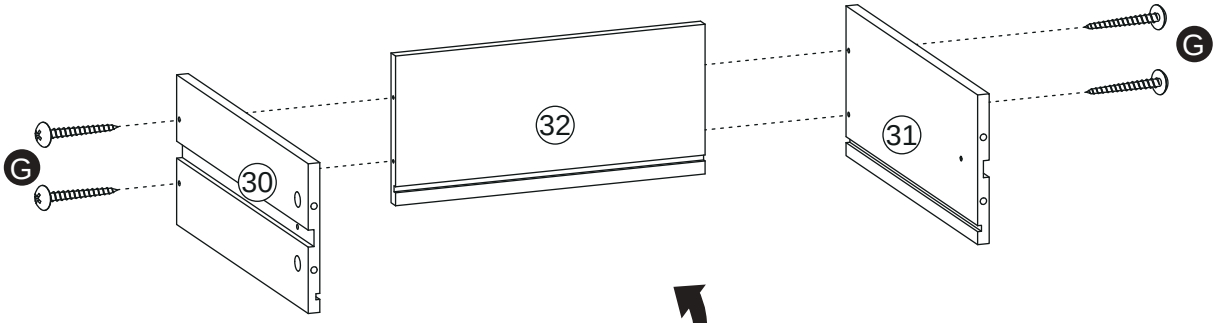

Rotate the drawer box

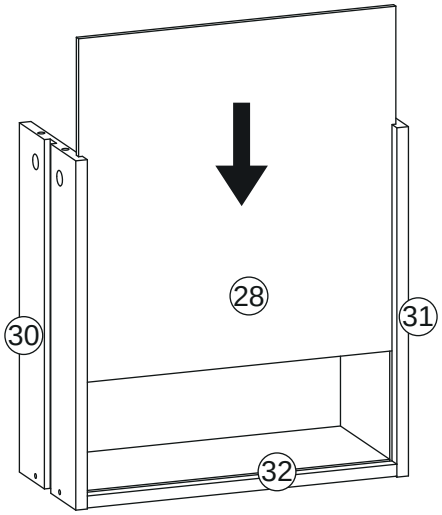

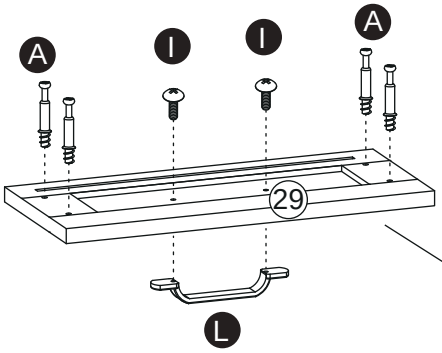

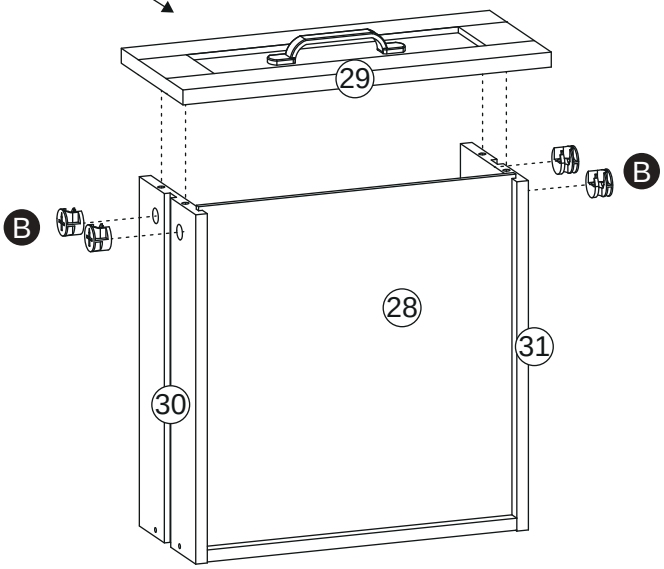

Step 4

A ×4	B ×4	G ×4	K ×2	L ×1
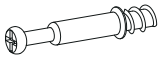			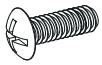	

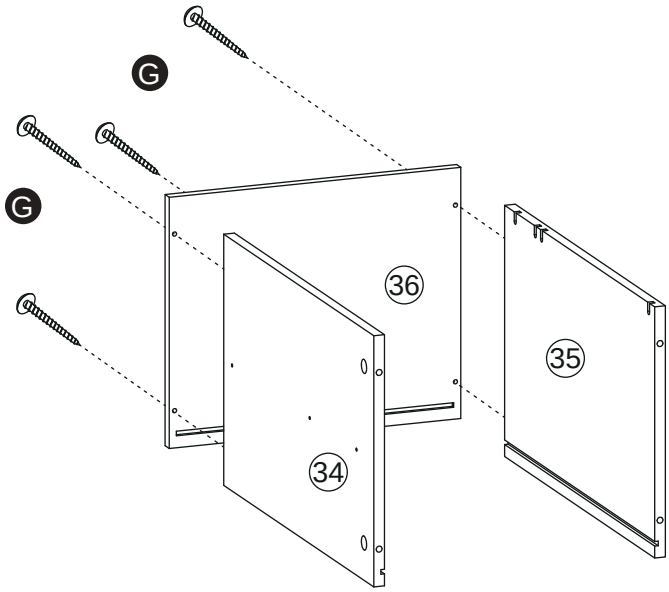

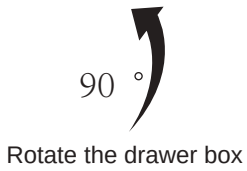

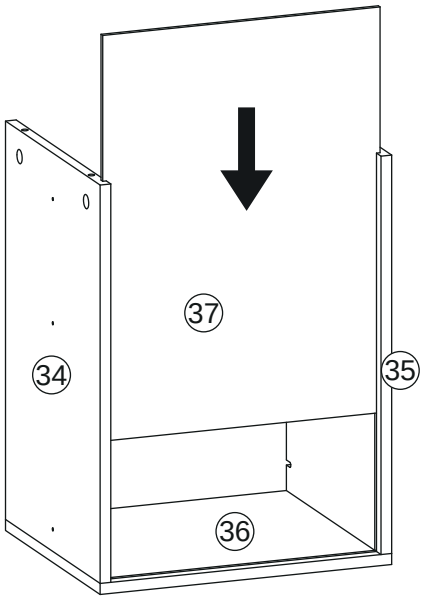

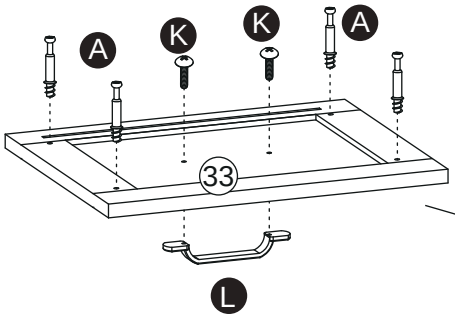

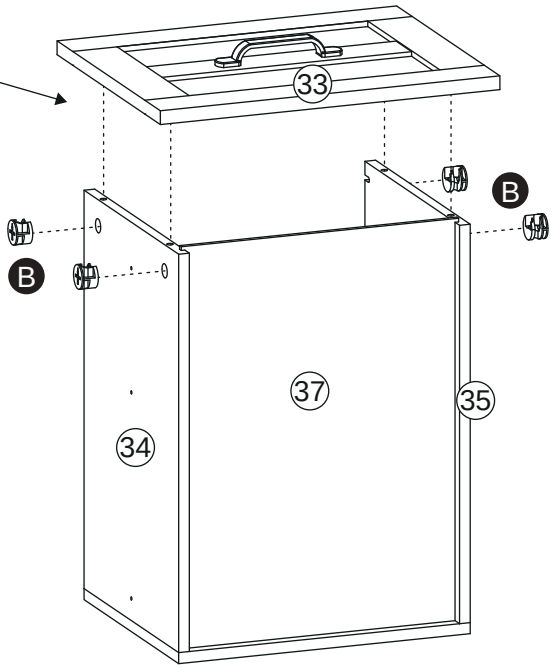

Step 5

F ×6	P ×2	R ×2
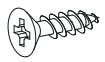		

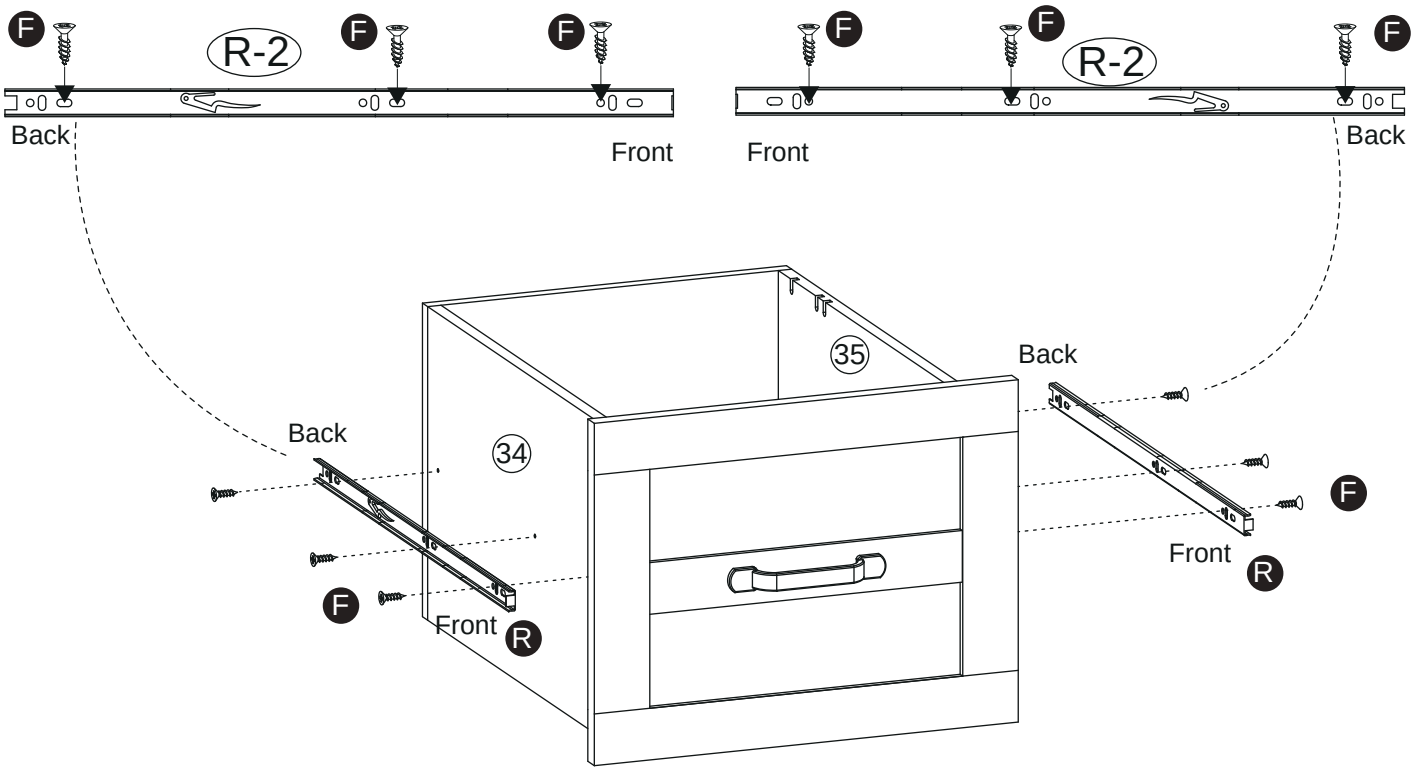

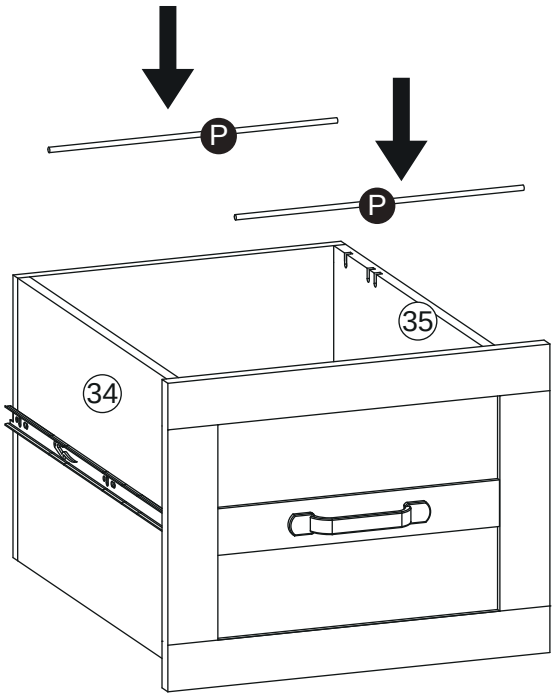

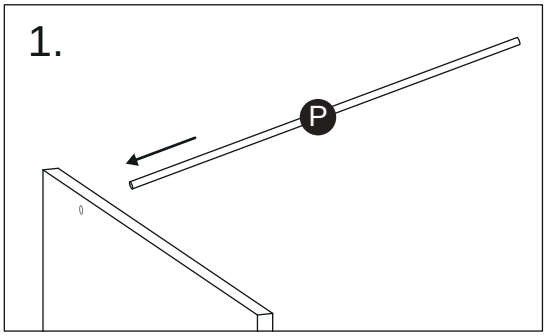

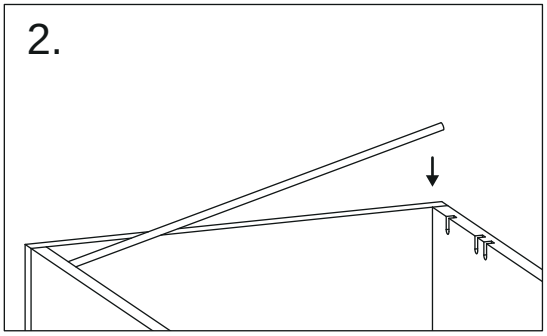

Step 6

A×8	D×9	F×4	Q×3	R×1
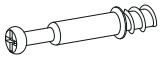	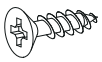	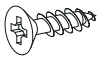		

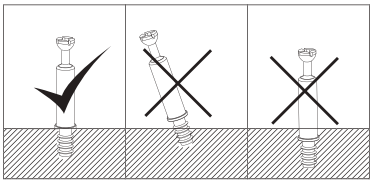

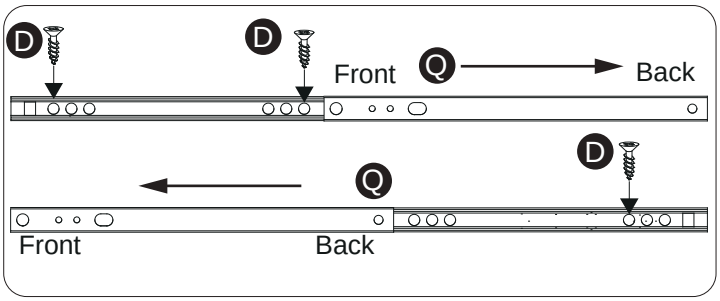

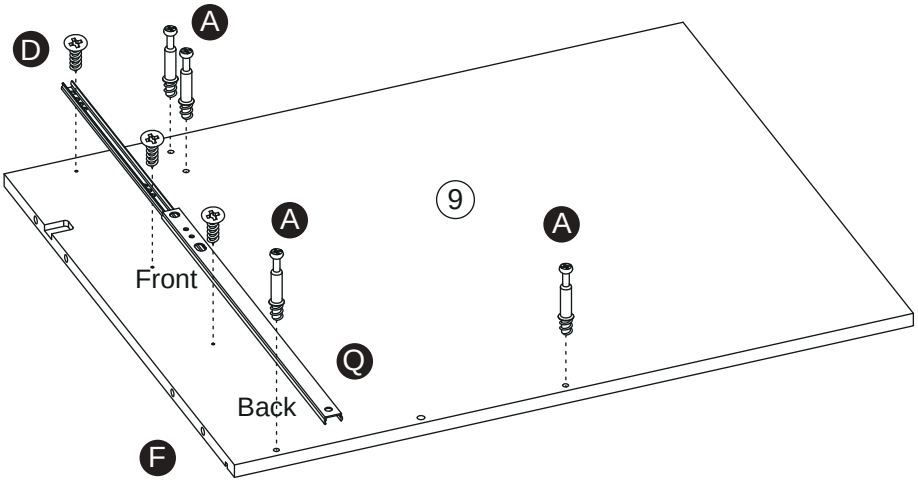

Turn the panel over after this step

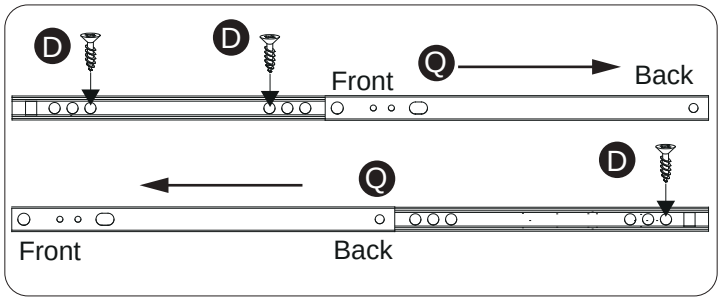

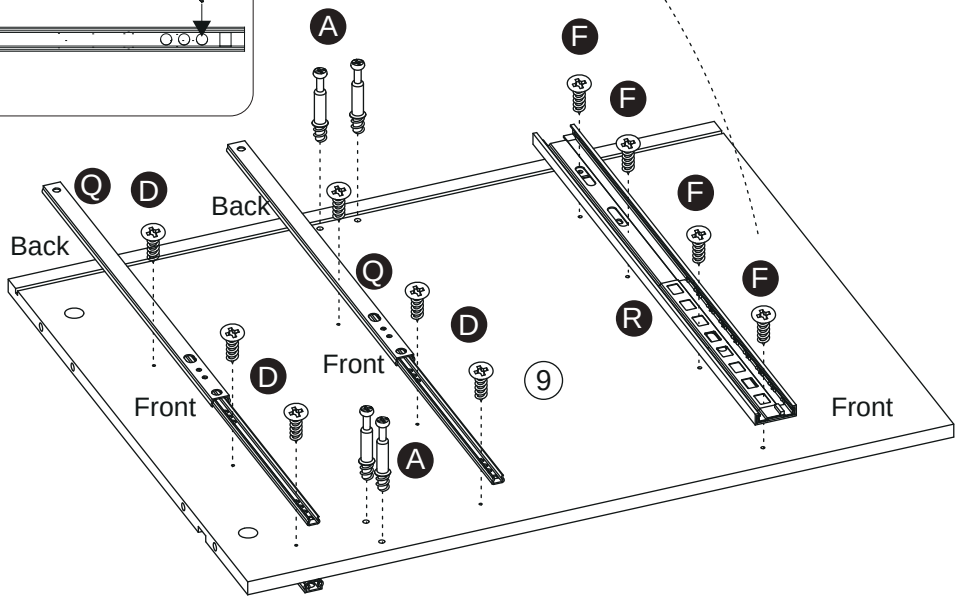

Step 7

A×4	D×6	F×4	Q×2	R×1
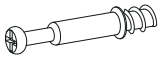	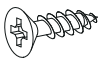	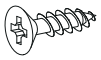		

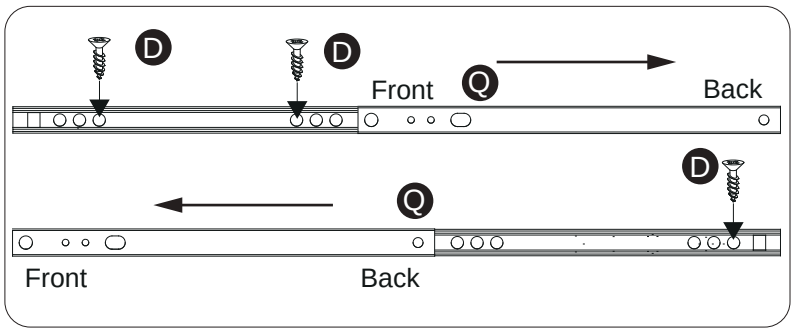

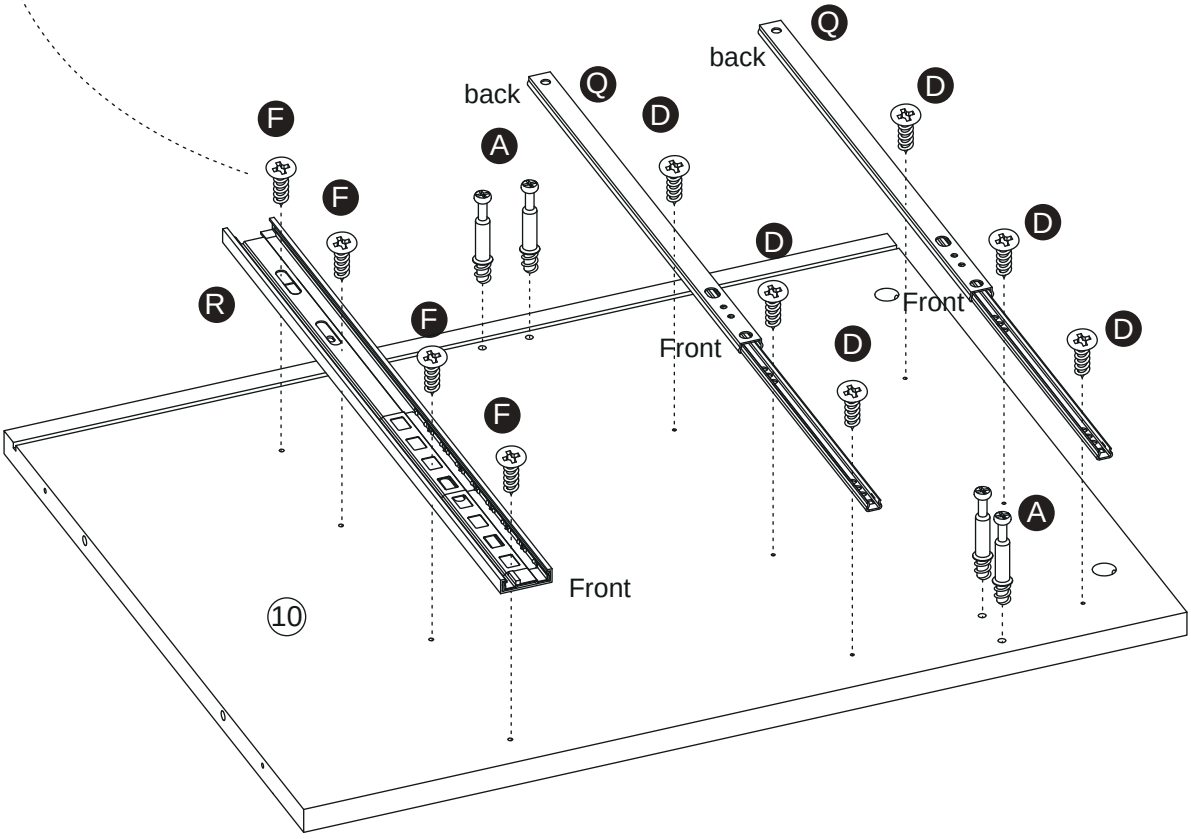

Step 8

B ×8	C ×4	G ×4

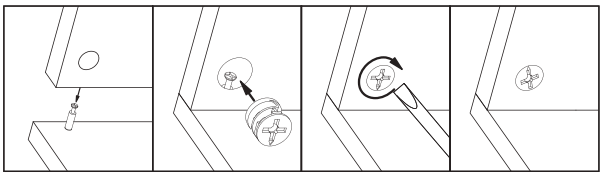

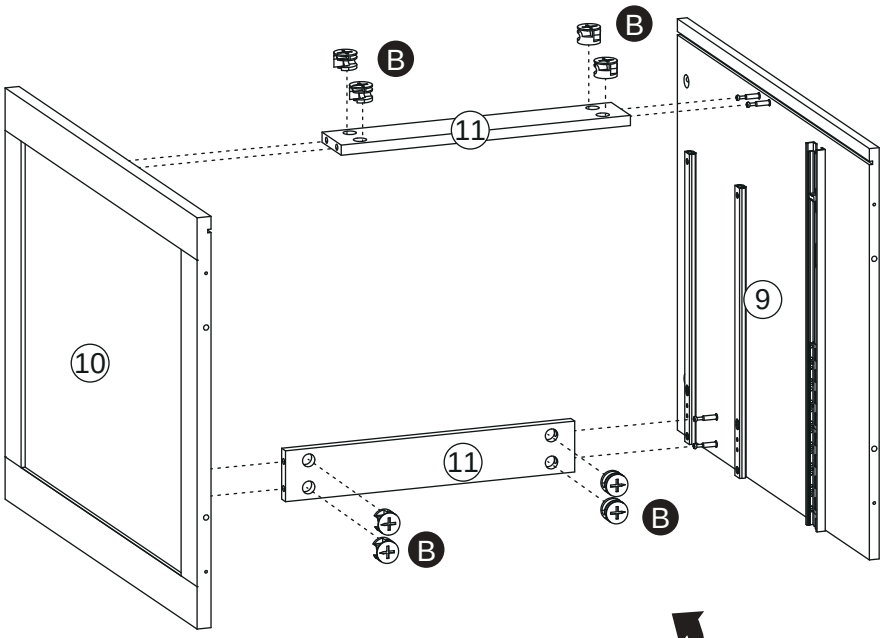

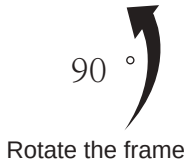

Rotate the frame

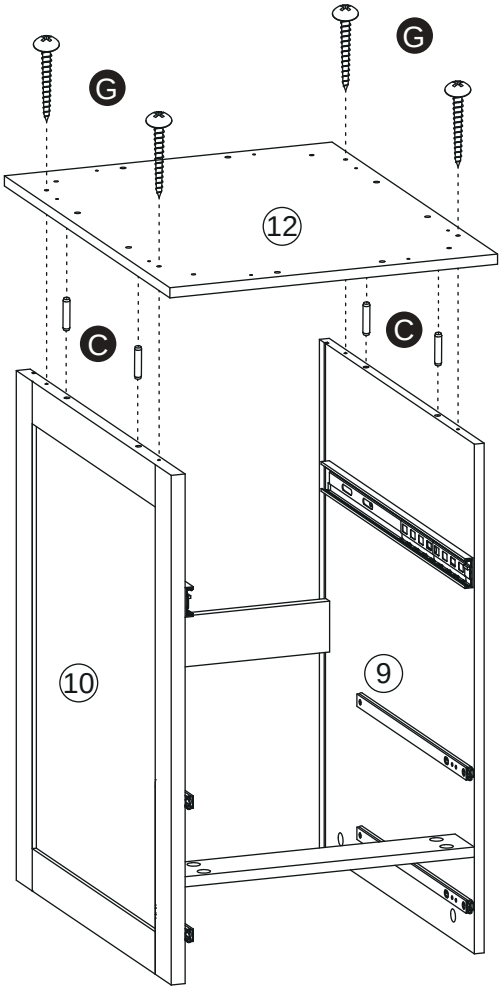

Step 9

A ×8

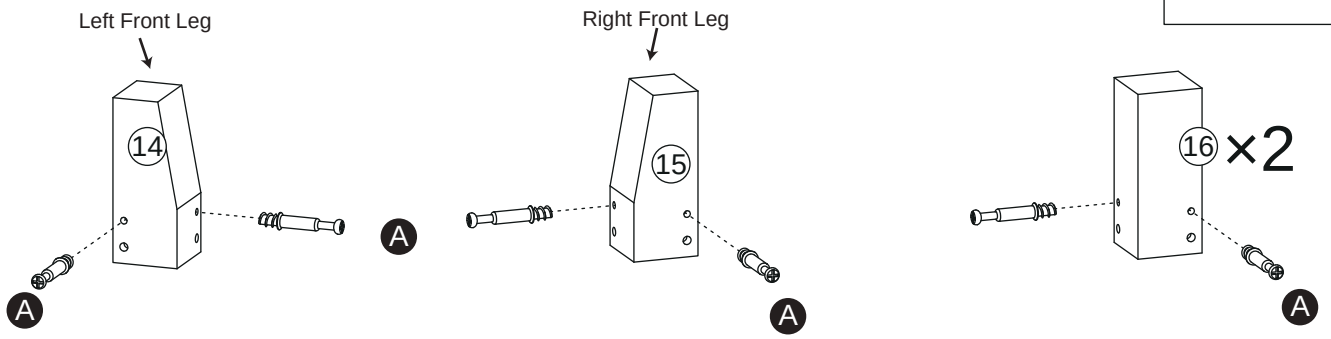

Step 10

B ×4

C ×4

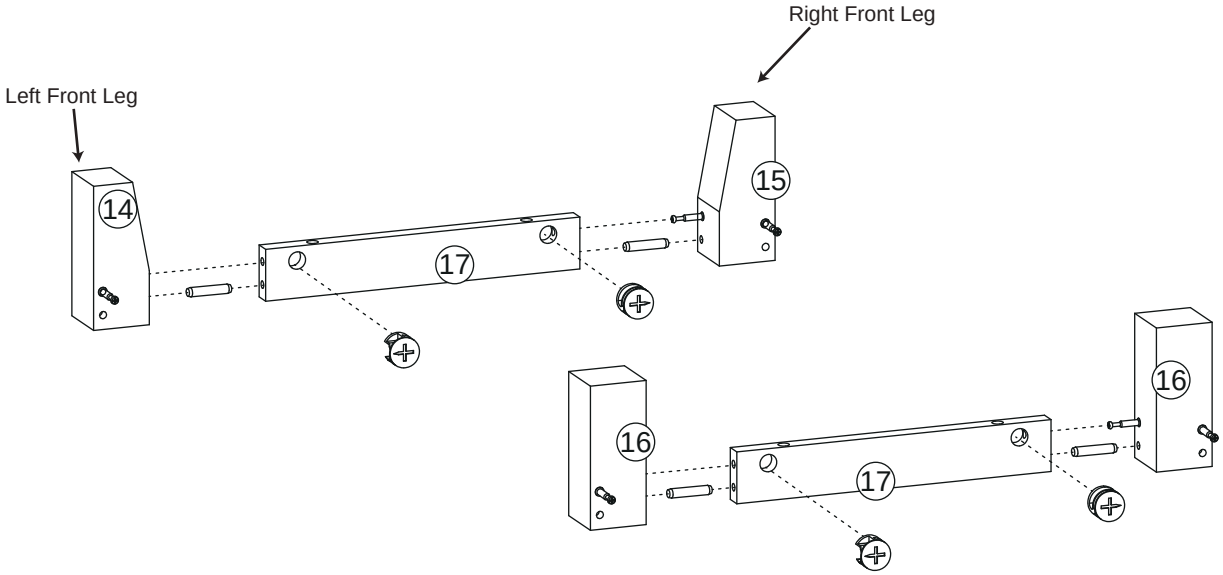

Step 11

B ×4

C ×4

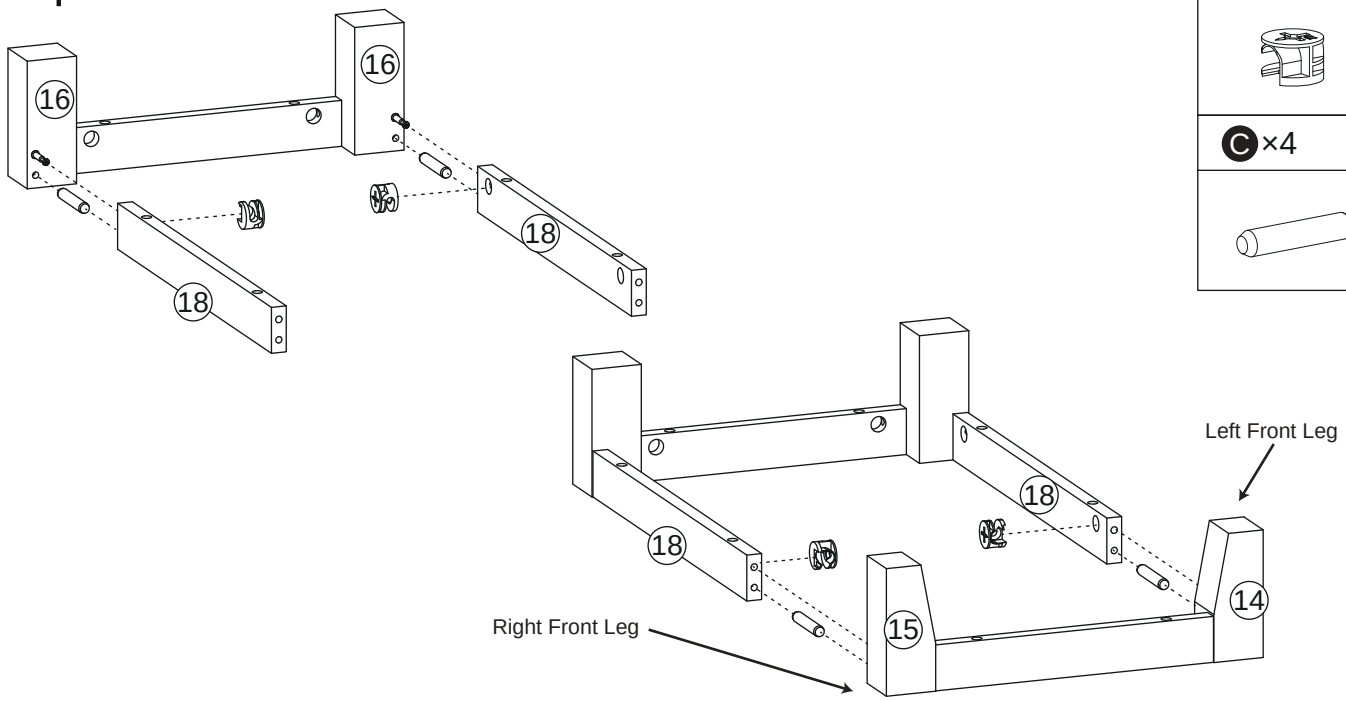

Step 12

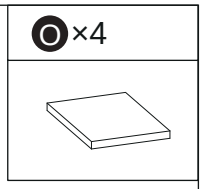

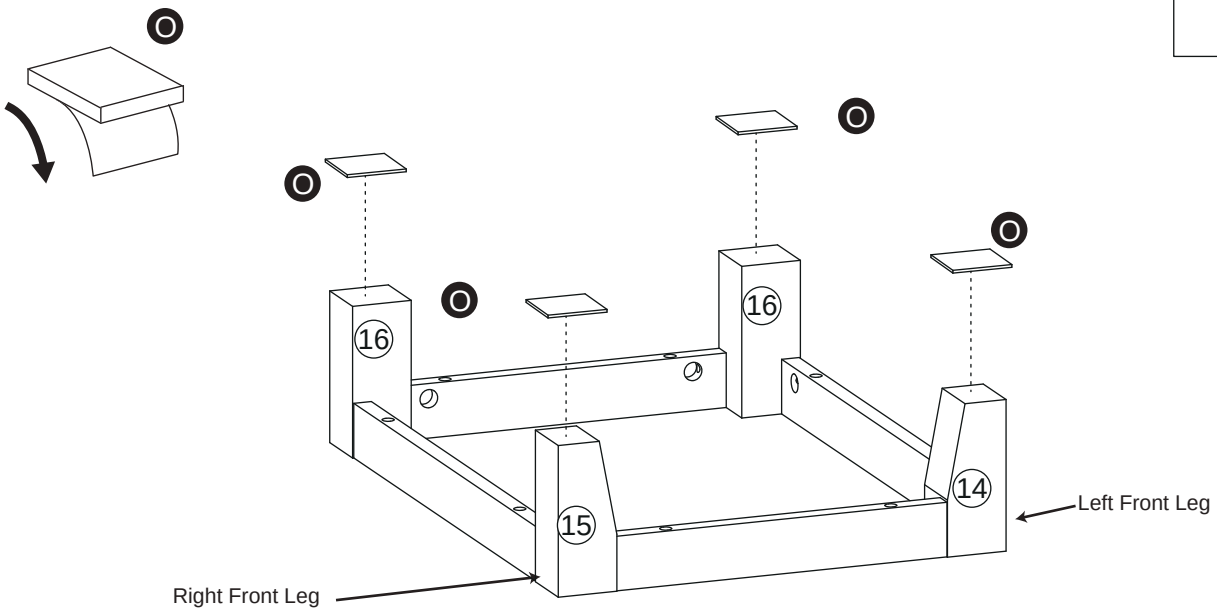

Step 13

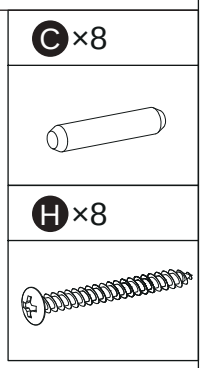

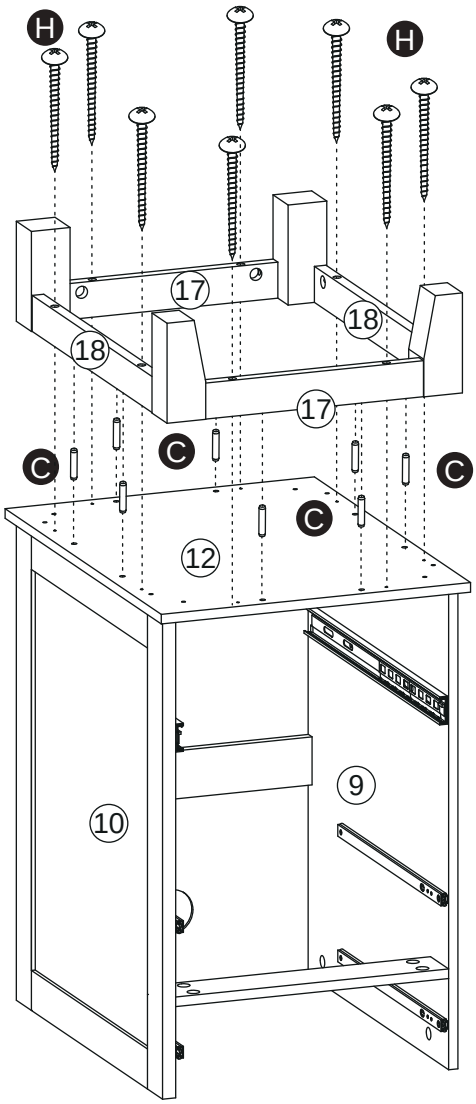

Step 14

G ×4

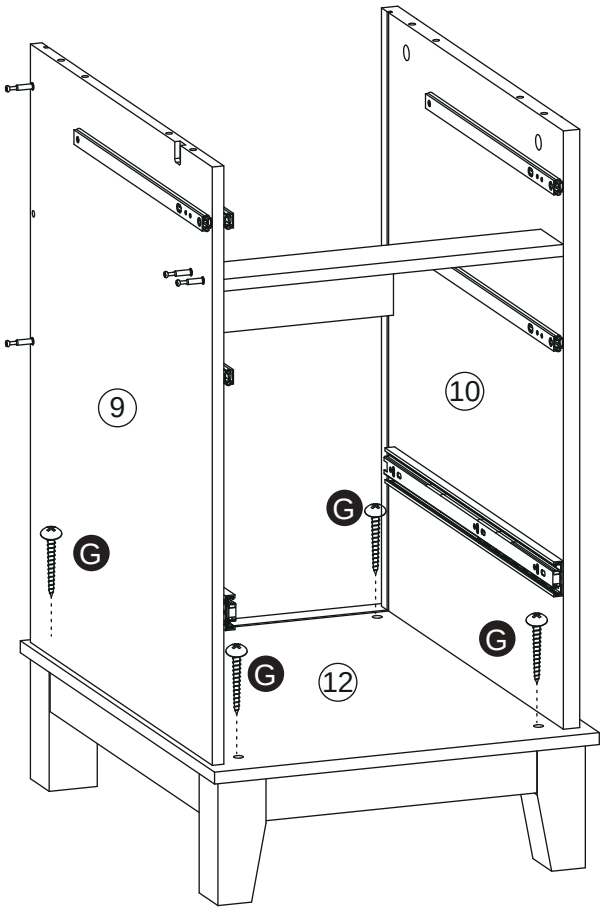

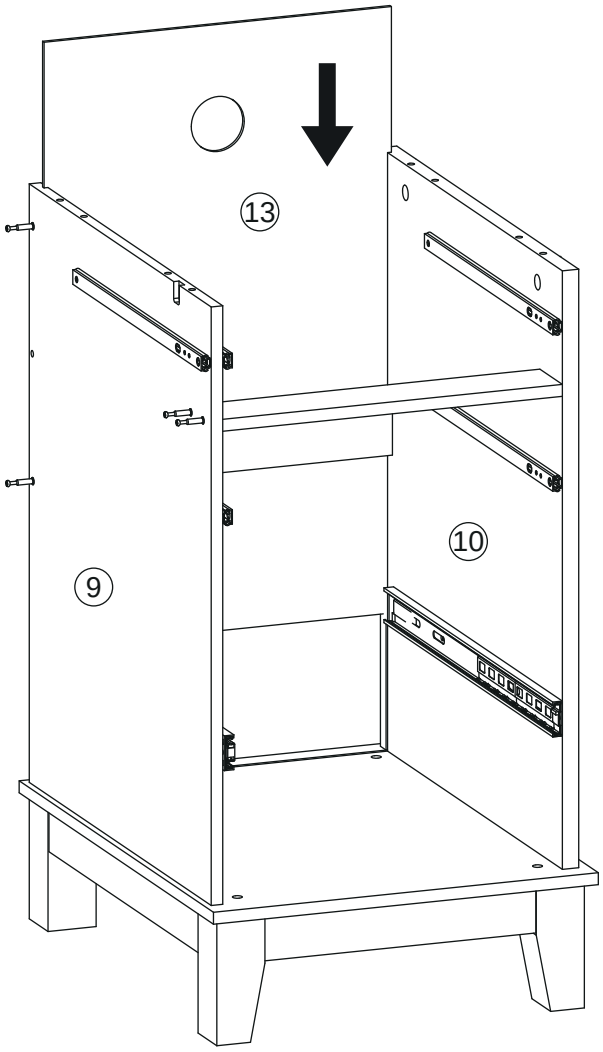

Step 15

A ×10	B ×6	C ×4	O ×2
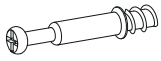			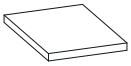

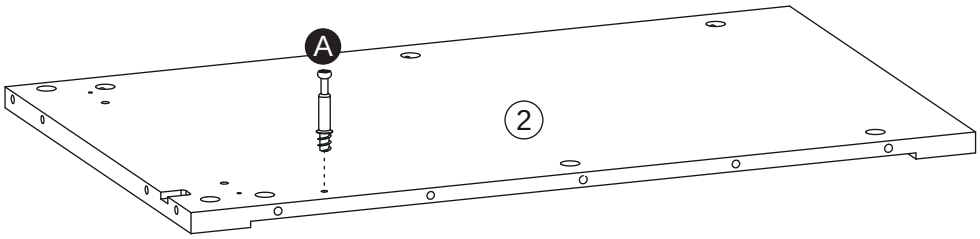

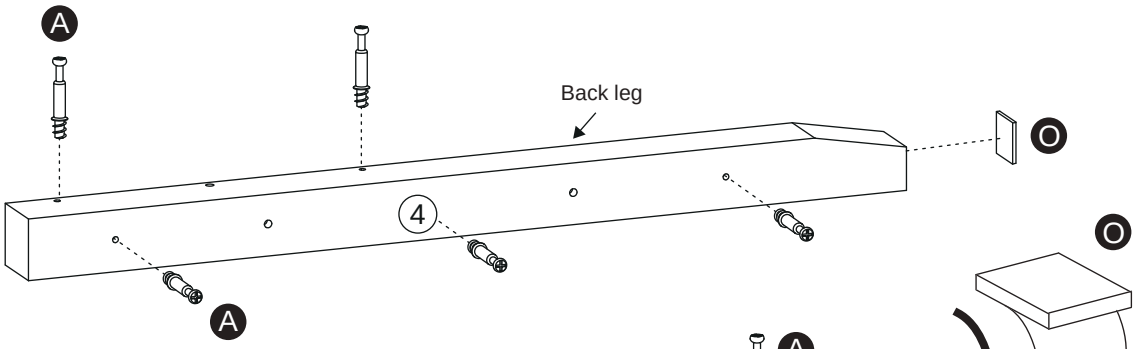

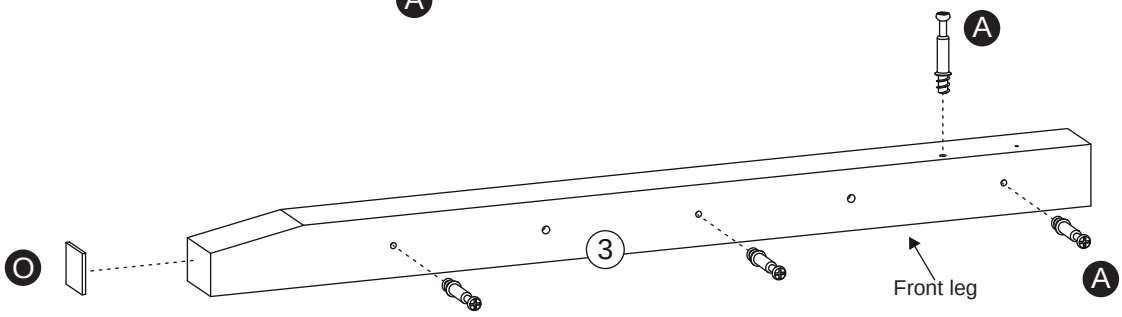

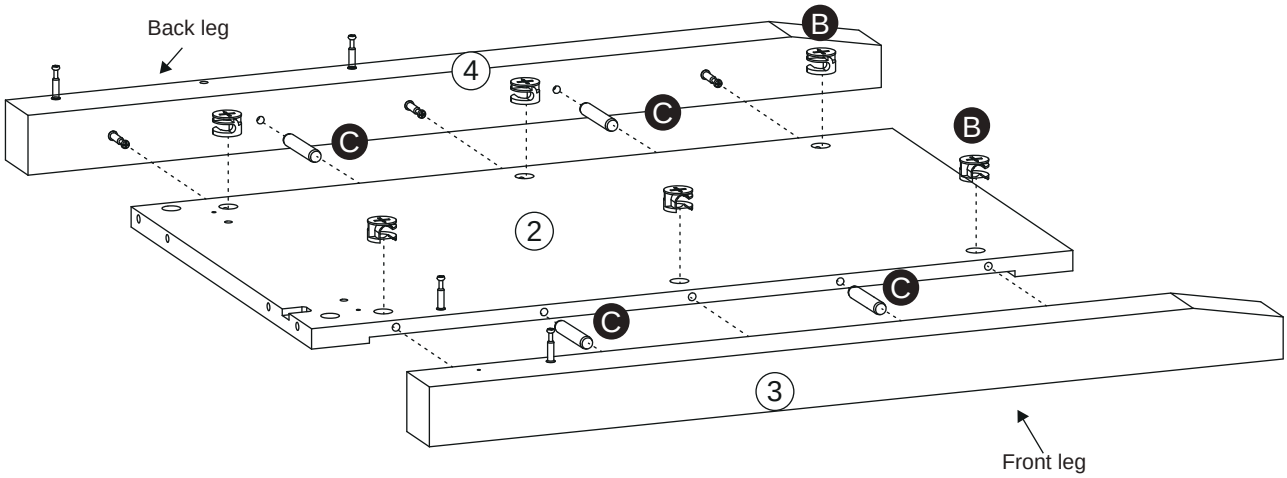

Step 16

D ×3	Q ×1	U ×2	V ×2
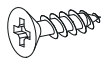			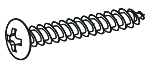

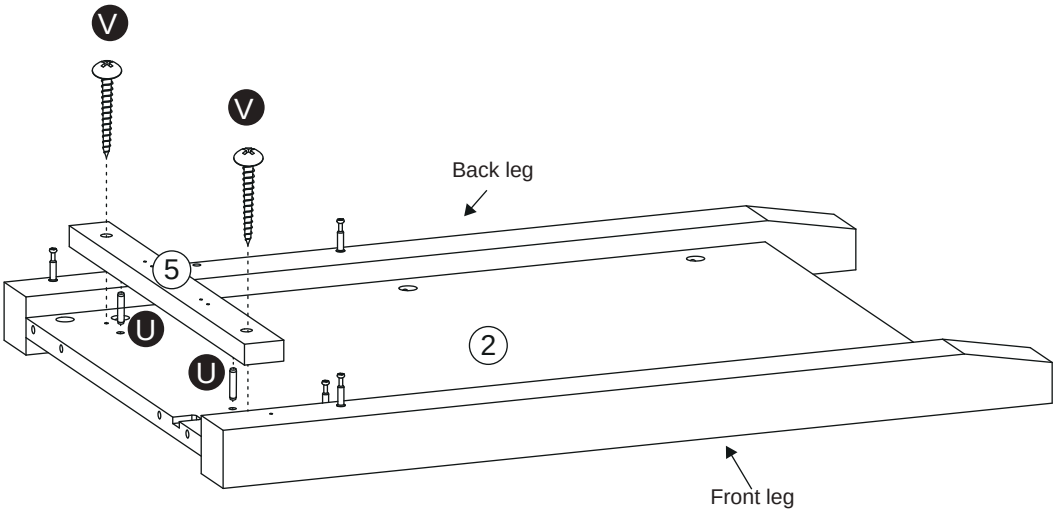

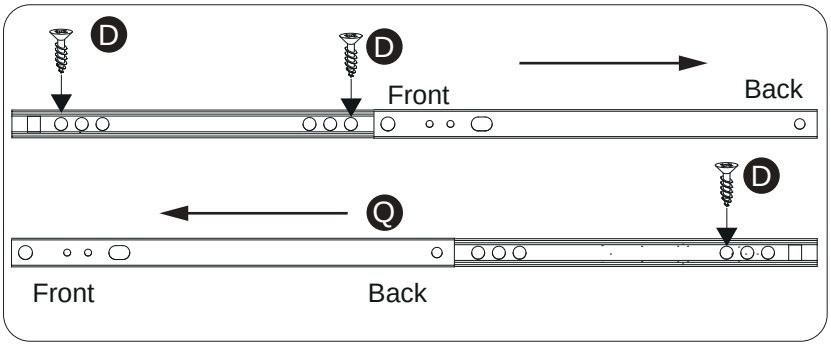

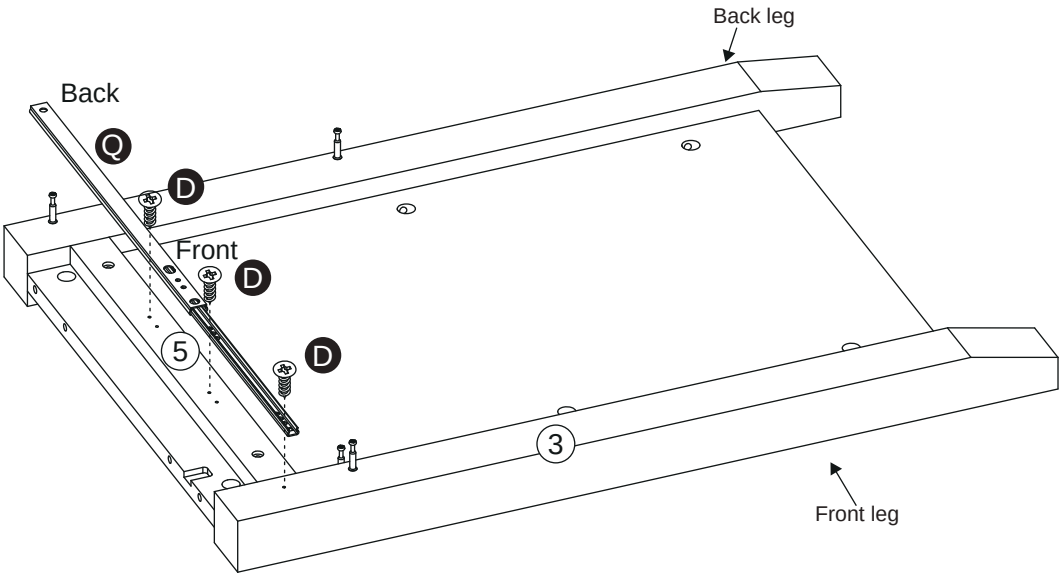

Step 17

B ×8	C ×2

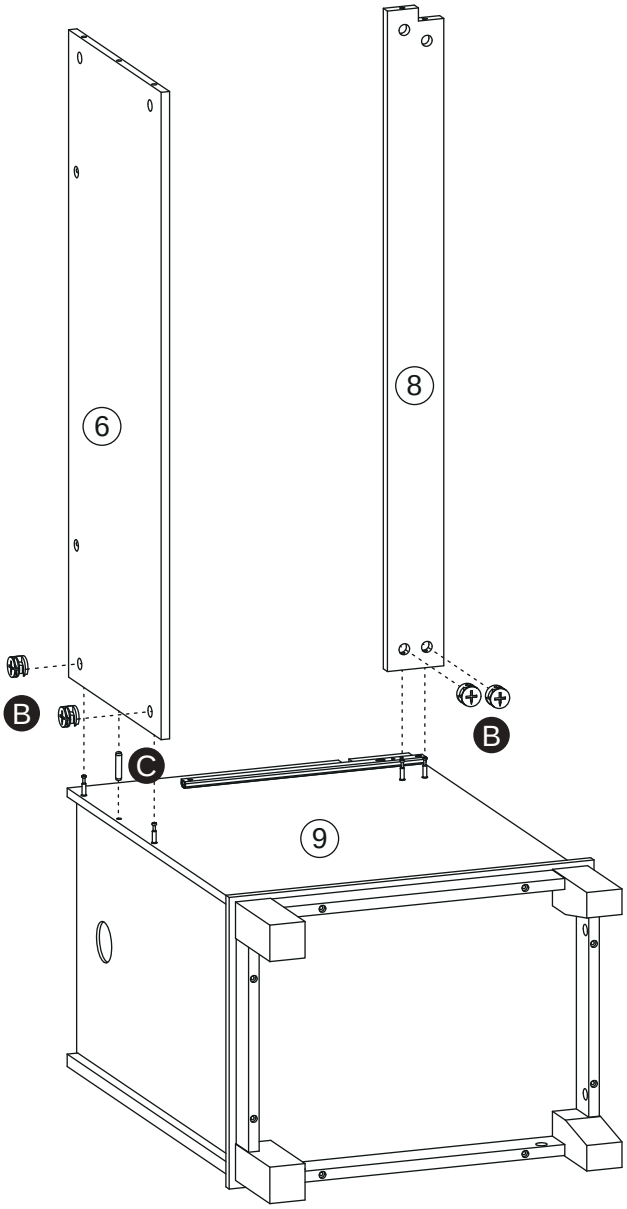

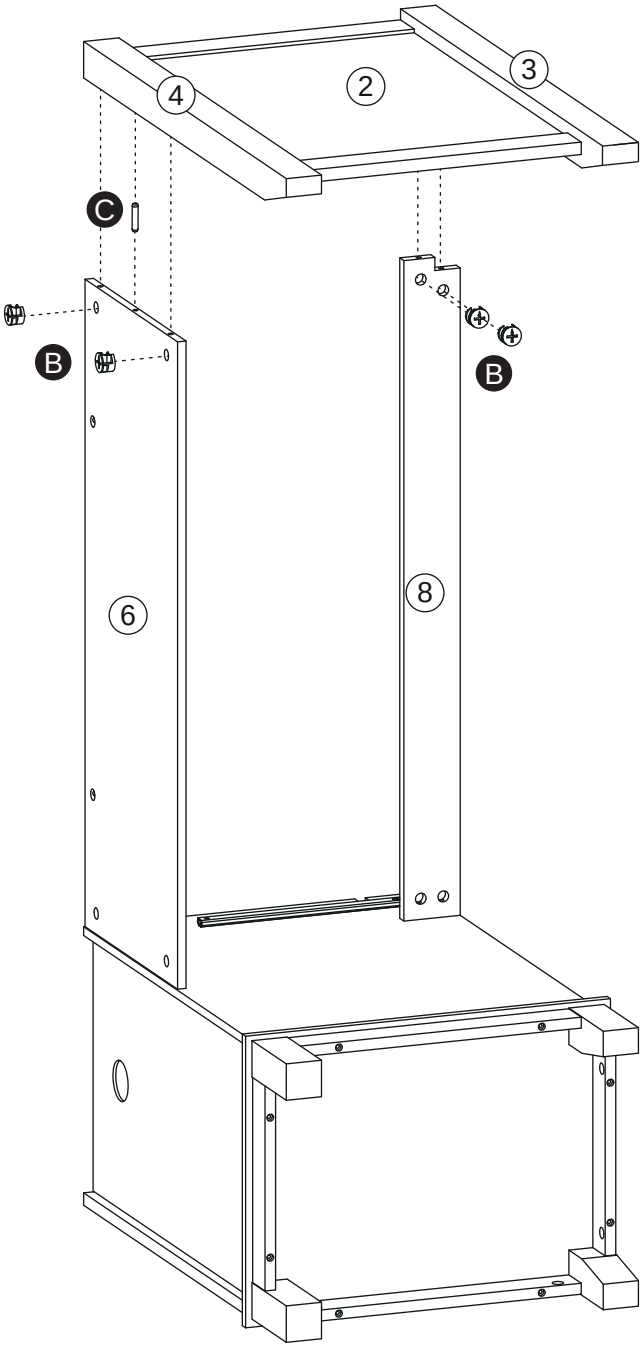

Step 18

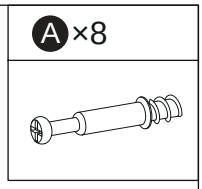

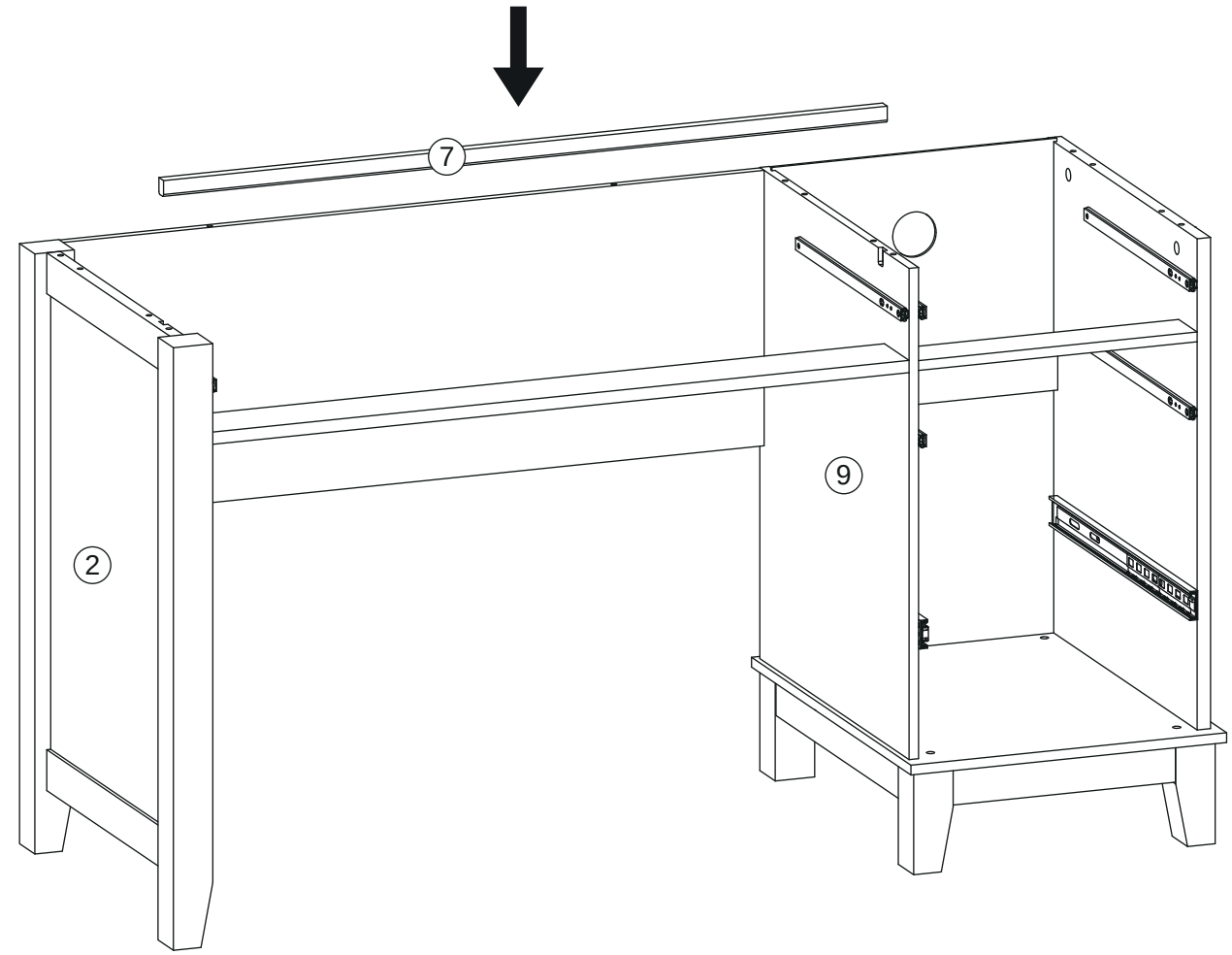

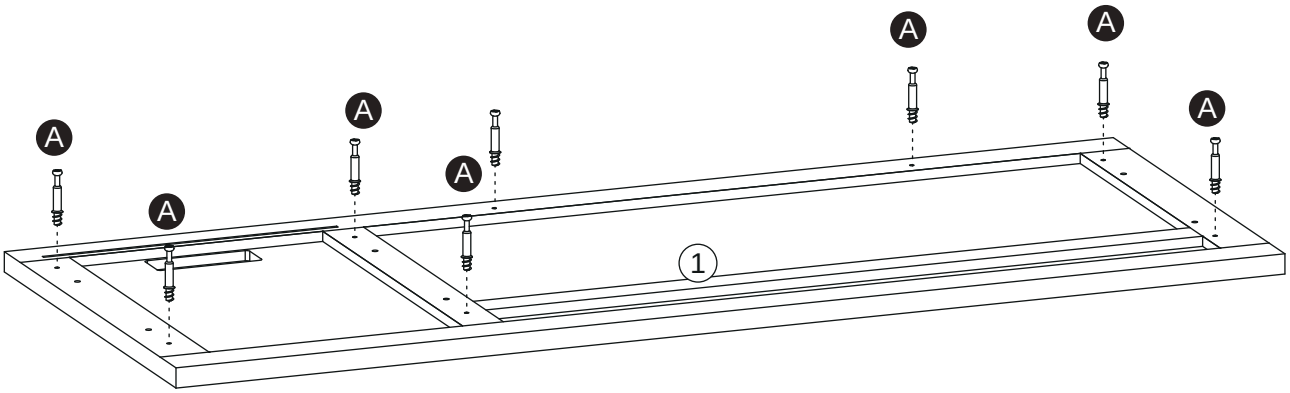

Step 19

B ×8	C ×6	S ×1	W ×2
		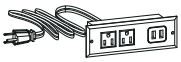	

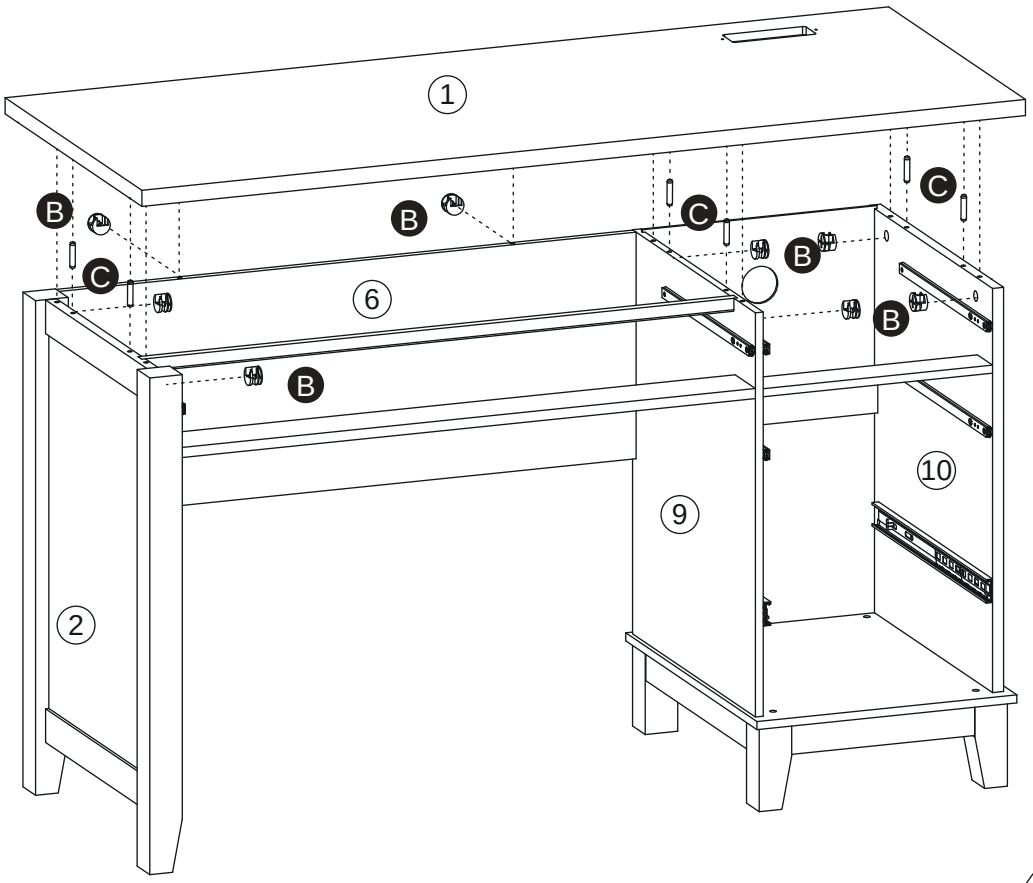

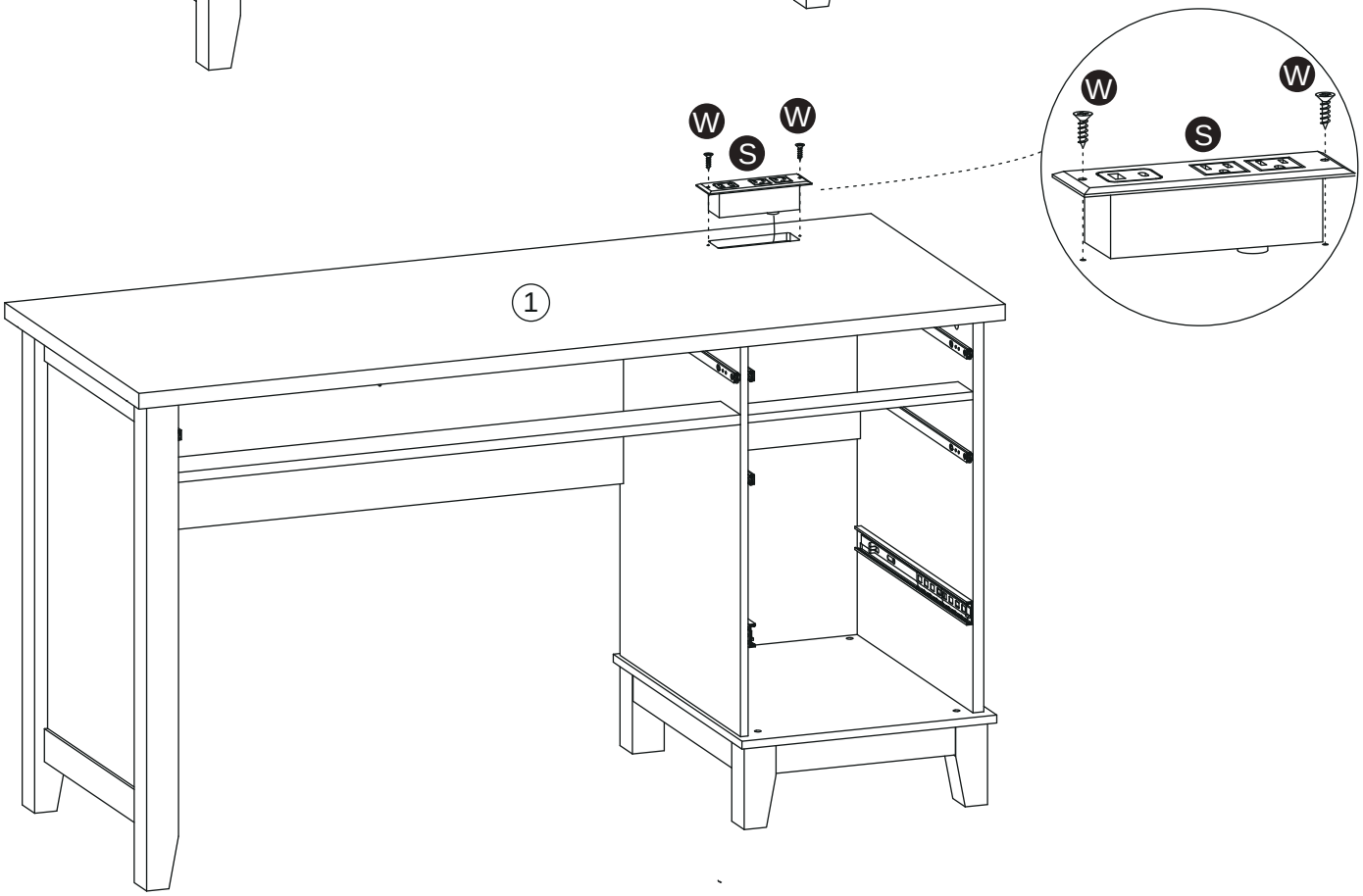

Step 20

E ×4	N ×4	T ×10
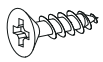		

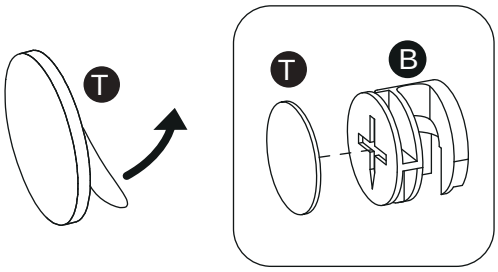

Use the paper sticker (W) to cover the screw and cam holes if needed

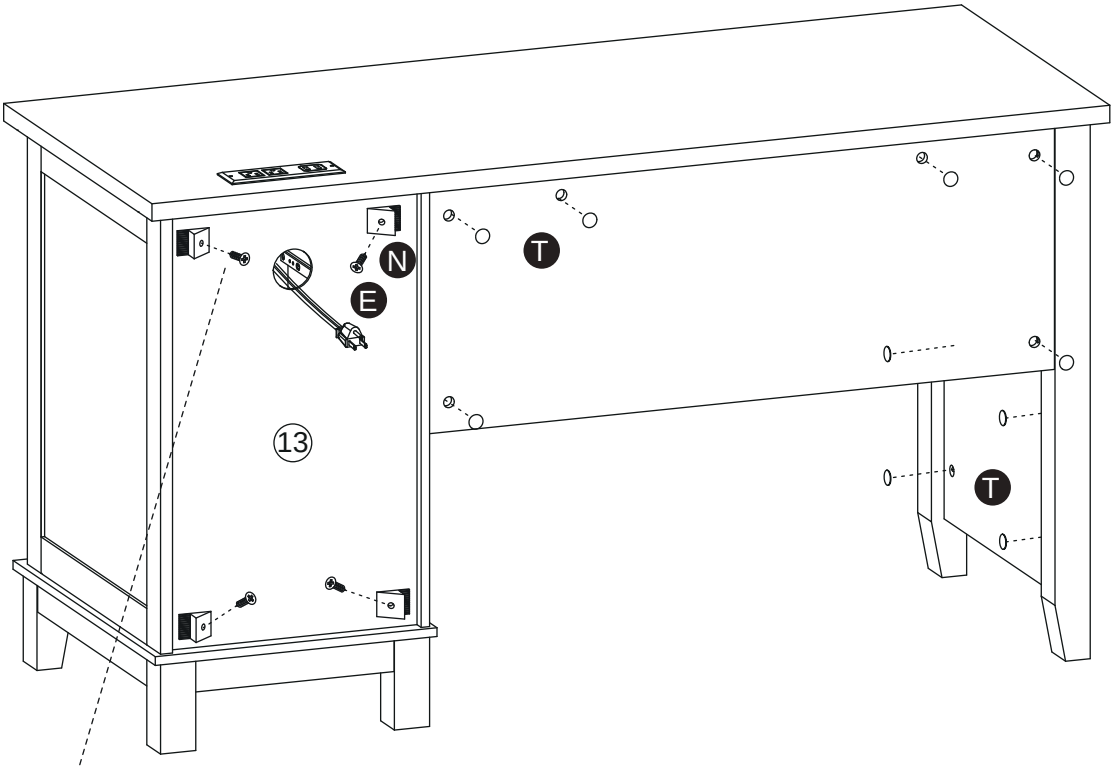

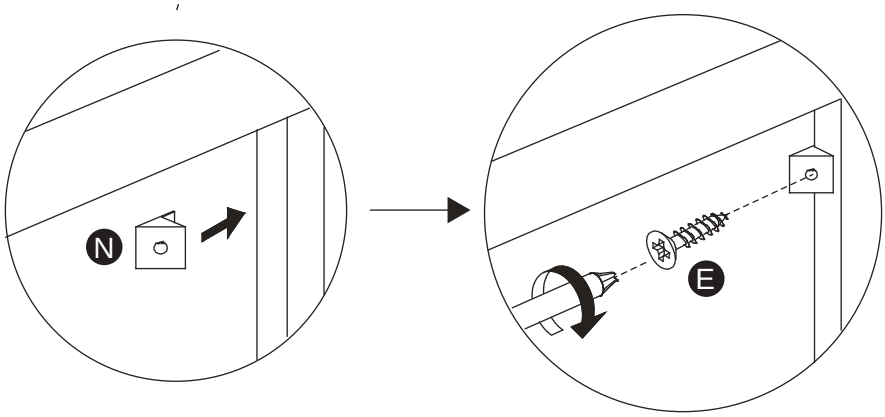

Step 21

J ×6

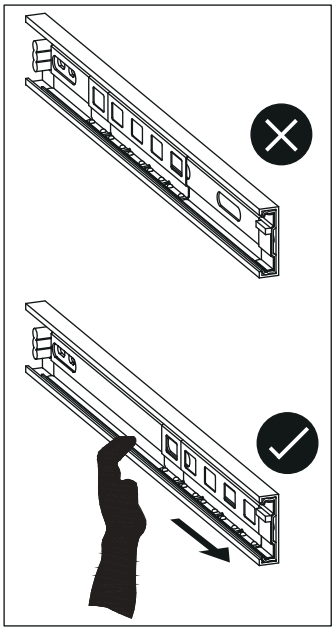

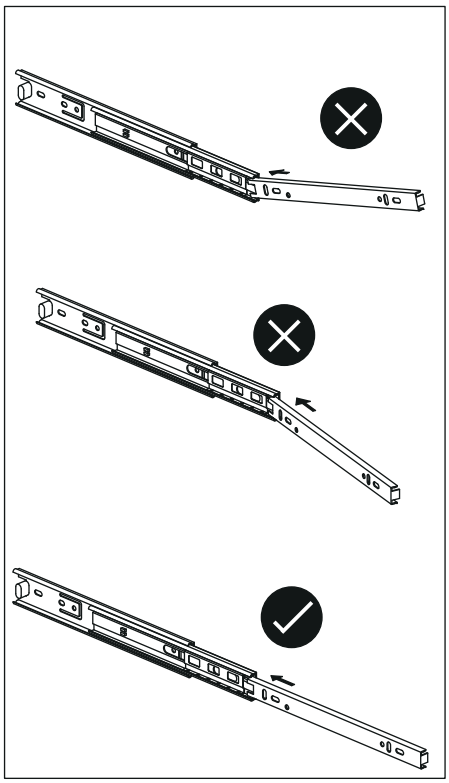

1.Drawers must be horrizontally put into the cabinets.

2.Make sure both sides sliders match well to avoid damage.

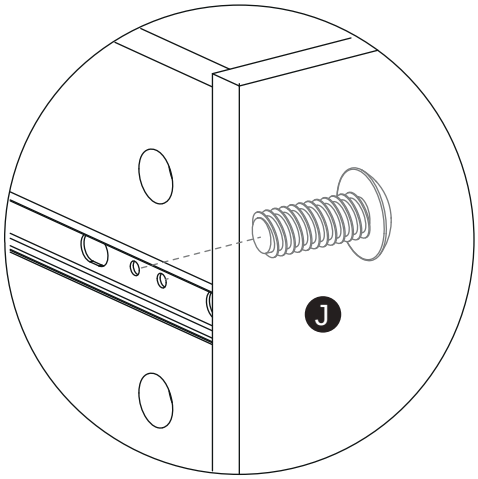

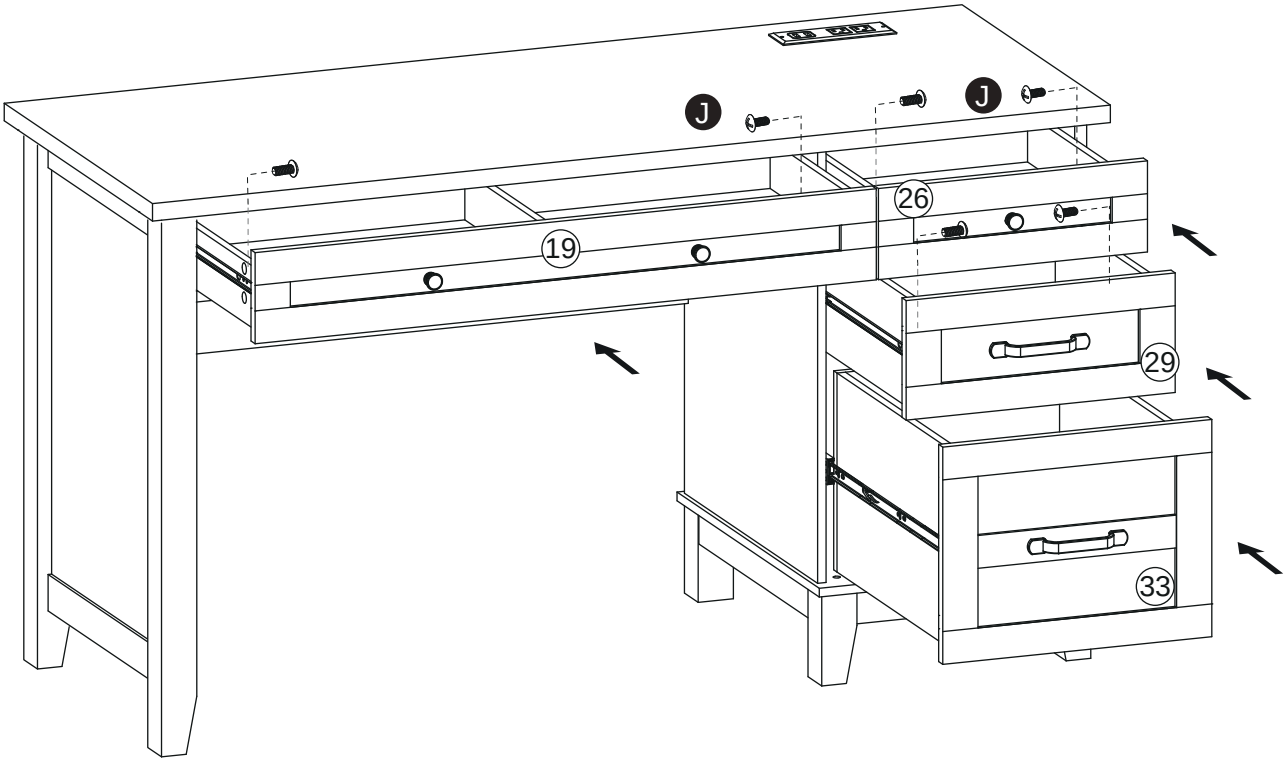

GARVEE

support@garvee.com