DeerValley®

DV-1SD0246B08	60" x 76"	Shower Door
PRODUCT MODEL	DIMENSIONS	PRODUCT CATEGORY



FEATURES

- Safe, shatterproof 5/16" tempered glass
- Waterproof, leak-proof design
- Durable stainless steel hardware
- Framed design with towel-hanging handles
- Two doors slide past each other
- Dry and wet separation
- Smooth, anti-jump rollers system
- Three modern colors available

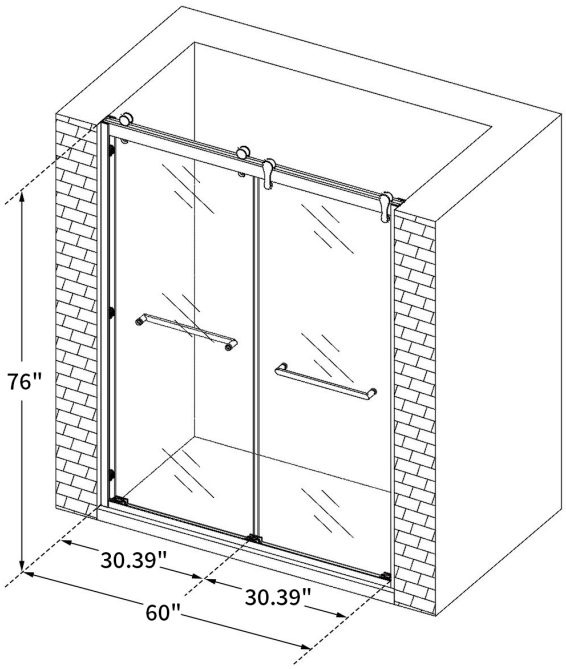

SPECIFICATIONS

- Glass Material: Tempered Glass
- Hardware: 304 Stainless Steel
- Product Size: 60"W x 76"H
- Weight: 173.08 lbs
- Door Installation Type: Double Sliding
- Glass Thickness: 5/16"
- Glass Certification: ANSI/SGCC
- Frame Type: Framed
- Glass Finish: Clear
- Color: Matte Black

INSTALLATION

- On the floor or shower base

COLOR

Matte Black

ACCESSORIES LIST

- Upper guide rail ×1
- Hanging wheels ×4
- Movable doors ×2
- Left frame ×1
- Wall plugs ×6
- Anti-collision parts ×6
- Screws A ×6
- Lower guide rail ×1
- Guide blocks ×3
- Screws B ×6
- Right frame ×1
- Handles ×2

service@deervalleybath.com
(312) 626-9466

5-Year Limited Warranty