Assembly Instructions

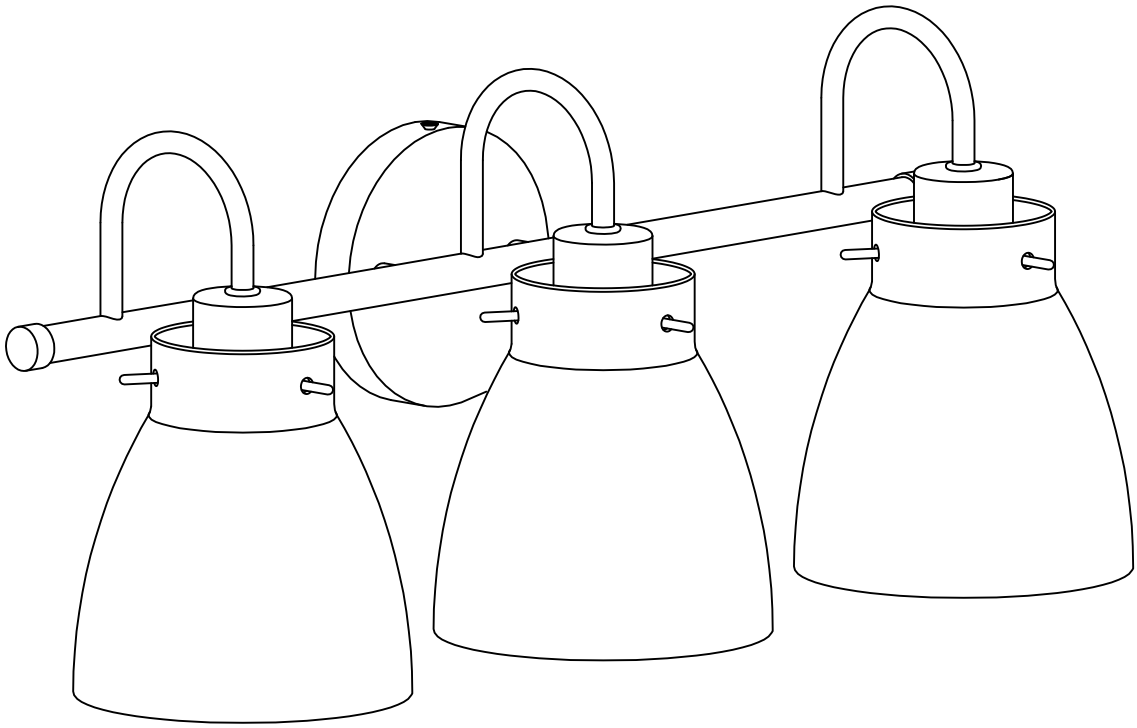

3-Light Vanity Light | Model No. **THCL-LE0038**

Contact Us

We're here to help you.

Your satisfaction is our top priority. If you encounter any issues with this product, such as missing or damaged parts, we're here to help. Please retain the original packaging and take photos of the packaging and the product, then contact us as soon as possible.

Specifications

1. Input Voltage: 120VAC 60Hz
2. Max.load Power: Incandescent Bulb 60W
3. Socket Type: Standard Medium E26

Warm Tips

1. Please pay attention to the warning signs.
2. Carefully read these instructions and keep them for future reference.
3. Check the parts list and confirm everything's there before starting assembly.
4. When assembling, put all parts on a soft, smooth surface like a carpet to avoid scratches.
5. This summary may not include every detail of all variations and considered steps. Please feel free to contact us if further information and help are needed.

⚠ WARNING

1. All electrical connections must be in accordance with local codes, ordinances.
2. Inspect the wire insulation for any cuts, abrasions, or exposed copper that may have resulted during shipping. If there is a defect in the wire, do not attempt installation.
3. These fixtures should be mounted on an electrical outlet box. The box must be directly supported by the building structure.
4. Please consult a qualified electrician if you have any electrical questions.
5. DO NOT try to repair or disassemble the unit. Doing so could damage the unit and cause possible electrical shock. Seller assumes no responsibility or liability for any damage caused by incorrect assembly, improper operation or improper use.
6. Keep packing materials away from children to prevent choking and suffocation.

TOOLS REQUIRED (NOT INCLUDED)

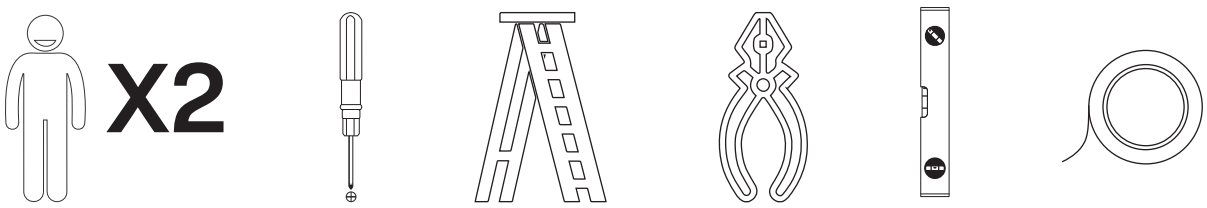

CARING FOR YOUR ITEM

1. Clean the fixture with a soft, dry cloth.
2. Do not use any cleaners with chemicals, solvents or harsh abrasives.

Caution

Before attempting to clean the fixture, disconnect the power to the fixture by turning the breaker off or removing the fuse from the fuse box.

PRODUCT TROUBLESHOOTING

PROBLEM	POSSIBLE CAUSES	SOLUTION
Bulb won't light.	1. Bulb is burned out. 2. Power is off. 3. Faulty wire connection. 4. Faulty switch.	1. Replace light bulb. 2. Make sure power supply is on. 3. Check wiring. 4. Test or replace switch.
Fuse blows or circuit breaker trips when light is turned on.	Crossed wires or power wire is grounding out.	Check wire connections.

WARNING: RISK OF ELECTRIC SHOCK

Before starting installation of this fixture or removal of a previous fixture, disconnect the power by turning off the circuit breaker or by removing the fuse at the fuse box. Turning the power off at the switch is not sufficient to prevent electrical shock.

FIG.1. Place the wall switch to the "OFF" position.Depending on which type of fuse box you have in your home.

FIG.2. Place either the main (Master) switch to the"OFF"position, cutting off power to your entire home or turn off the individual switch that provides power to where the fixture will be installed.

OR

FIG.3. Place either the main (Master) switch to the "OFF" position, cutting off power to your entire home OR unscrew the fuse that provides power to where the fixture will be installed.

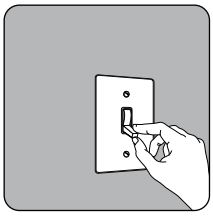

FIG.1 WALL SWITCH

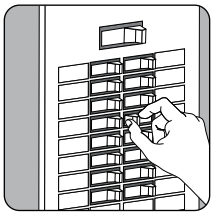

FIG.2 BREAKER PANEL

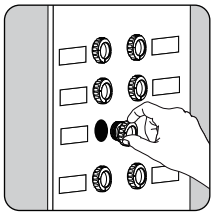

FIG.3 FUSE BOX

Parts List

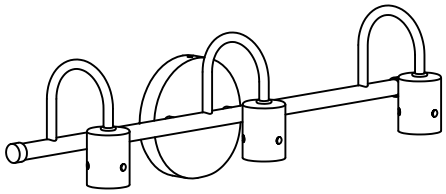 ❶ 1pc	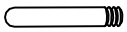 ❷ 10pcs	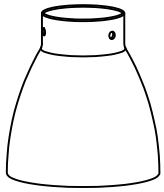 ❸ 3pcs

Harcware List

Ⓐ 1pc	Ⓑ 1pc	Ⓒ 2 pcs	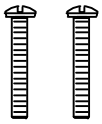 Ⓓ 2 pcs	Ⓔ 3 pcs

⚠ Caution

Please check if the parts are intact before starting the assembly.

1

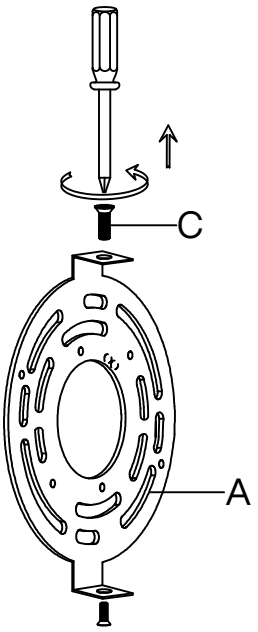

2

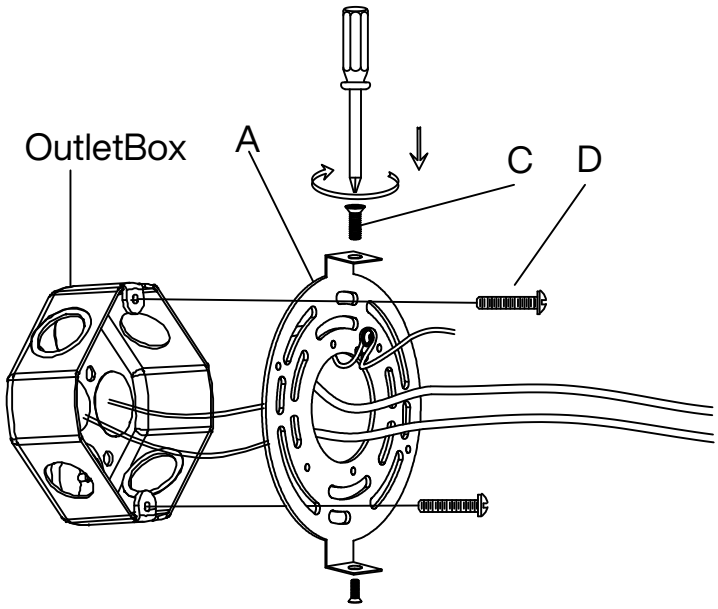

3

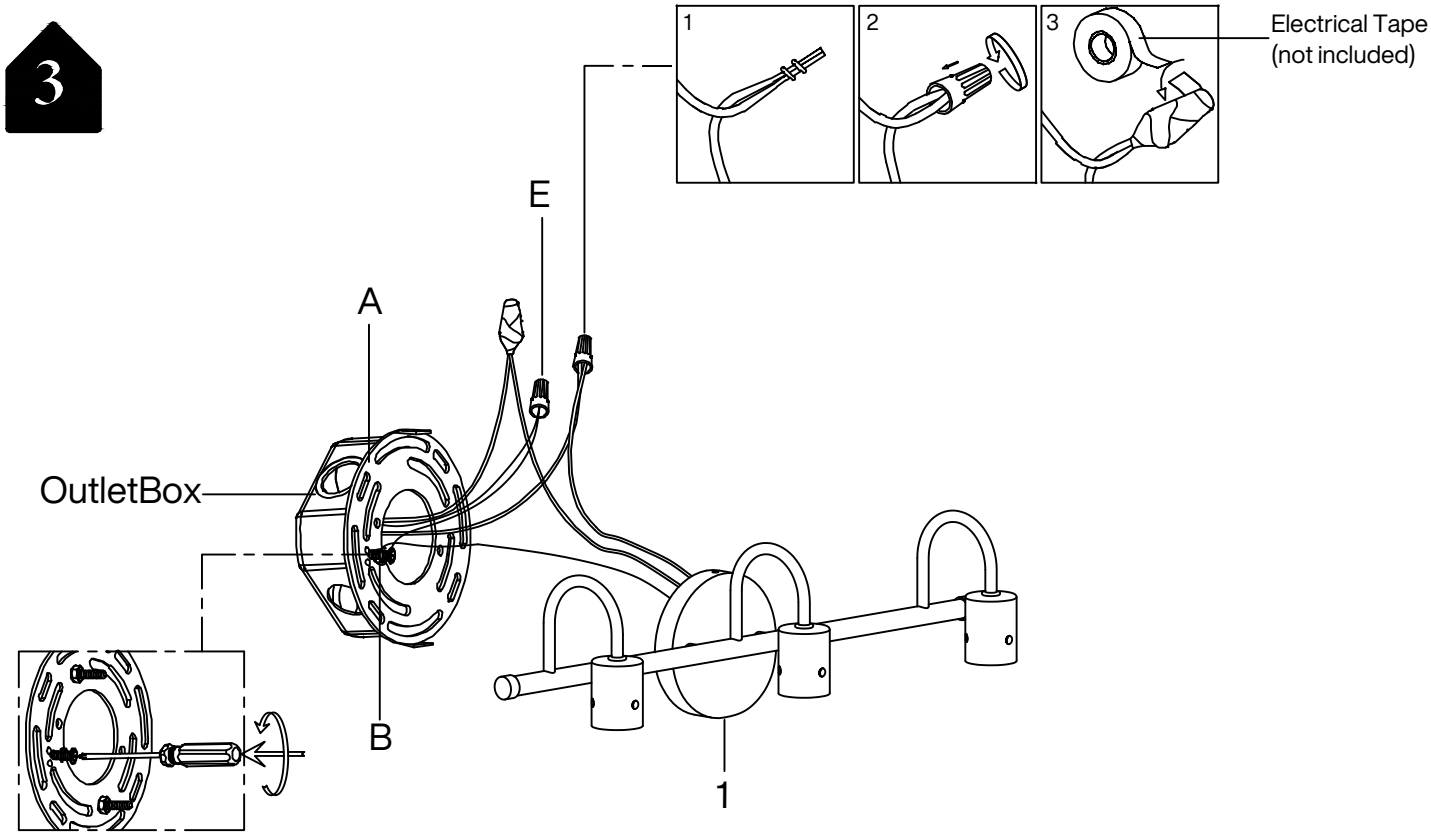

Caution

Connect wires,black to black(hot),white to white(neutral) and copper wire to ground wire.
Once complete,tuck the excess wire into the outlet box.

4

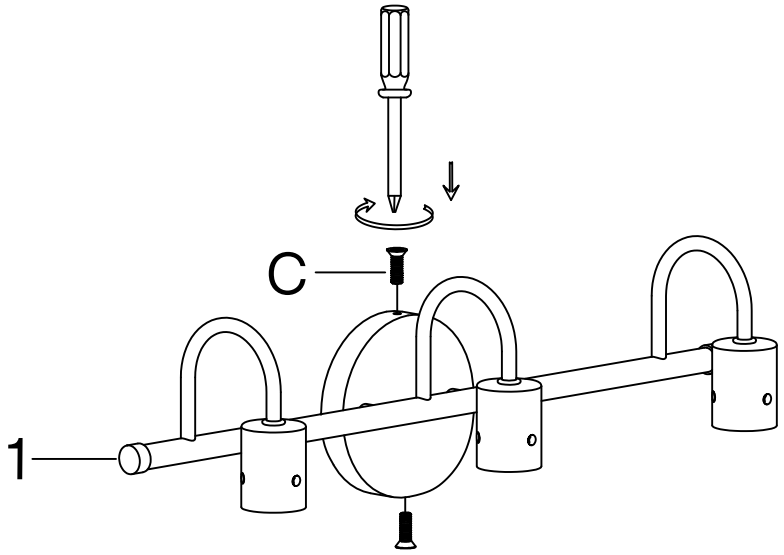

5

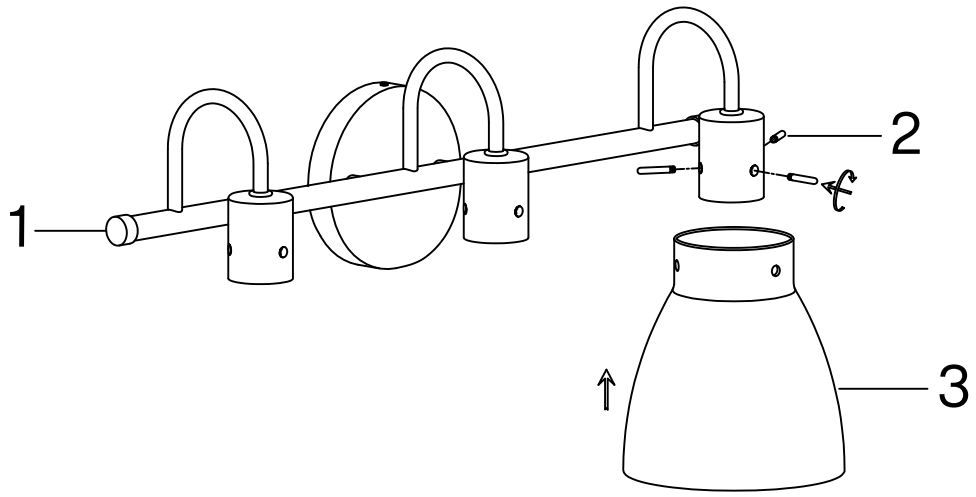

6

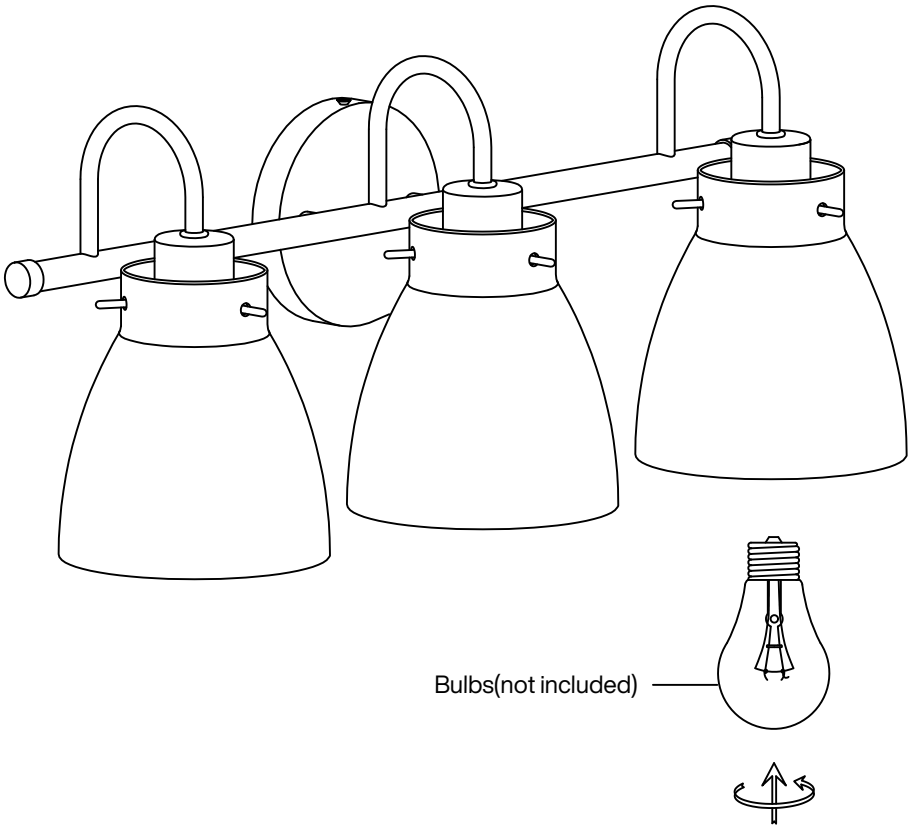

Caution

Use 60-watt max.standard-base incandescent bulbs or CFL/LED equivalents(bulbs not included).
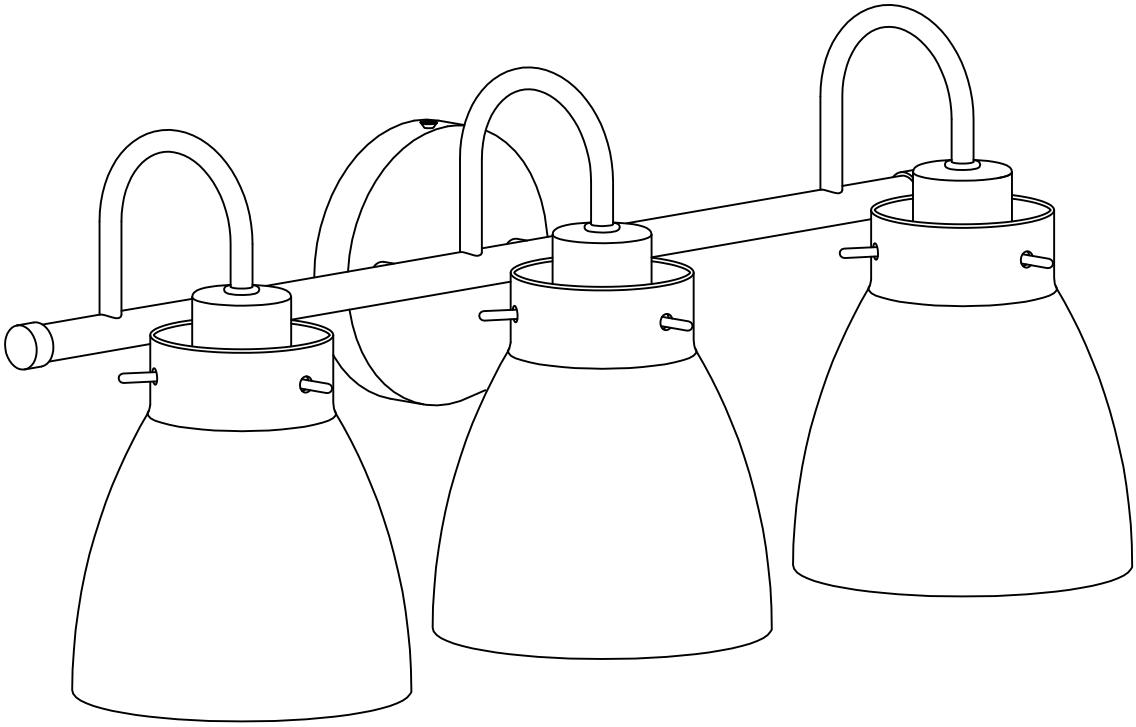
Thank you for your support!