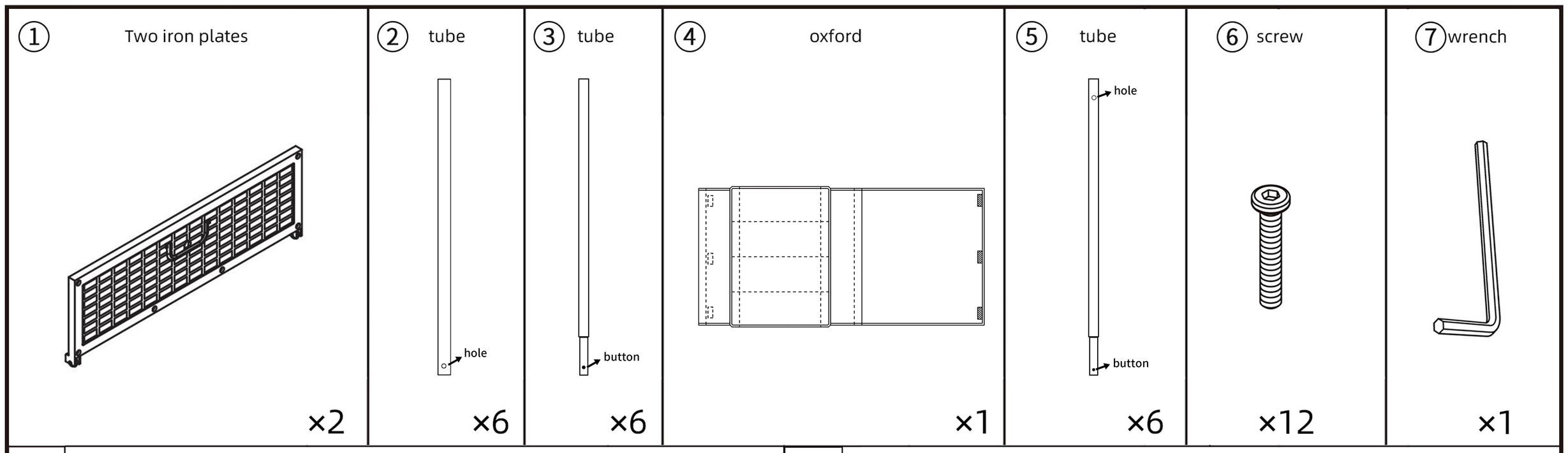

1

Step 1: Linking the tubes

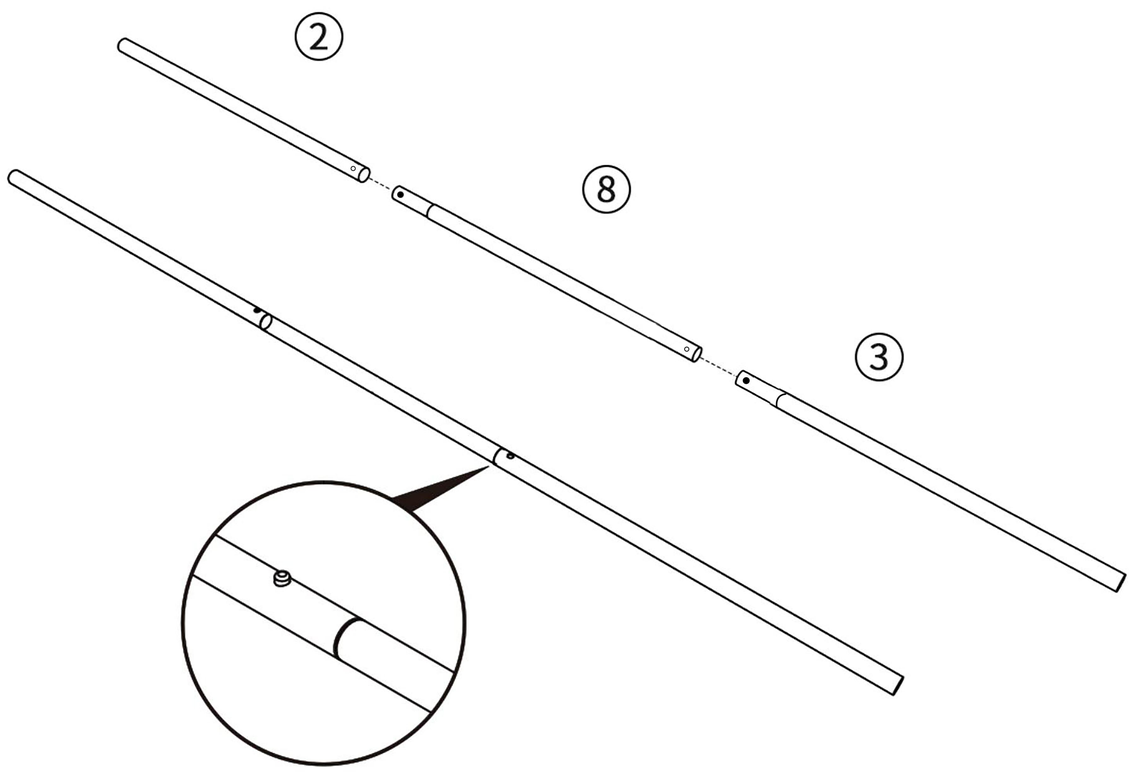

2

step 2：install the middle two tubes

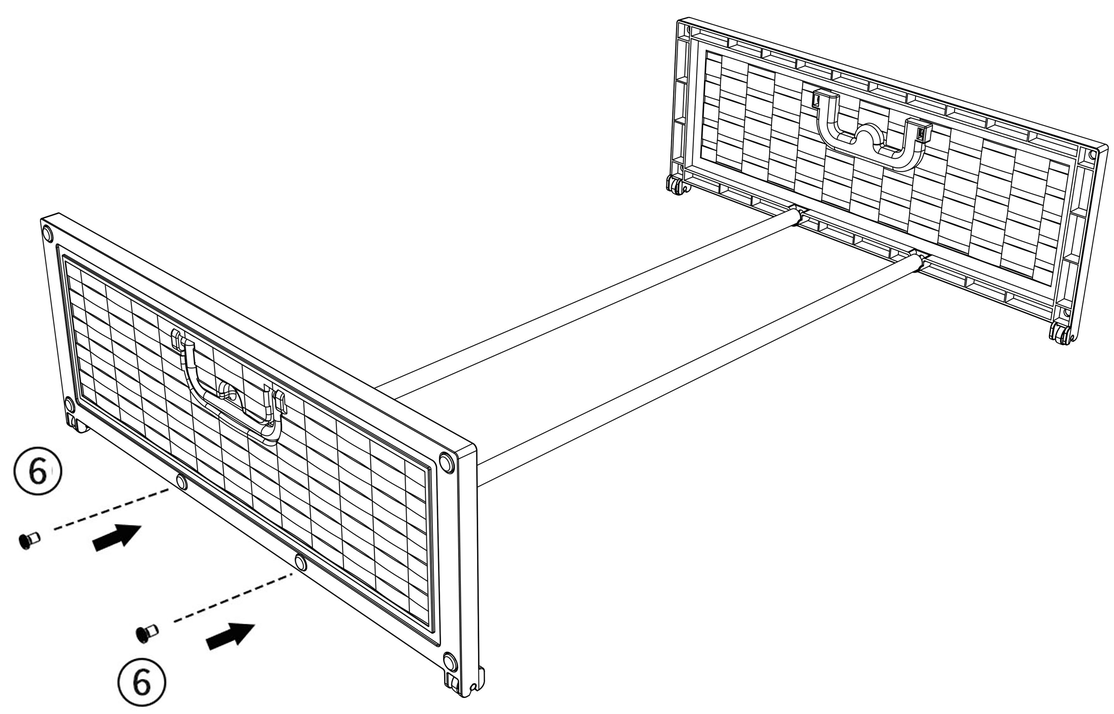

3

Step 3: Place the cloth cover on the iron tube

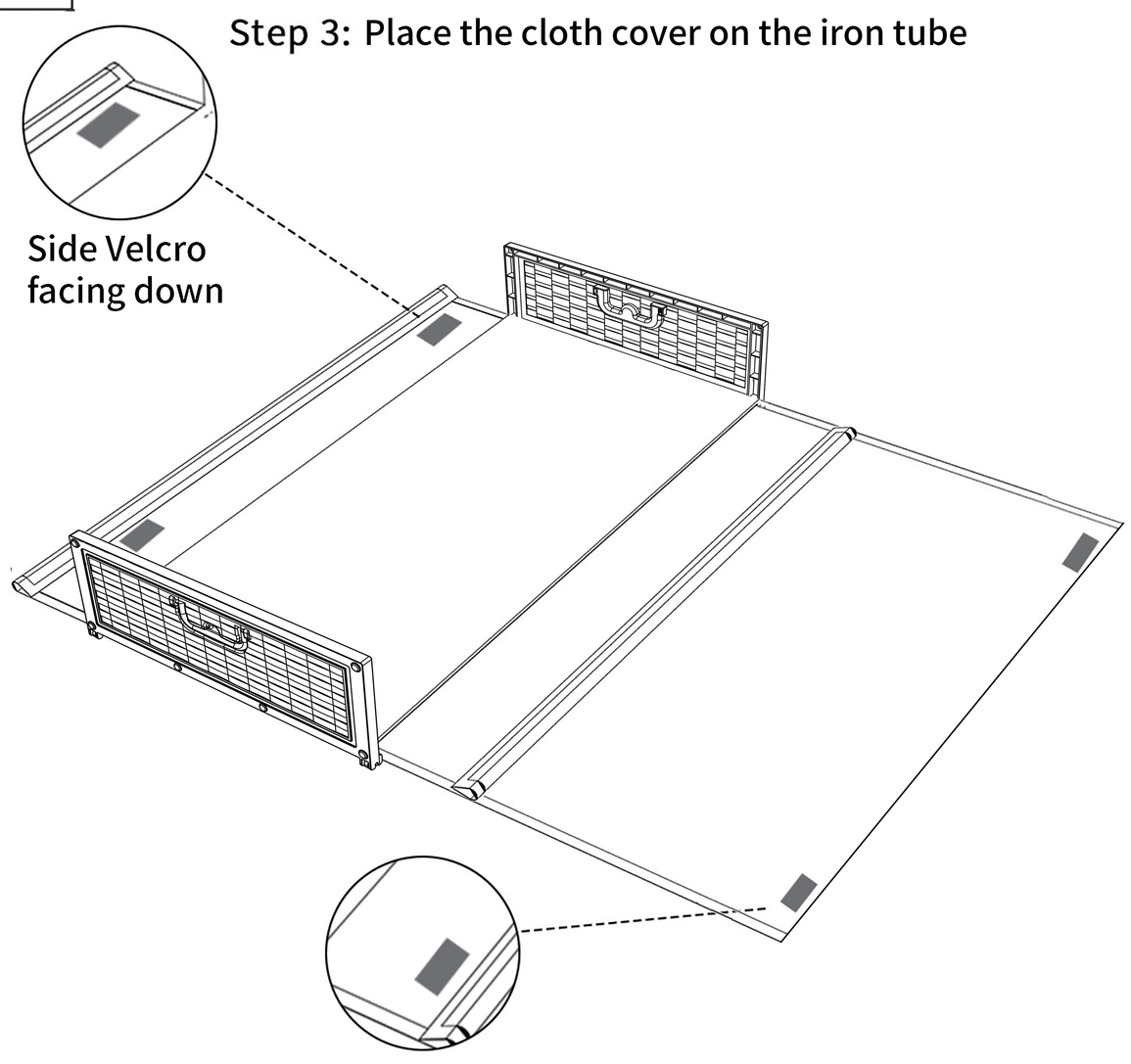

4

Step 4: The left and right tubes are placed above the cloth cover

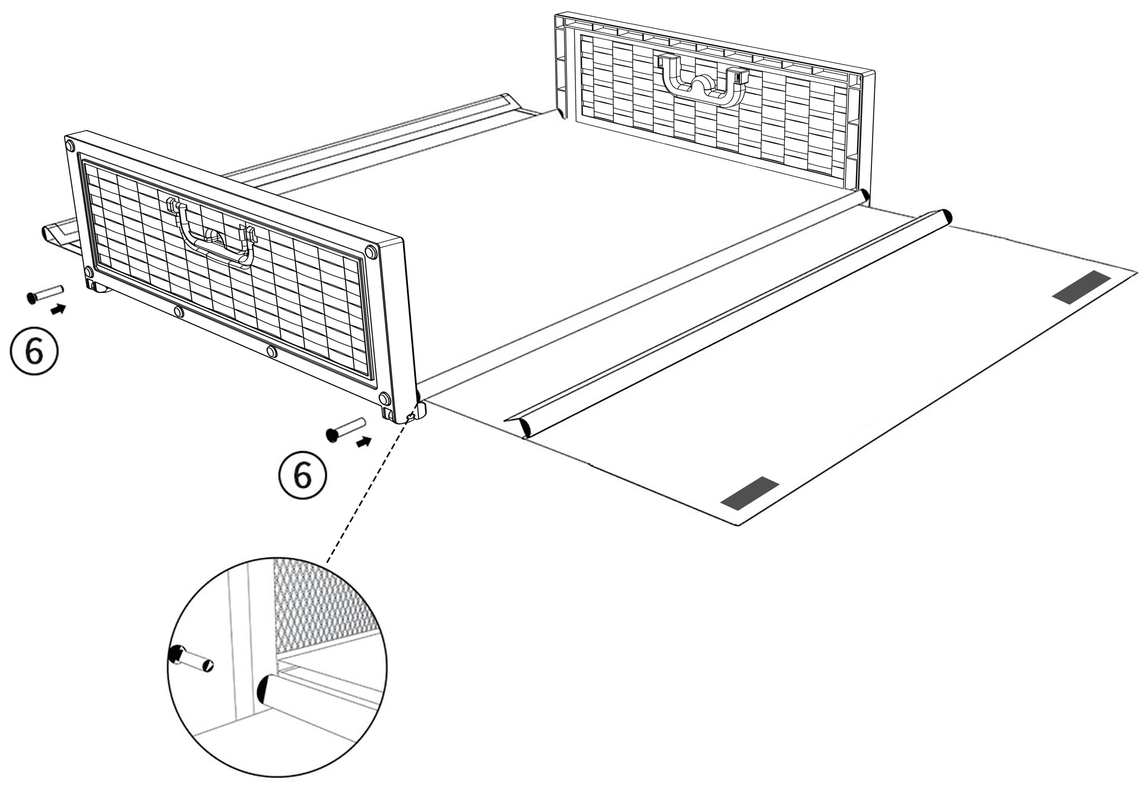

5

Step 5: Thread the pipe into the Oxford cloth cover

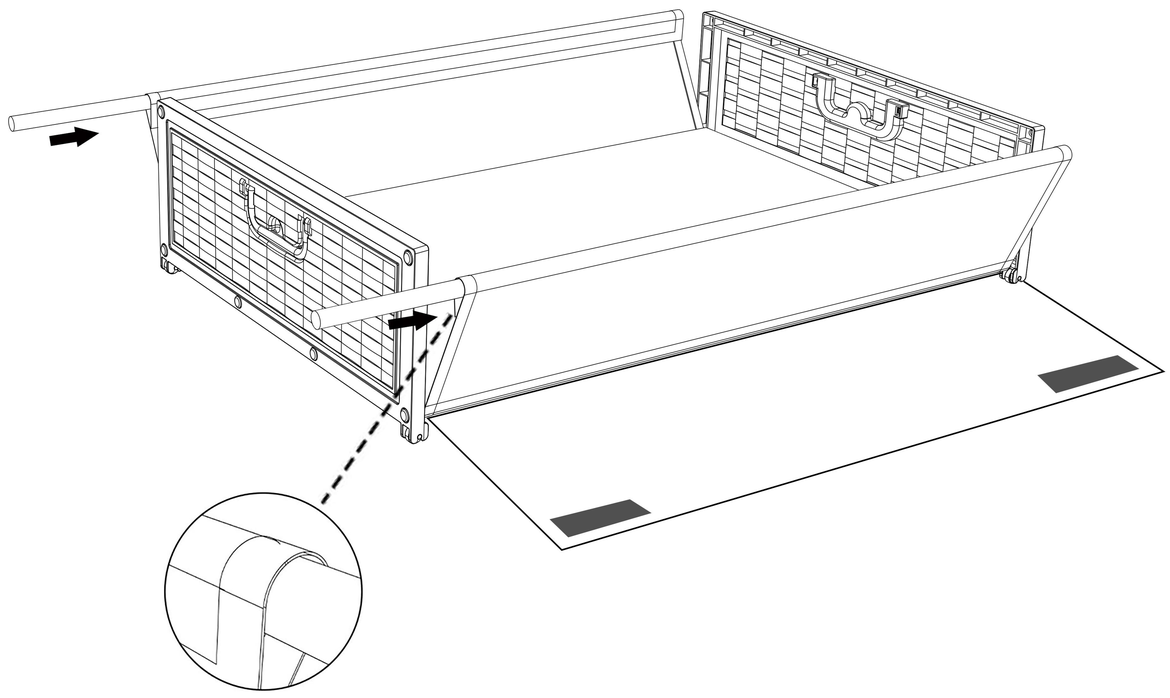

6

Step 6：Tighten the screws on the left and right sides of the top.

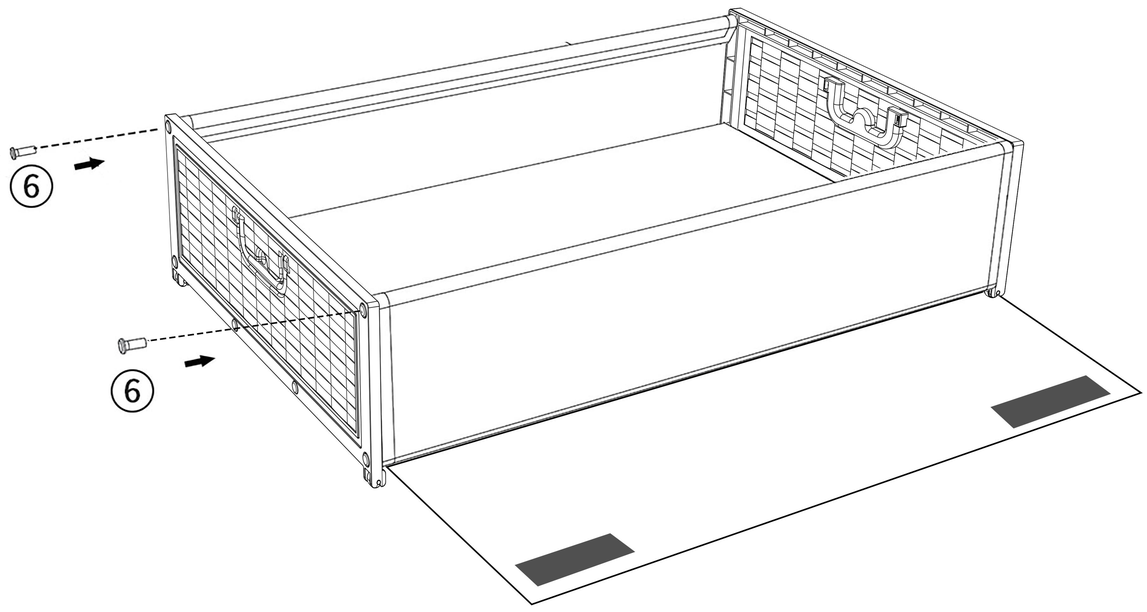

7

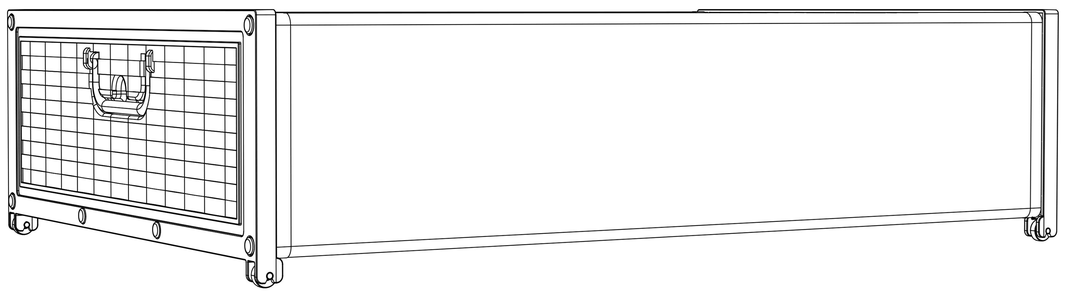

Attention points

Warm tip: Because the tube is hand-baked paint, the thickness of the paint will be slightly deviated, so in the installation of the tube, if you encounter individual tubes are a little tight and not good to insert, please try a little force or change a section of the tube.Thank you for your purchase and have a nice life!