FOLDING CARPORT

Retractable Outdoor Canopy - Instruction Manual

SAFETY | SITE PREPARATION | ASSEMBLY

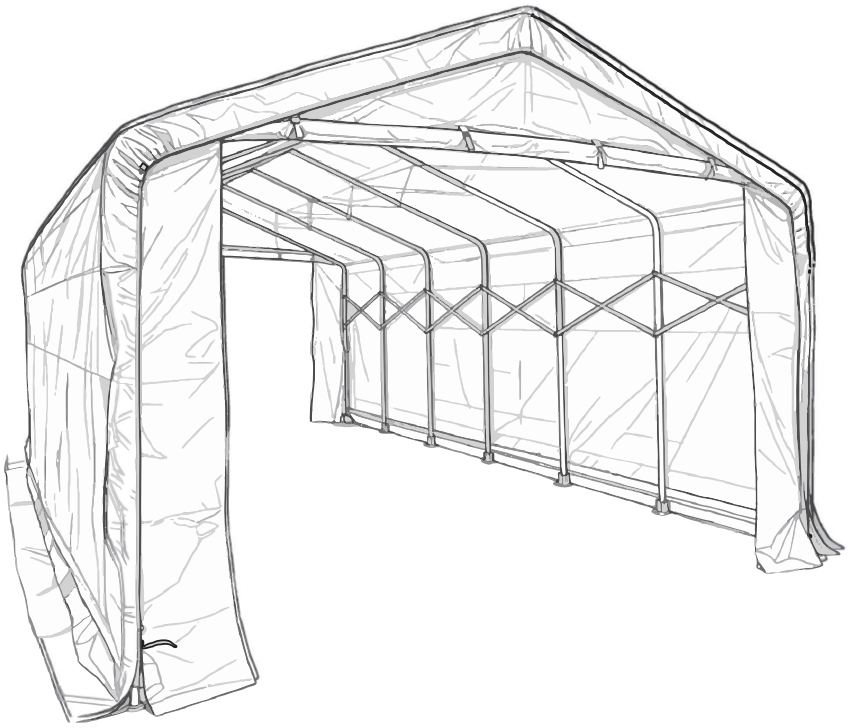

Before Assembly

- Read all instructions before assembly and keep this manual for future reference.
- Verify every part against the parts list before starting. Do not assemble if parts are missing or damaged.
- Assembly should be completed by multiple capable adults. Wear gloves and keep hands clear of moving scissor joints.
- Install only on a flat, solid surface and anchor the frame before use.

SAFETY NOTICE This canopy is a temporary outdoor shelter, not a permanent structure. Do not use during high wind, heavy rain, snow, lightning, or severe weather. Keep away from open flames, grills, heaters, and other heat sources.

START HERE

Before you build

Complete these checks before opening hardware bags.

01 **Prepare the site** Install only on a flat, level, firm, and stable surface. Recommended: solid concrete or dry, firmly compacted soil/sandy soil. Do not use loose sand, mud, standing-water areas, steep slopes, or unstable fill.

02 **Mark the full footprint** Use the dimensions for your model to mark the overall length, width, corners, leg/post positions, and anchor points. Measure both diagonals; they should be approximately equal.

03 **Check every part** Compare all tubes, connectors, hardware, fabric panels, ropes, stakes, and anchors with the Parts/Packing List. Stop if an important part is missing, bent, torn, cracked, or damaged.

04 **Choose calm, dry weather** Do not assemble in strong wind, gusts, rainstorms, thunderstorms, or snowstorms. Large fabric panels can catch wind like a sail and become difficult to control.

05 **Use the correct anchors** Match the anchoring system to the surface and install every required anchor point. **Never rely on the frame weight alone, and never leave a partially assembled or unsecured carport unattended.**

IMPORTANT Do not use the carport until the frame is fully assembled, all fasteners are secure, the cover is correctly installed, and all required anchors are completely installed and tightened.

SAFETY

Safe assembly and use | Keep this page accessible during installation

ASSEMBLY

- Assembly should be completed by multiple capable adults. Do not attempt to erect large frame sections alone.
- Wear work gloves, closed-toe shoes, and appropriate clothing. Use safety glasses when drilling or installing concrete anchors.
- Do not stand beneath an unsupported frame, climb on partially assembled components, or allow children to assist with structural assembly.
- Keep children and pets away from the work area until the carport is fully assembled and securely anchored.

SITE & WEATHER

- Provide enough clearance for assembly, anchoring, inspection, and maintenance. Keep away from overhead power lines, low branches, sharp objects, unstable walls, and poorly drained areas.
- Do not obstruct doors, driveways, emergency access, or required property clearances.
- If the frame becomes tilted, twisted, misaligned, bent, or unstable, stop and recheck the ground, tube numbers, connector orientation, leg positions, and diagonal measurements.
- Do not use excessive force or aggressive hammering to correct a misaligned frame.

FIRE & HEAT HAZARD

- Keep the carport and fabric cover away from open flames, sparks, grills, portable heaters, welding equipment, hot exhaust systems, and other high-temperature sources.
- Do not smoke or use open flames inside or immediately adjacent to the carport.

NO STRUCTURAL MODIFICATIONS

- Do not drill extra holes, cut tubes, bend connectors, remove structural components, or replace hardware with unsuitable parts unless specifically instructed by the manufacturer.

SEVERE WEATHER

- Unless your specific model is expressly rated for wind or snow loads, do not assume it can withstand severe wind, heavy snow, hurricanes, tornadoes, or other extreme weather.
- Remove excessive snow, water, ice, leaves, or debris when safe.

FINAL CHECK

Ready to assemble?

Confirm every item below before starting structural assembly. Listed in order of priority.

1	**Parts + crew**	All components checked against the Parts/Packing List; no important parts missing or damaged. Multiple capable adults are available for assembly.
2	**Ground + geometry**	Installation surface is flat, level, firm, stable, and adequately drained. Diagonal measurements have been checked.
3	**Weather + utilities**	Weather is calm and dry. Underground utilities have been located before any ground penetration.
4	**Layout + clearance**	Four corners, leg/post positions, and anchor locations are marked. Adequate working clearance is available around the structure.
5	**Dimensions + local rules**	Product length and width are measured and marked on the ground. Local building, zoning, permit, HOA, setback, and temporary-structure requirements have been checked.
6	**Anchoring**	Appropriate anchors are ready for the installation surface.
7	**Instructions**	All assembly instructions have been read and understood.
8	**Tools + PPE**	Required tools and personal protective equipment are ready.

DO NOT USE THE CARPORT UNTIL INSTALLATION IS COMPLETE All fasteners and anchors must be fully installed and tightened before use. The owner is responsible for confirming compliance with applicable local requirements.

Tools Needed (Not Included): Wrench • Screwdriver • Safety Goggles • Drill or Hammer • Step Ladder

SITE PREPARATION AT A GLANCE

Use this visual guide to prepare the installation area, confirm the footprint, and stage tools before assembly.

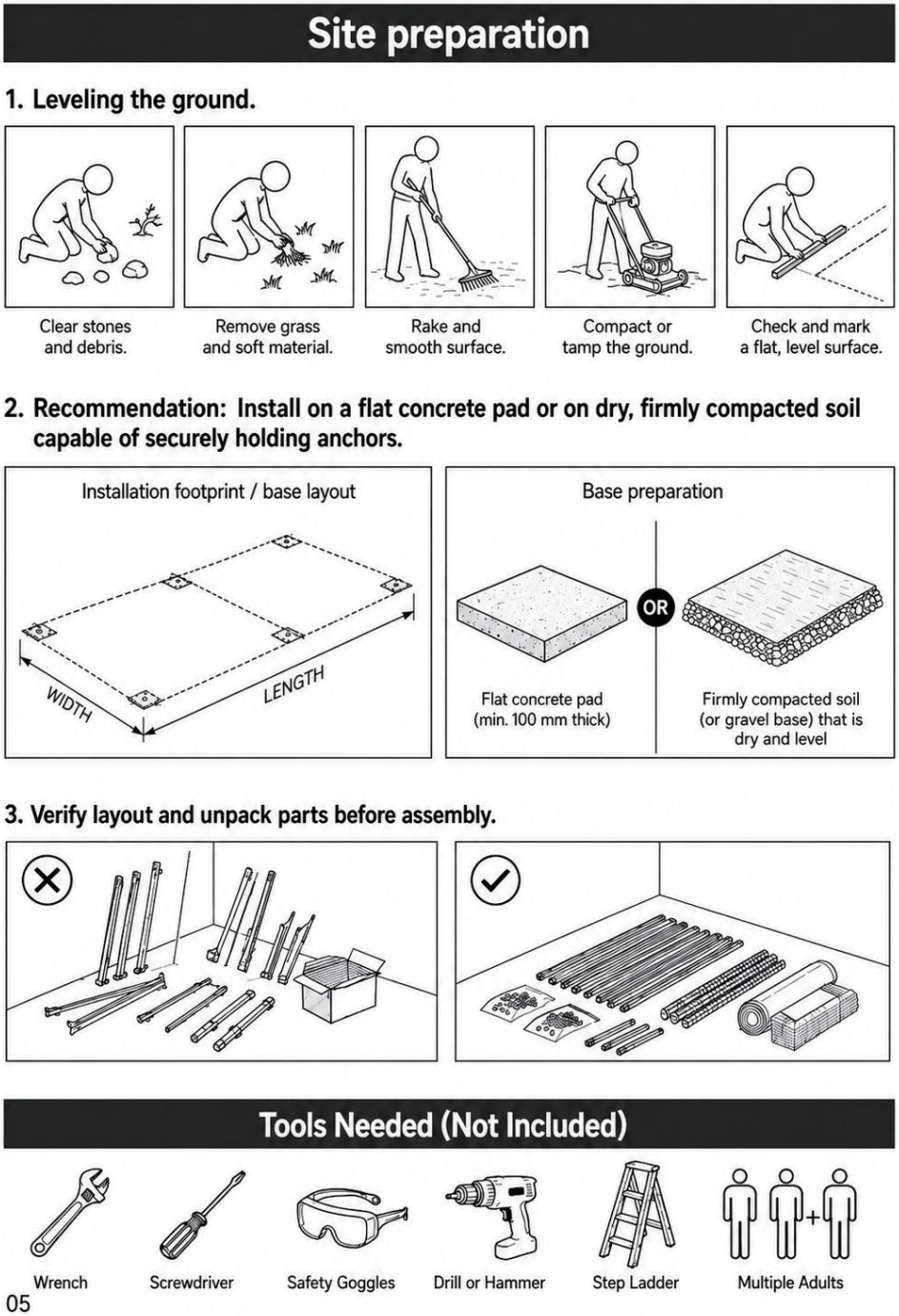

Check the Package Contents

The product ships in Box 1 of 2 and Box 2 of 2. Match each numbered part below before assembly. Place small hardware in a tray so screws, bolts, and fasteners are not lost.

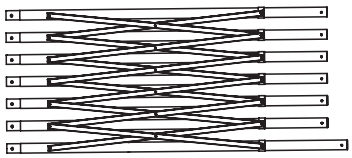	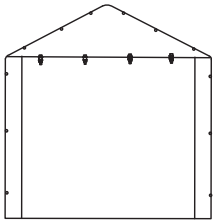	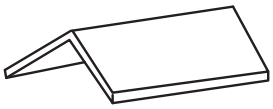
(1) x 2	(13) x 2	(14) x 1

BOX 2/2

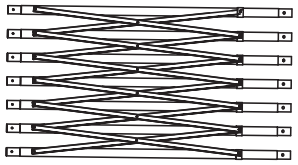			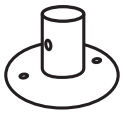
(2) x 2	(3) x 7	(3a) x 14	(4) x 2
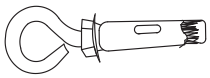		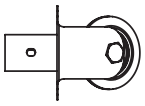	
(5) x 6	(6) x 2	(7) x 12	(8) x 6
		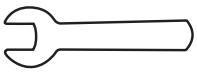	
(9) x 24	(10) x 12	x 2	x 2
			
x 2	x 2		

Step 1 - Install Wheels and Footplates

Parts needed: No.1 x 2, No.4 x 2, No.7 x 12, No.8 x 2, No.10 x 12

- Attach six wheels No.7 to each frame No.1 and secure them with screws No.10.
- Attach one footplate No.4 to each frame No.1 and secure it with screw No.8.
- Tighten hardware evenly. Do not overtighten.

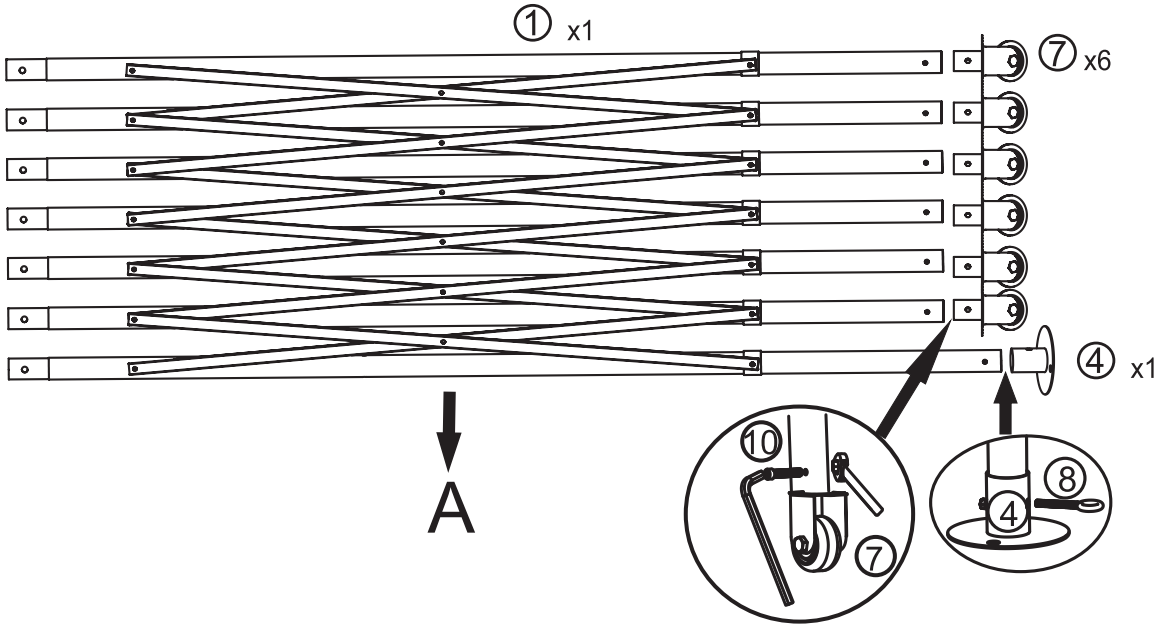

Step 2 - Connect Steel Tubes

Parts needed: No.2 x 1, No.3 x 7

- Insert seven steel tubes No.3 into frame No.2.
- Confirm each spring button pops out fully and locks in place.

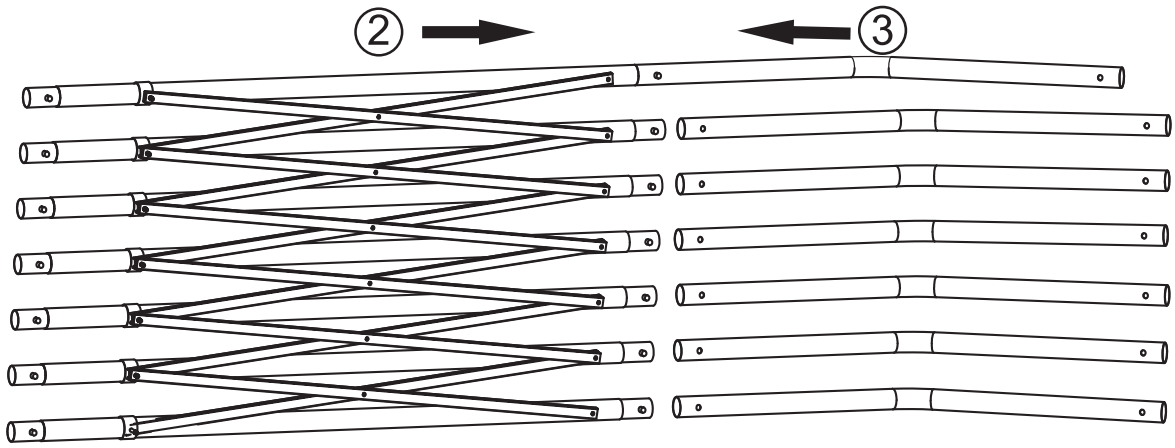

Step 3 - Attach the Opposite Frame

Parts needed: No.2 x 1

- Attach the second frame No.2 to the other ends of steel tubes No.3.
- Insert the tubes evenly to prevent bending or jamming.
- Confirm each spring button is fully engaged.

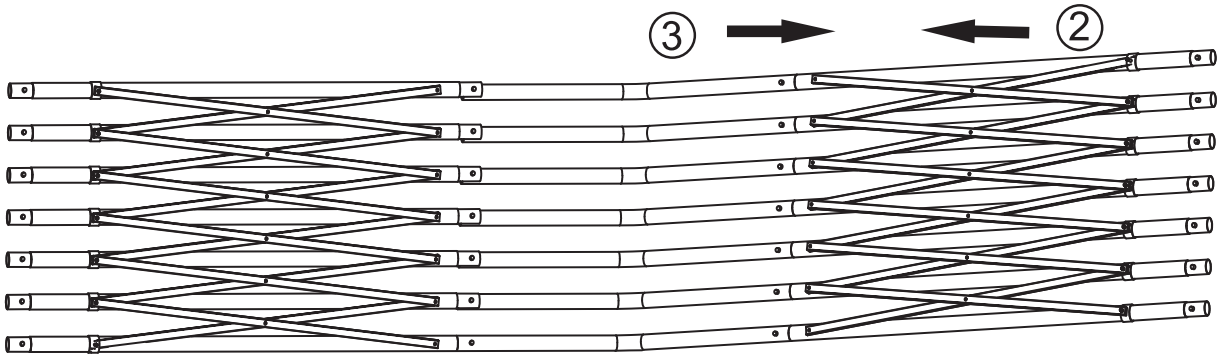

Step 4 - Install Extension Tubes

Parts needed: No.3a x 14

- Install seven tubes No.3a on each end of the frame assembled in Step 3.
- Make sure every spring button locks securely before moving to the next step.

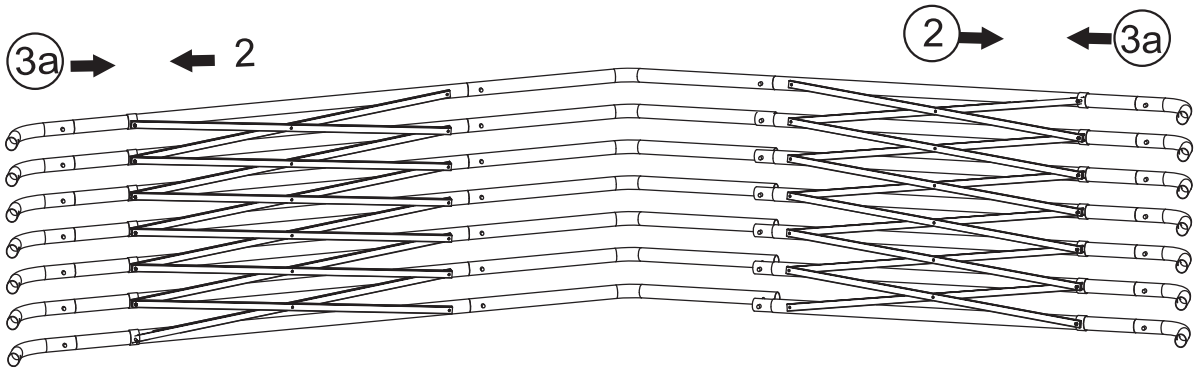

Step 5 - Attach End Frames

Parts needed: Frame A x 2

- Attach frame A to both ends of the canopy frame.
- Check that both end frames face the same direction and lock securely.

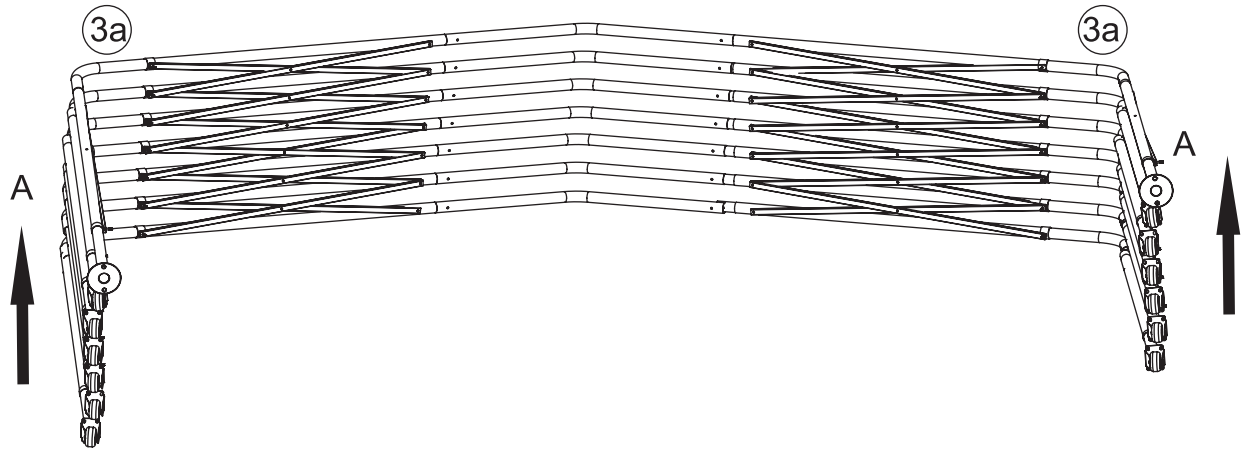

Step 6 - Open and Anchor the Frame

Parts needed: No.5 x 6, No.6 x 2, No.8 x 2

- Open the frame to the correct position and secure it with screws No.8.
- Fix the wheels to the floor using chains No.6 and expansion bolts No.5.
- Fix each footplate No.4 to the floor with expansion bolts No.5.

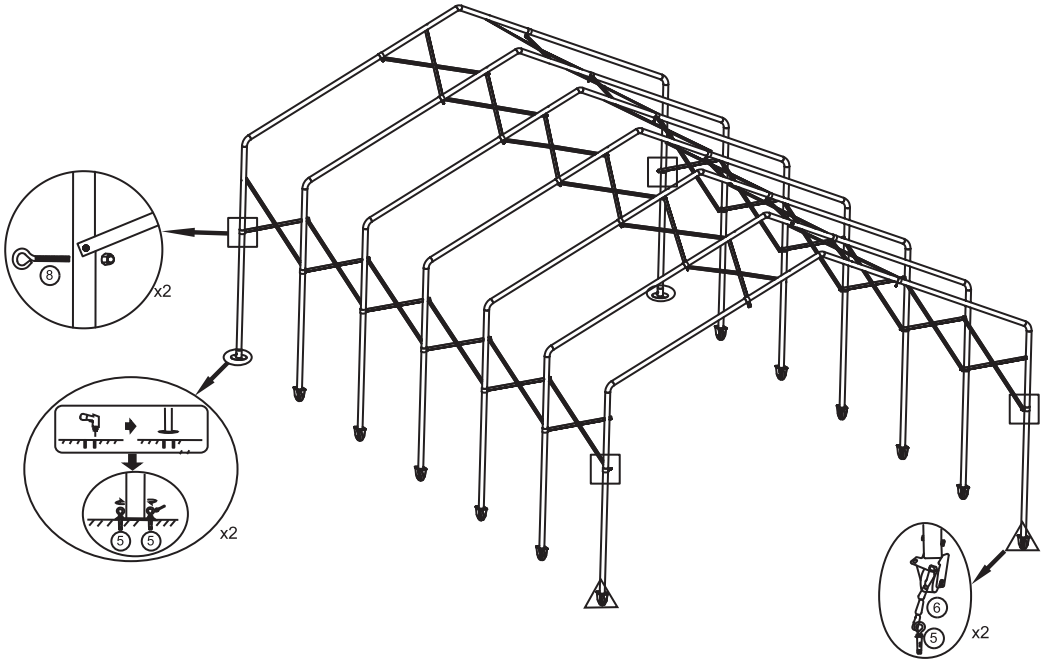

Step 7 - Install the Cover

Parts needed: No.14 x 1

- Place cover No.14 over the frame with all four corners hanging evenly.
- Adjust each rope in sequence so the cover sits flat and balanced.
- Tie one end of each rope to wheel No.7 and the other end to screw No.8 on the fixed footplate No.4.
- Do not tighten one side while the other side is loose.

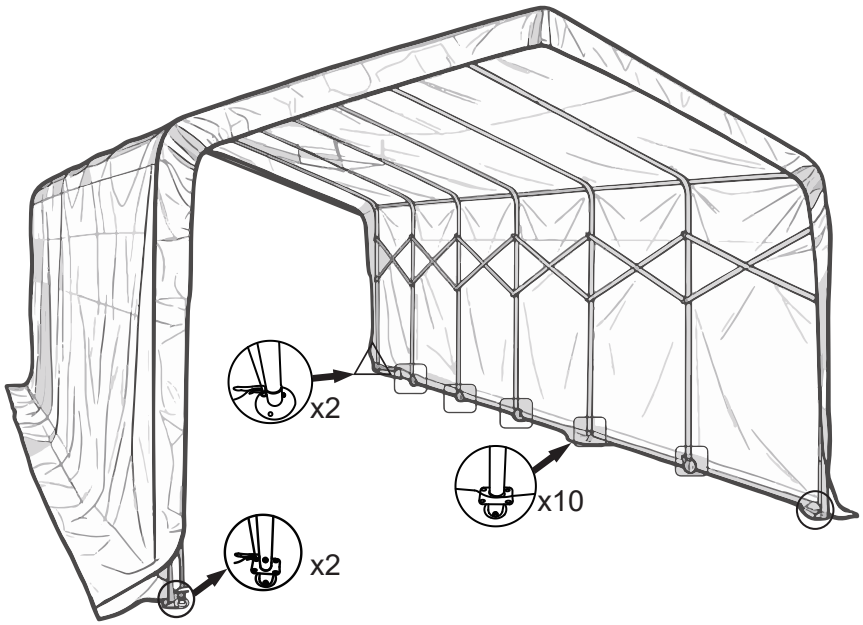

Step 8 - Install the Side Walls

Parts needed: No.13 x 2, No.9 x 24

- Attach side walls No.13 to the cover and frame.
- Secure the side walls with fasteners No.9 at the attachment points shown in the diagram.
- Final check: all spring buttons are locked, anchors are tight, and the cover is evenly tensioned.

