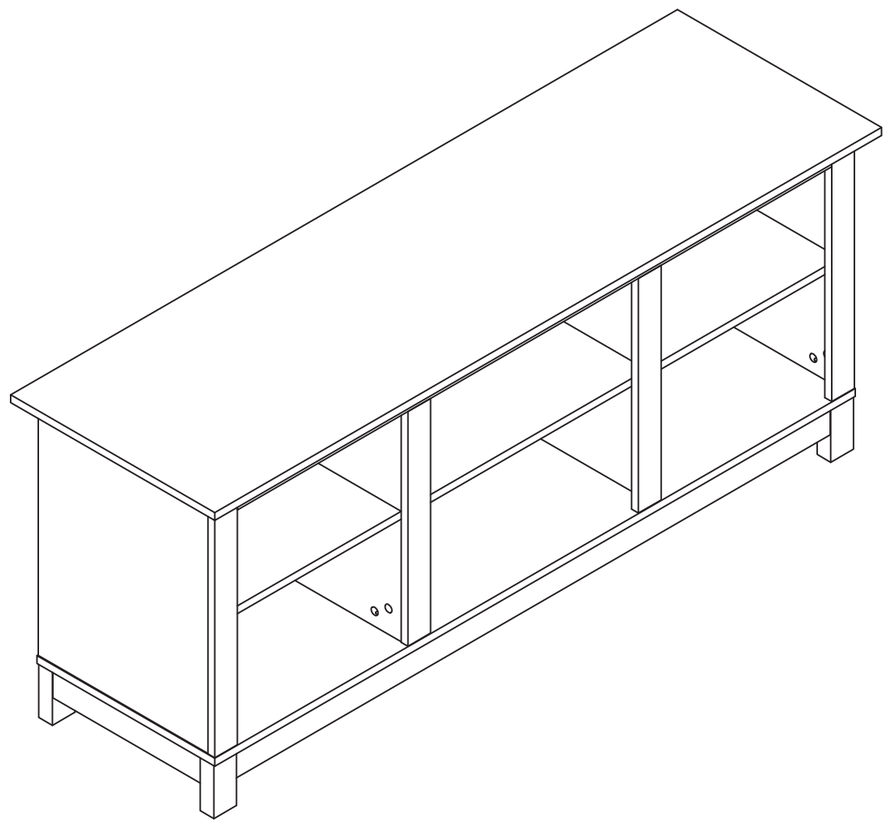

USER'S MANUAL

58 Inch TV Stand

THIS INSTRUCTION BOOKLET CONTAINS **IMPORTANT** SAFETY INFORMATION. PLEASE READ AND KEEP FOR FUTURE REFERENCE.

FLOOR AREA
2MX2M

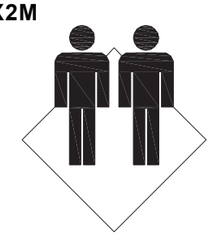

ASSEMBLED BY 2 ADULTS

Before You Start

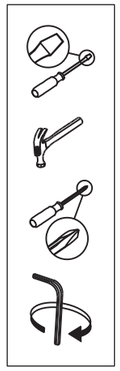

⚠ Read each step carefully before starting. It is very important to ensure each step followed in correct order, otherwise assembly difficulties may occur.

⚠ Most of board parts are labeled or stamped on the raw edges. Have a check to make sure all parts are included.

⚠ Work in a spacious area, preferably on a carpet close to where the unit will be used.

⚠ Keep the handtools close at hand. Do not use power tools to assemble your furniture. They may scratch or damage the parts.

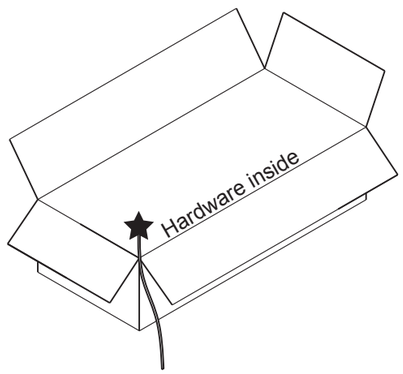

Board Identification

Not actual size

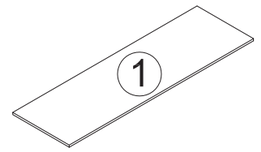

Board x1

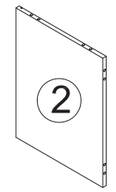

side board x2

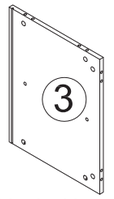

Vertical board x2

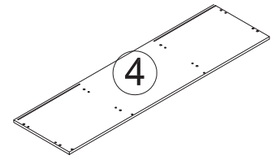

Bottom board x1

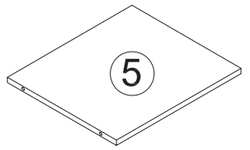

Large layer board x2



front plate x1



front plate x1

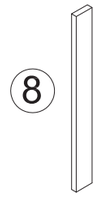

Left front plate x1

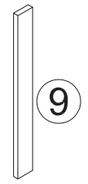

Right front plate x1

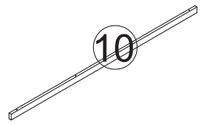

Front apron x1

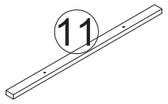

Dam board x1

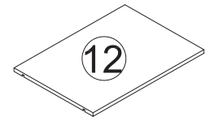

Small layer board x1

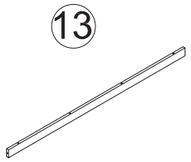

Leg board x2

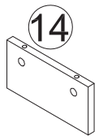

Leg board x1

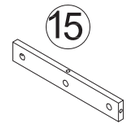

Leg board x2

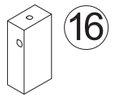

Legx2



Leg x2

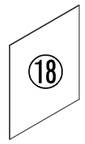

Back board x2

Board Identification

Not actual size

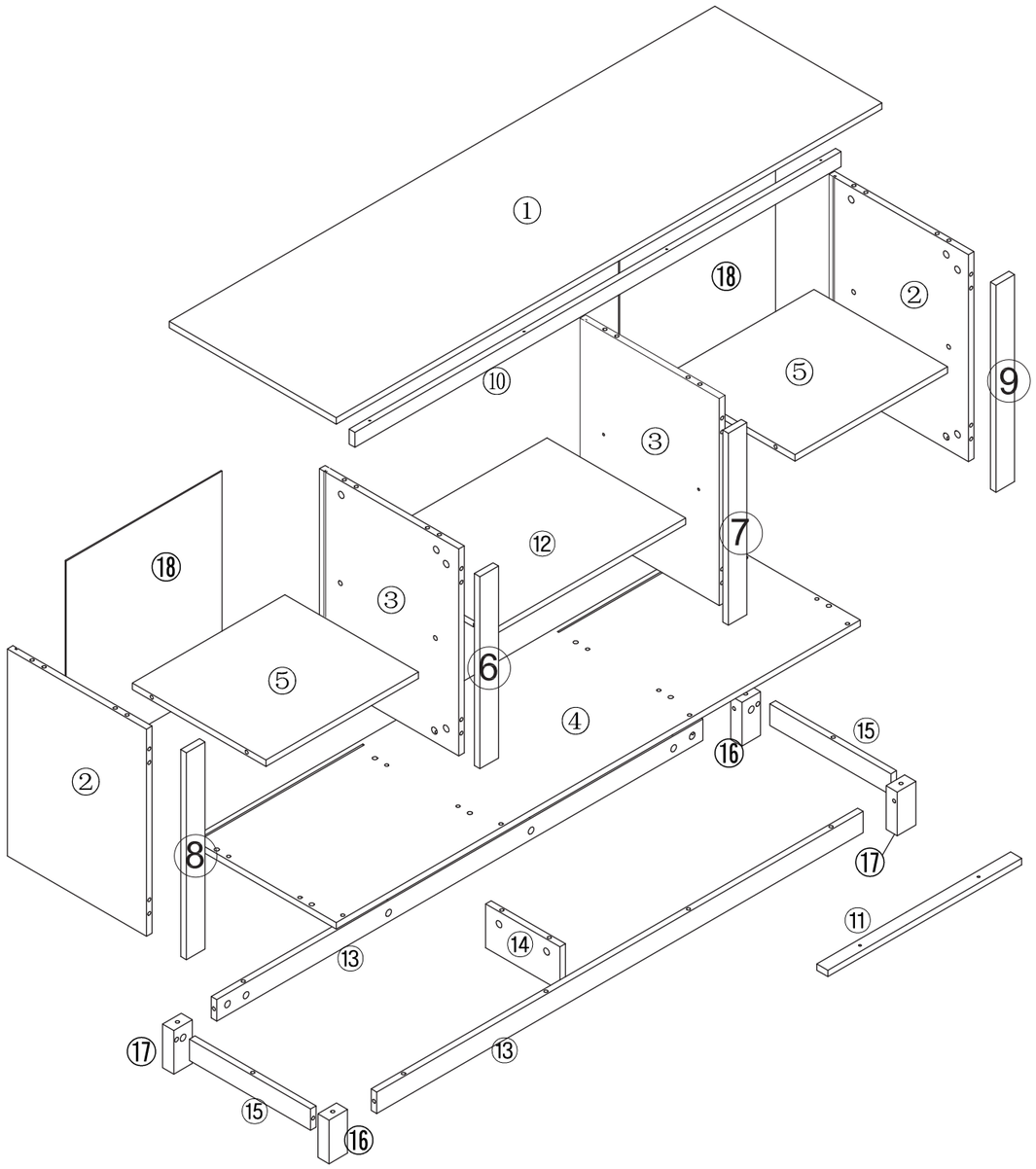

Hardware List

Actual size

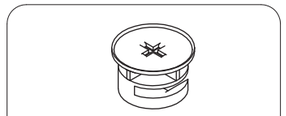

Ø15 × 10mm

A × 56

CAM LOCK

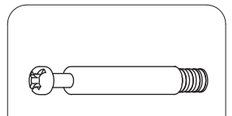

B × 56

CAM BOLT

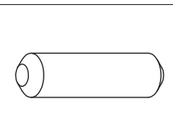

Ø8 × 30mm

C × 28

WOOD DOWEL

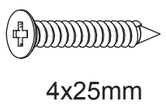

4x25mm

D × 2

SCREW

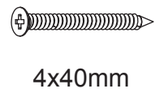

4x40mm

E × 4

SCREW

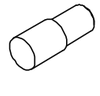

H × 4

SUPPORT PIN

STEP 1

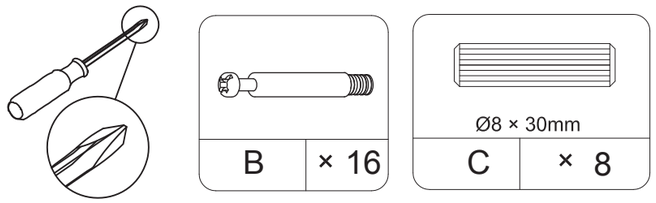

B × 16

Ø8 × 30mm

C × 8

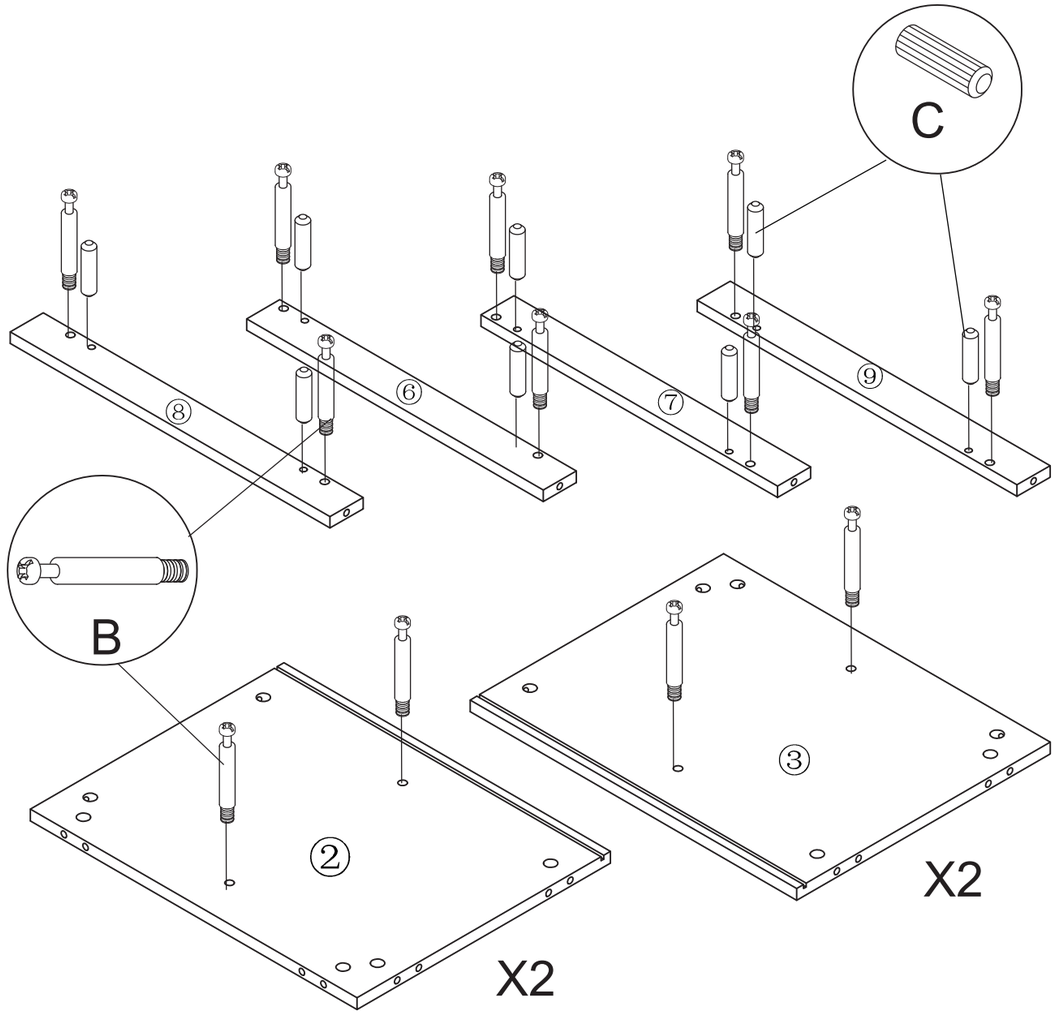

STEP 2

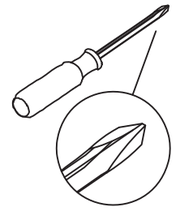

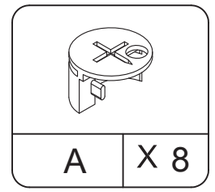

A X 8

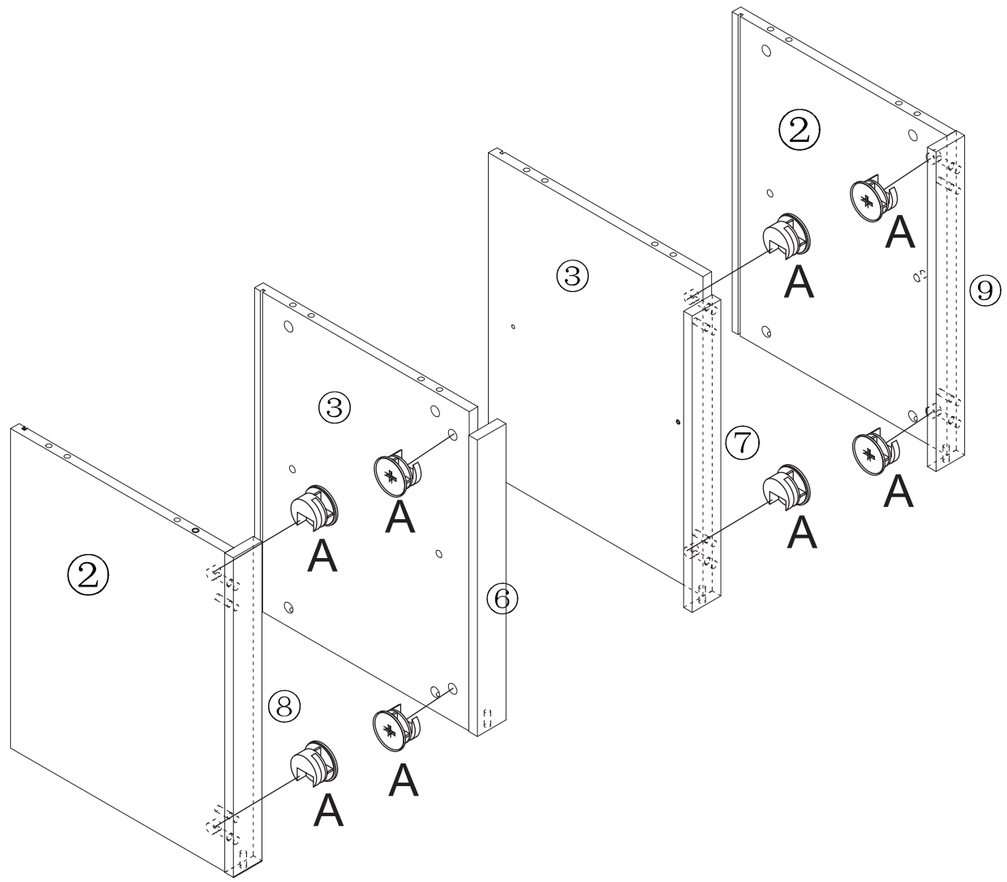

STEP 3

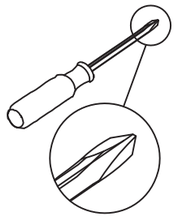

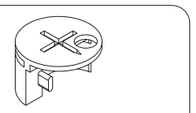

Ø15 × 10mm	
A	× 8

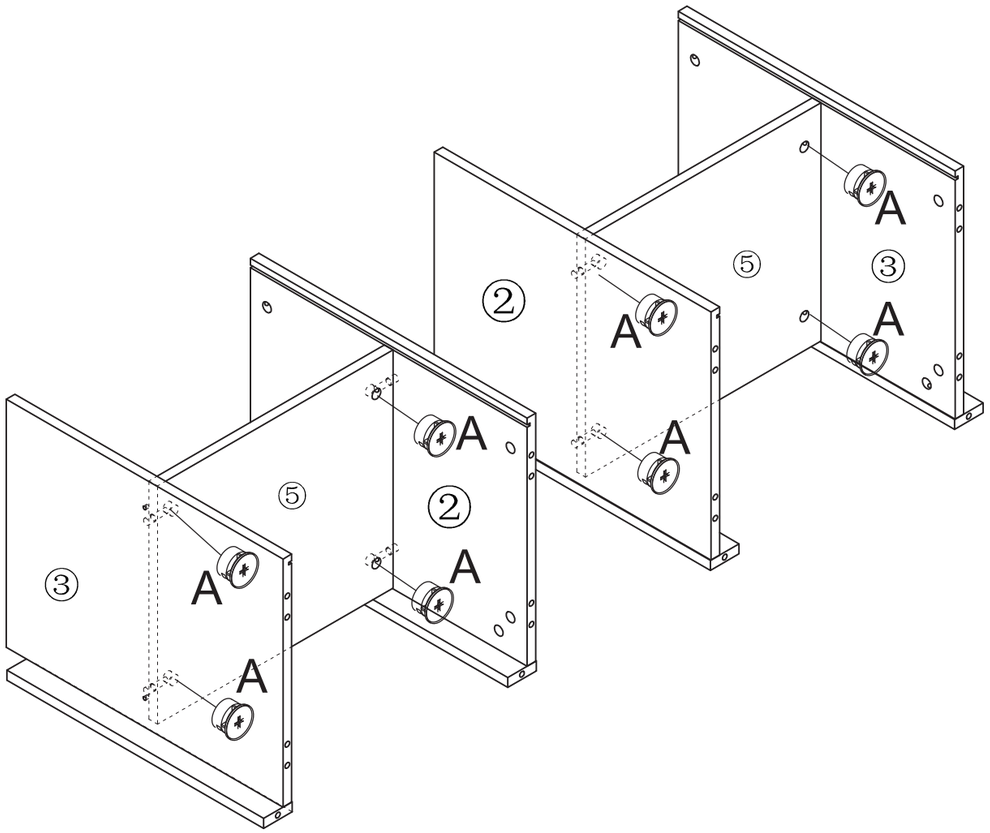

STEP 4

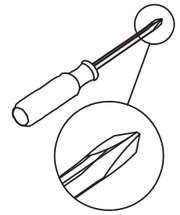

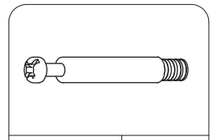

B	× 24

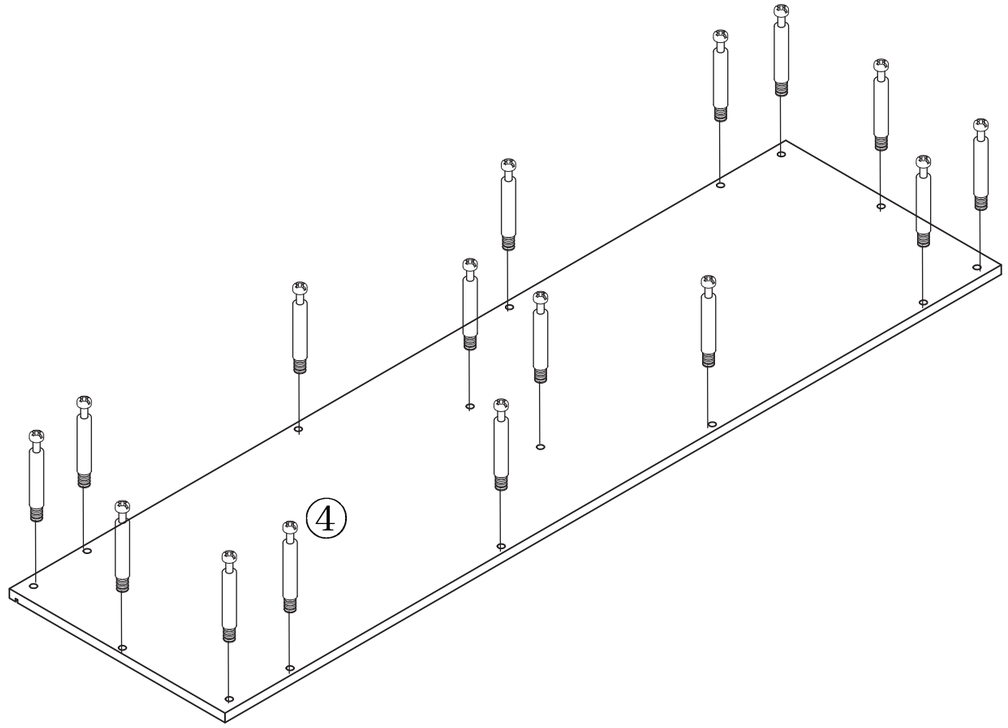

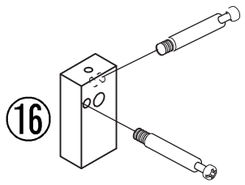

X2

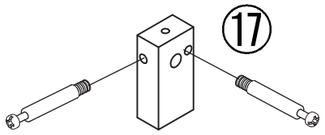

X2

STEP 5

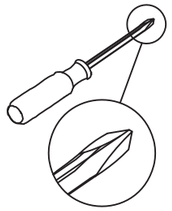

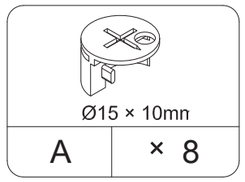

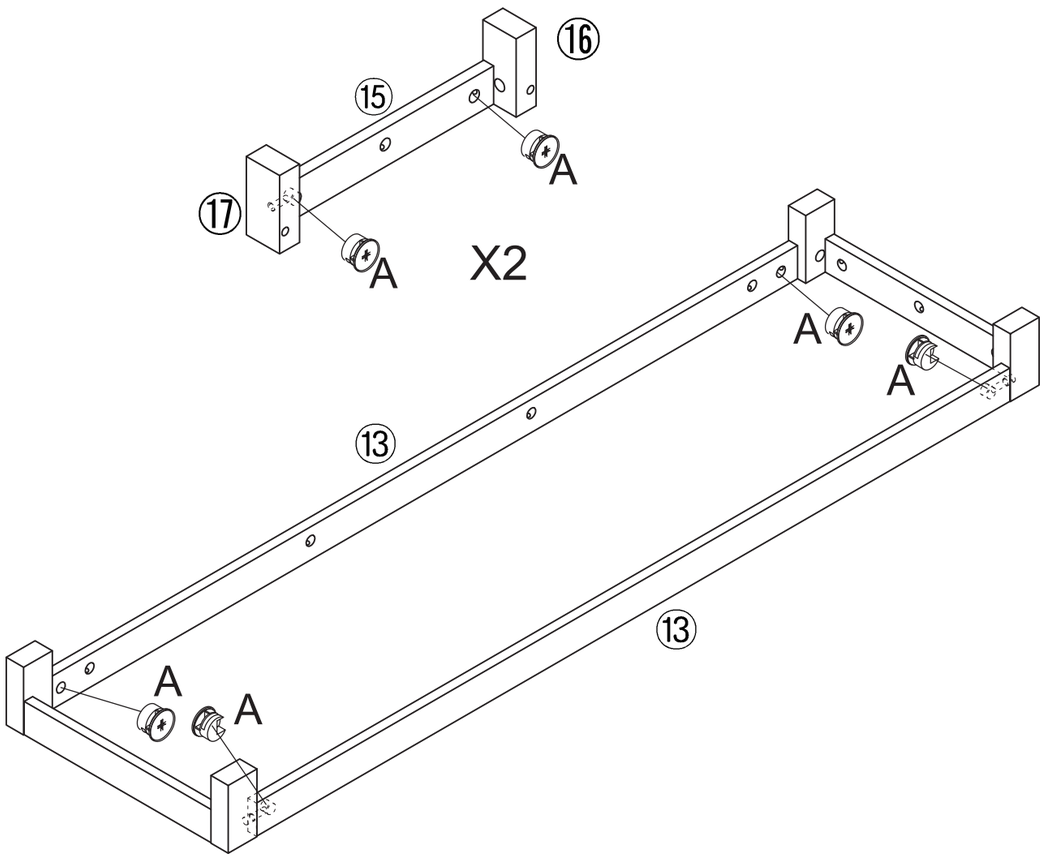

STEP 6

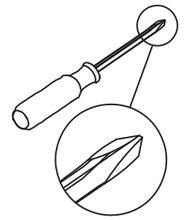

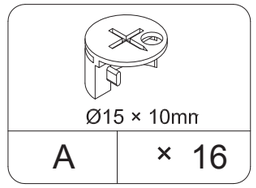

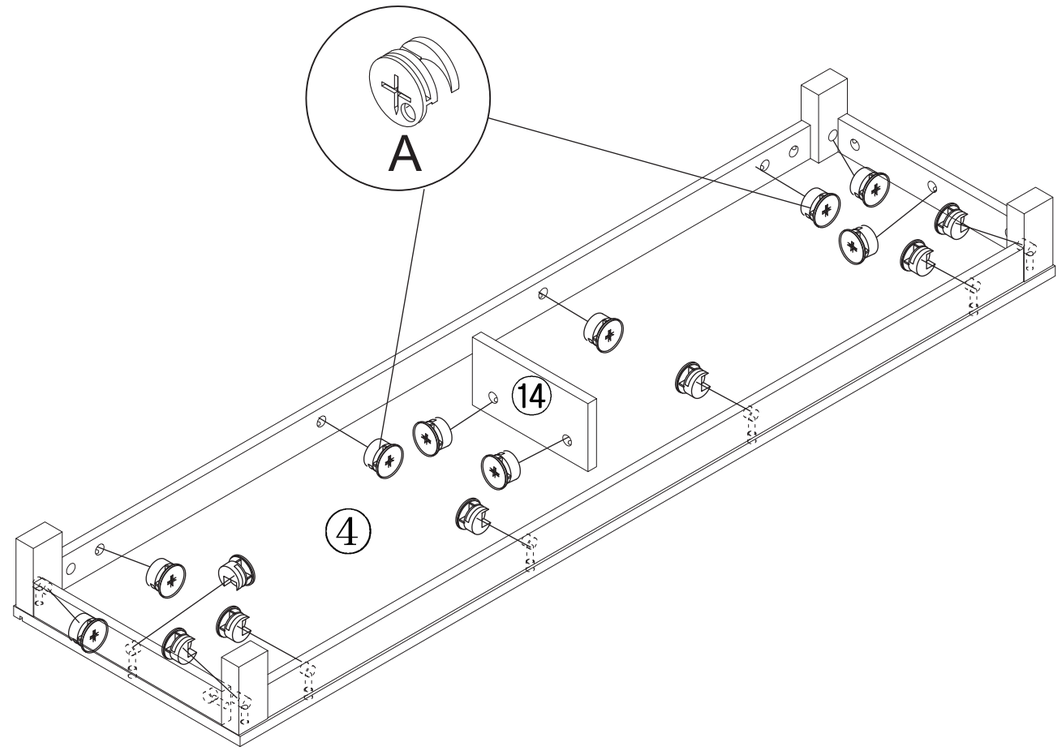

STEP 7

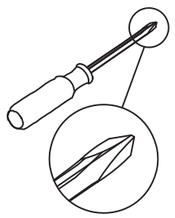

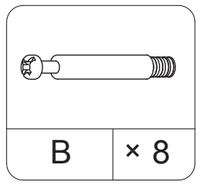

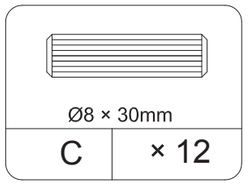

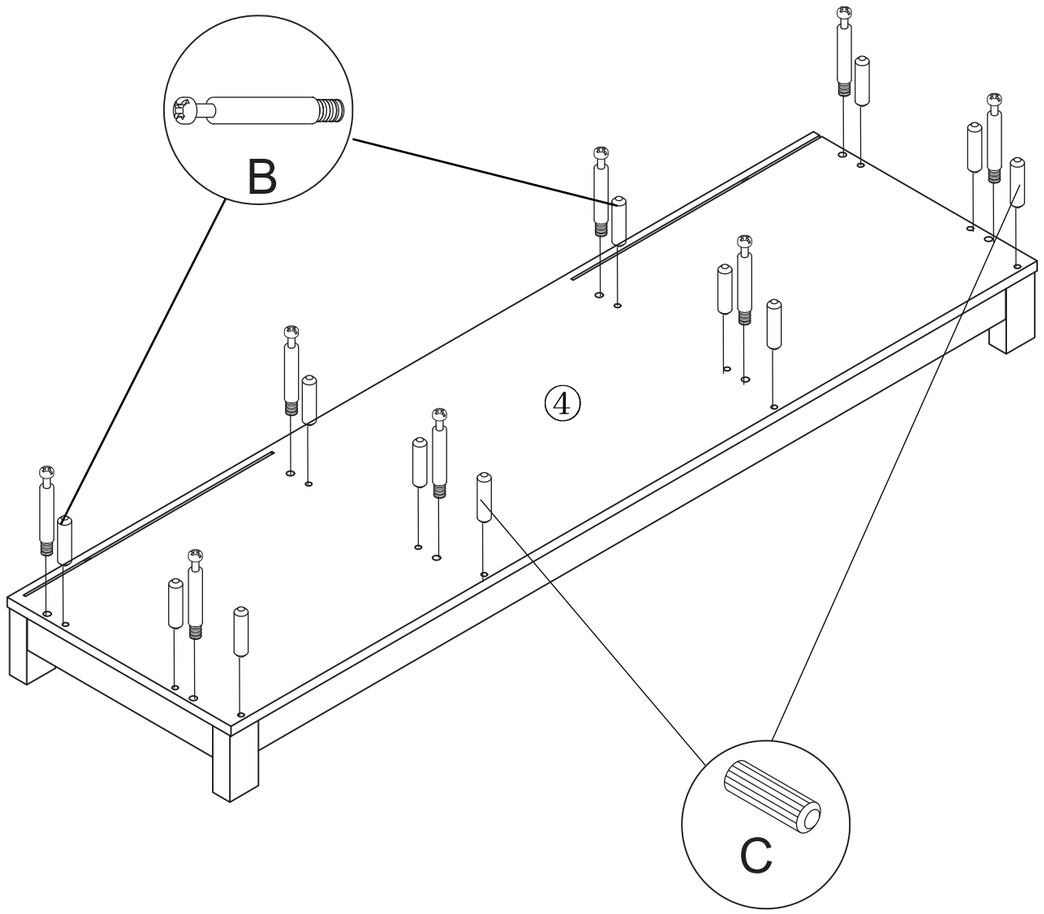

STEP 8

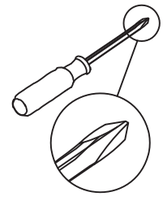

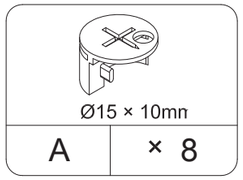

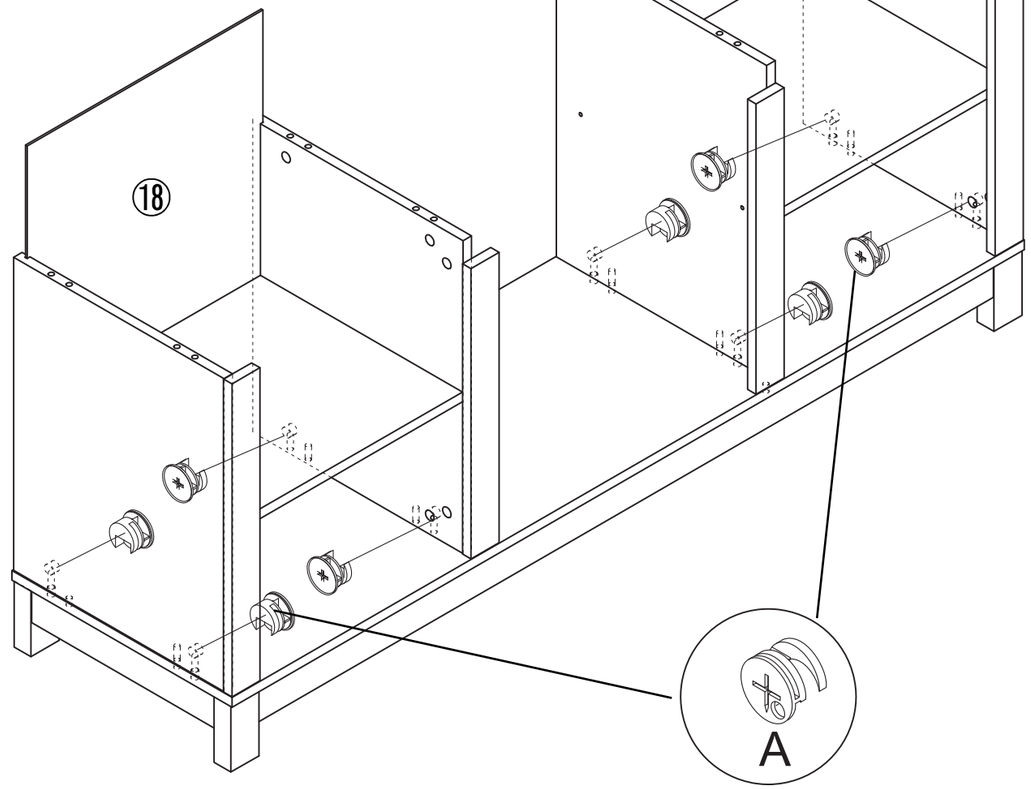

STEP 9

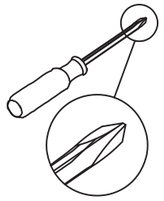

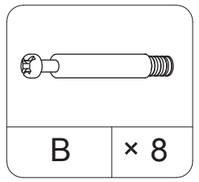

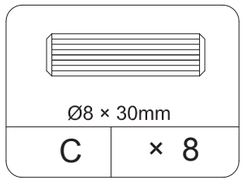

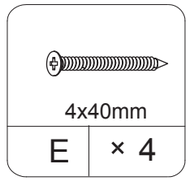

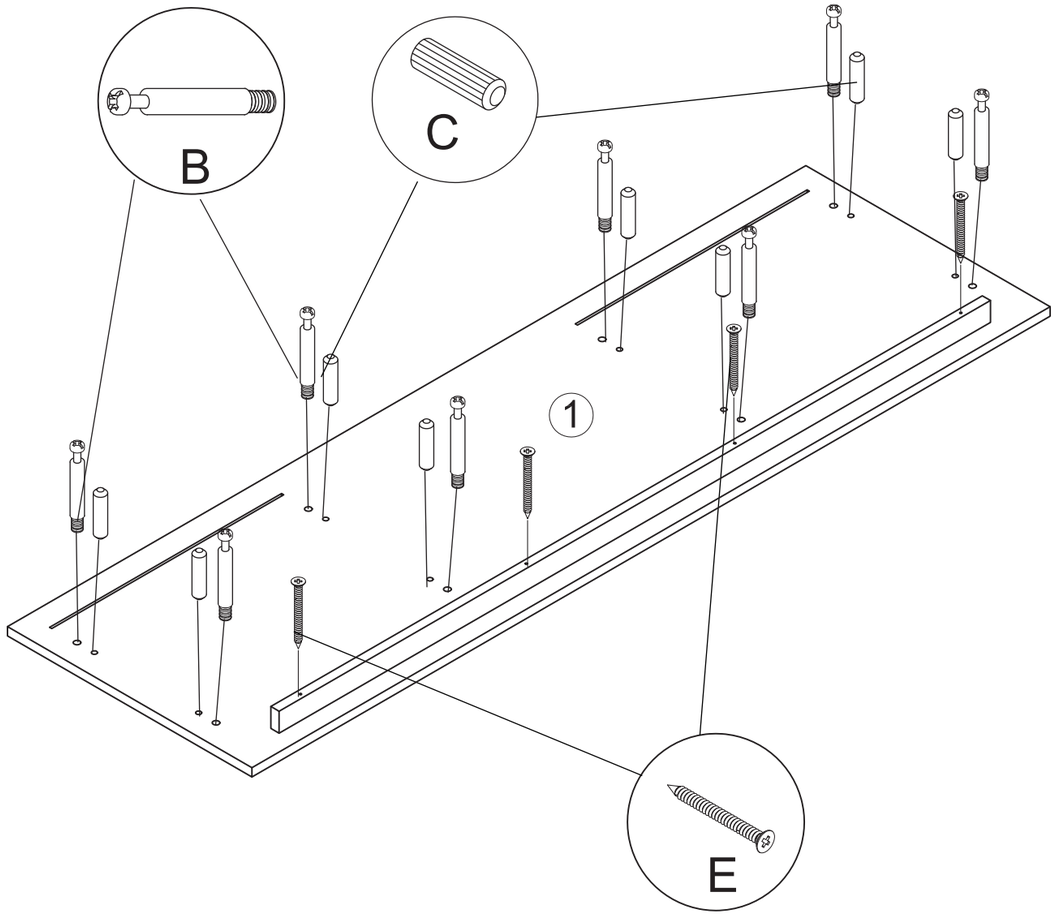

STEP 10

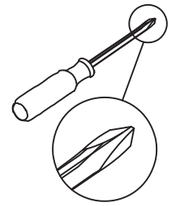

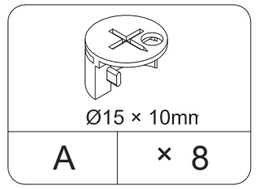

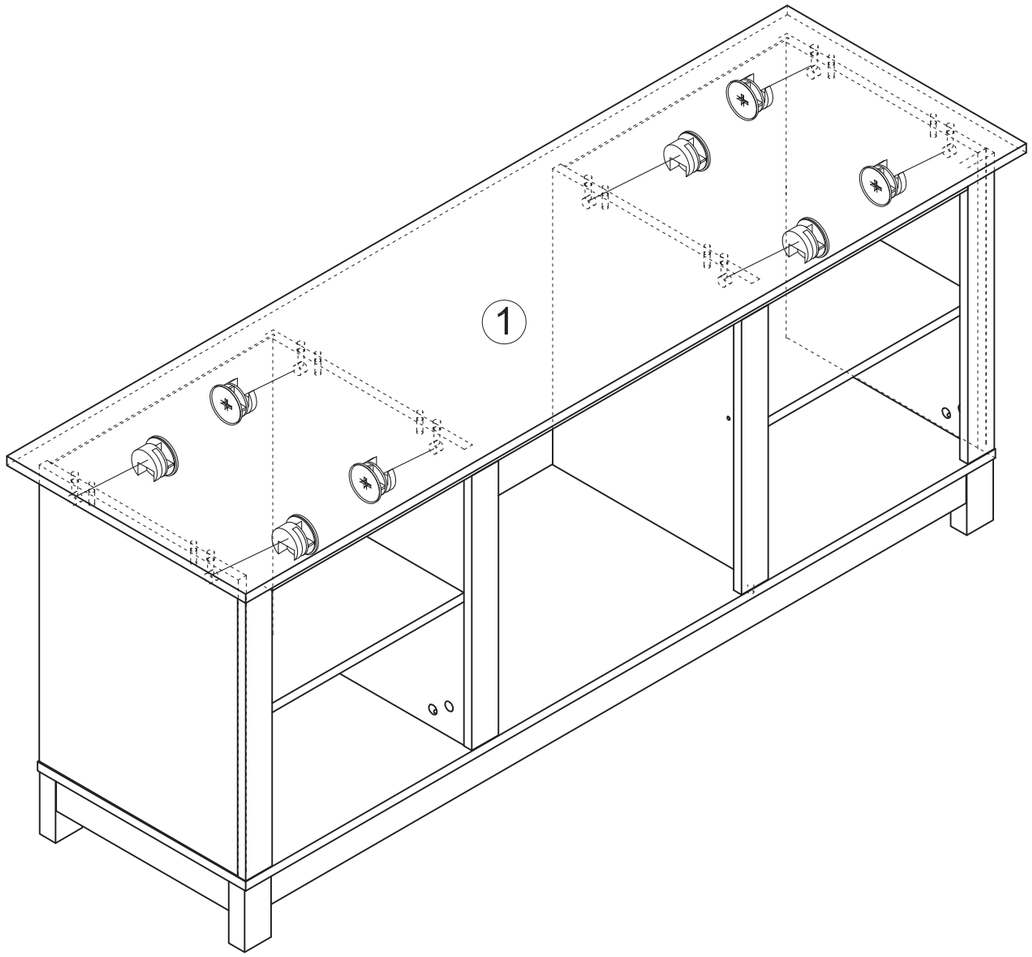

STEP 11

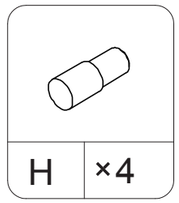

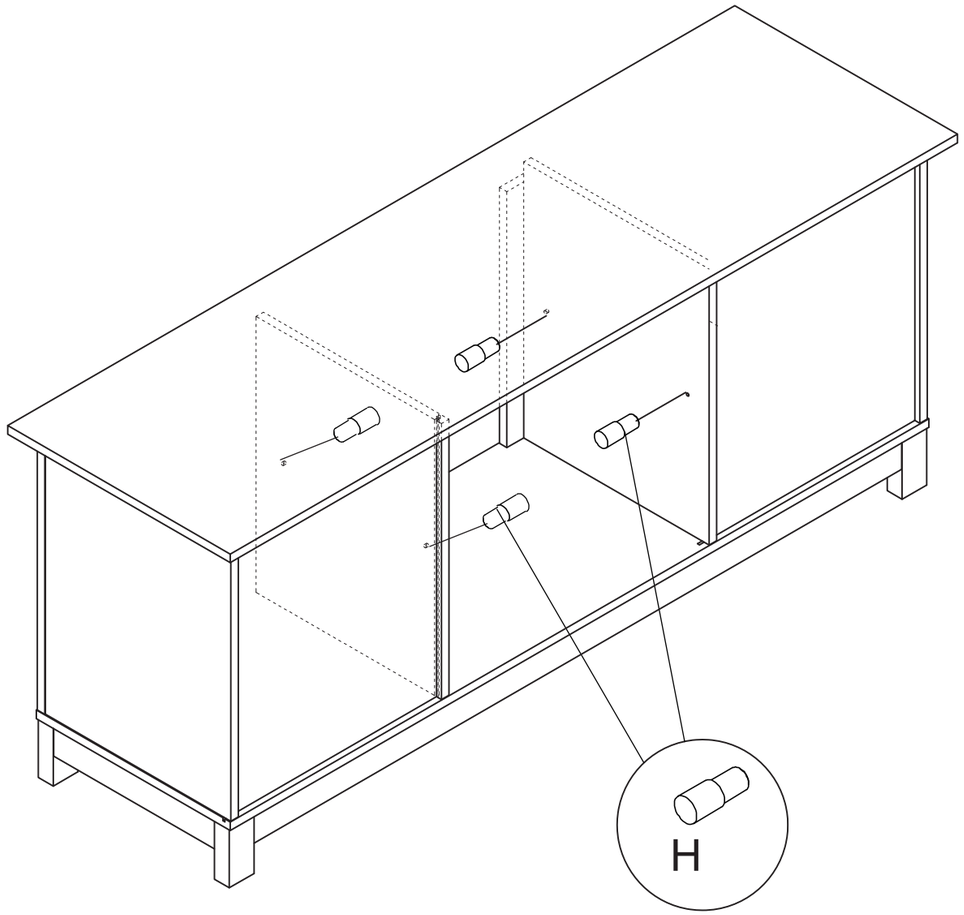

STEP 12

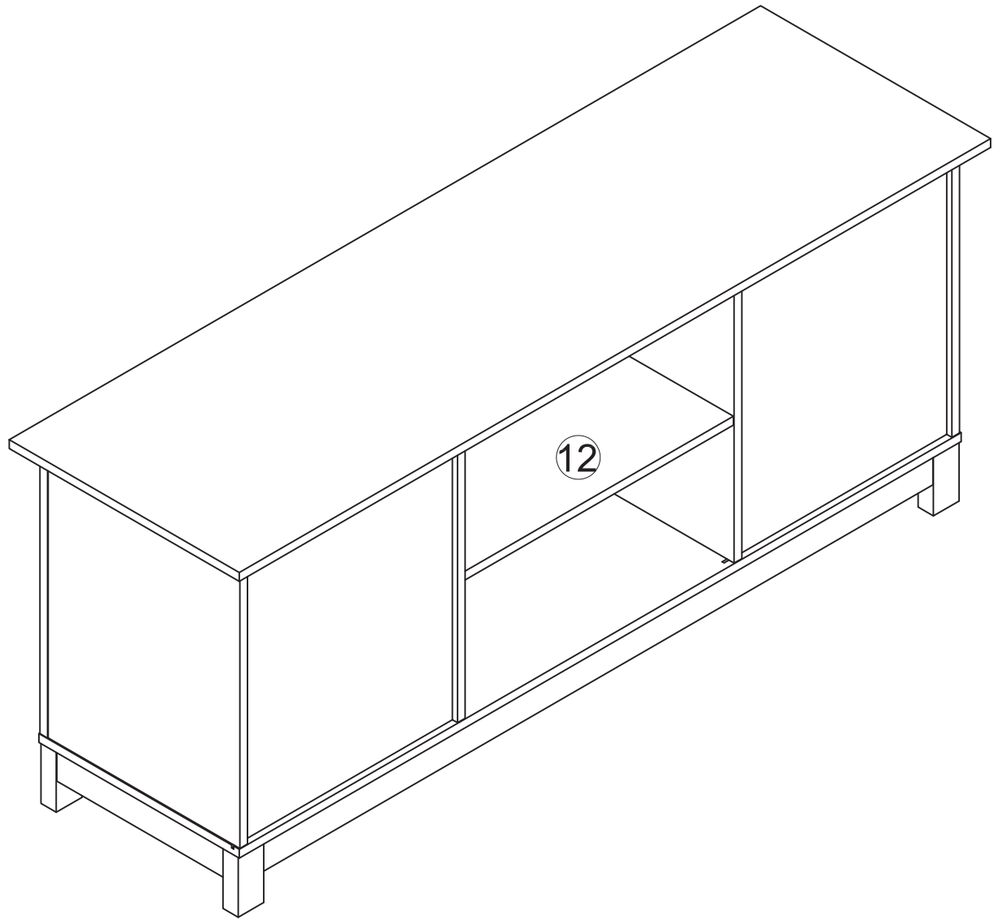

STEP 13

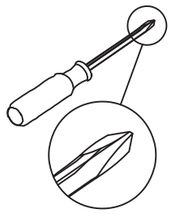

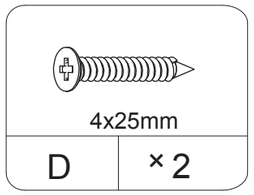

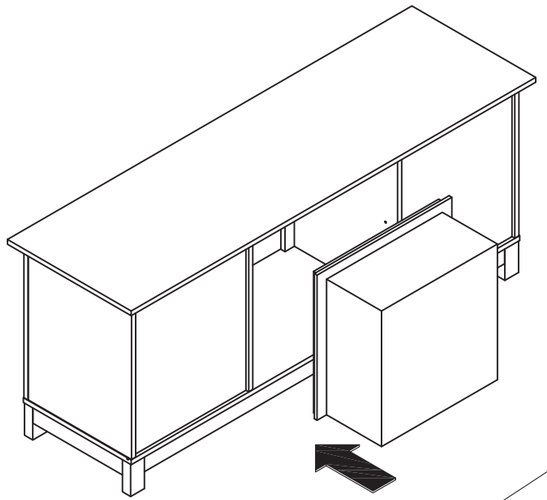

The middle shelf can be removed to place a fireplace.

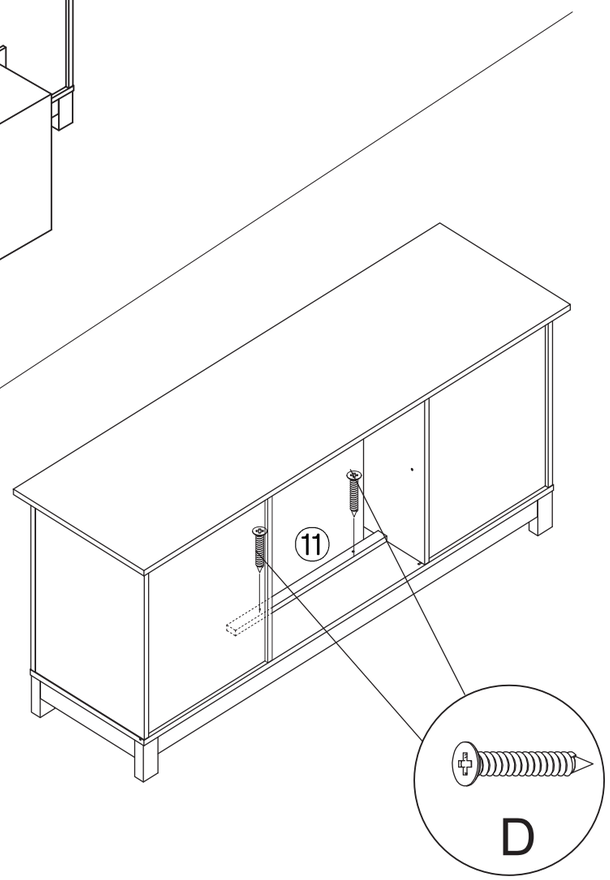

STEP 14

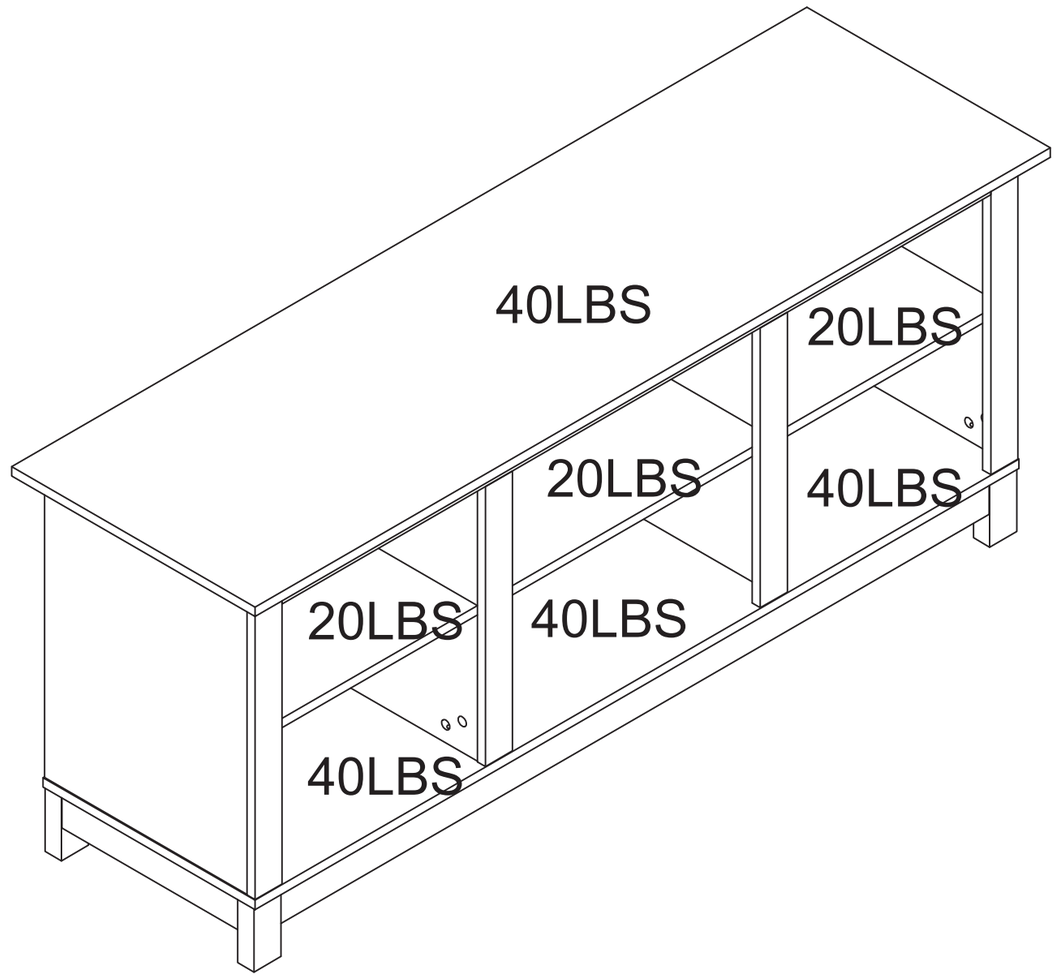

Care and Maintenance

Use a soft, clean cloth that will not scratch the surface when dusting.
Use of furniture polish is not necessary.
Should you choose to use polish, test first in an inconspicuous area.
Using solvents of any kind on your furniture may damage the finish.
Never use water to clean your furniture as it may cause damage to the finish.
Liquid spills should be removed immediately. Using a soft clean cloth, blot the spill gently. Avoid rubbing.
Check bolts/screws periodically and tighten them if necessary.

Further advice about wood furniture care

It is best to keep your furniture in a climate-controlled environment. Extreme temperature and humidity changes can cause fading, warping, shrinking and splitting of wood.
It is advised to keep furniture away from direct sunlight as sun may damage the finish.
Proper care and cleaning at home will extend the life of your purchase. Following these important and helpful tips will enhance your furniture as it ages.