60″

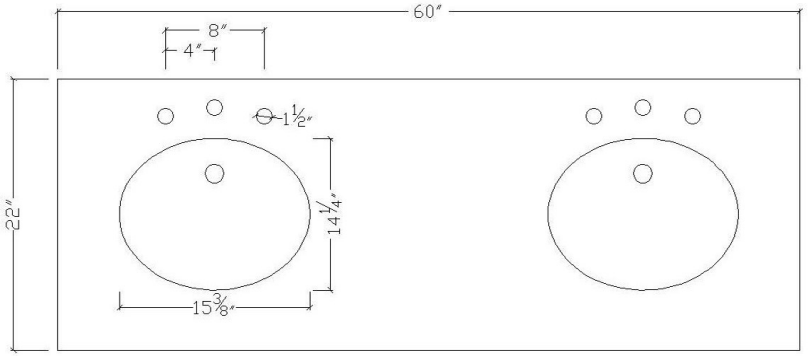

TOP VIEW

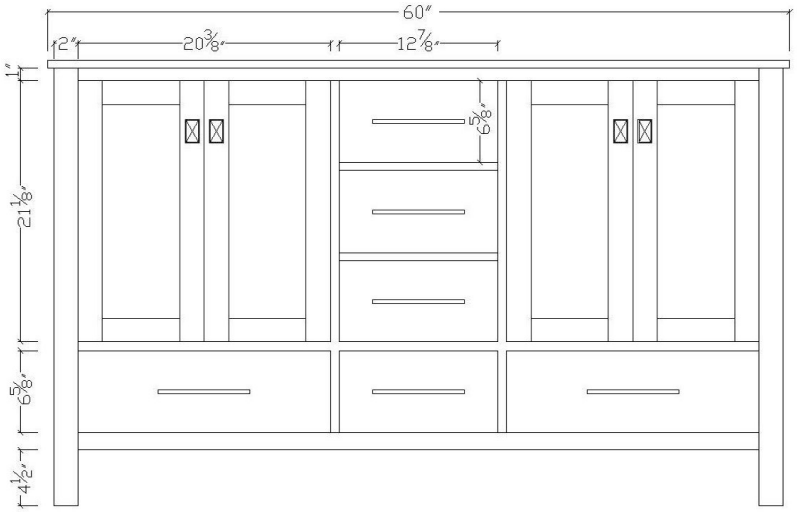

FRONT VIEW

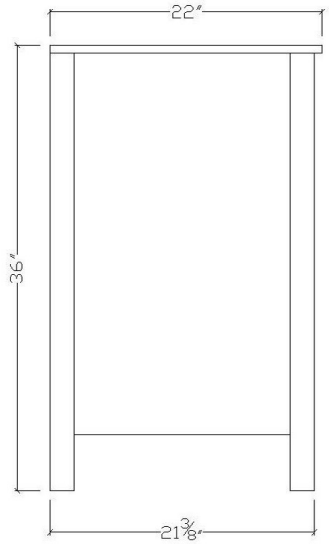

SIDE VIEW

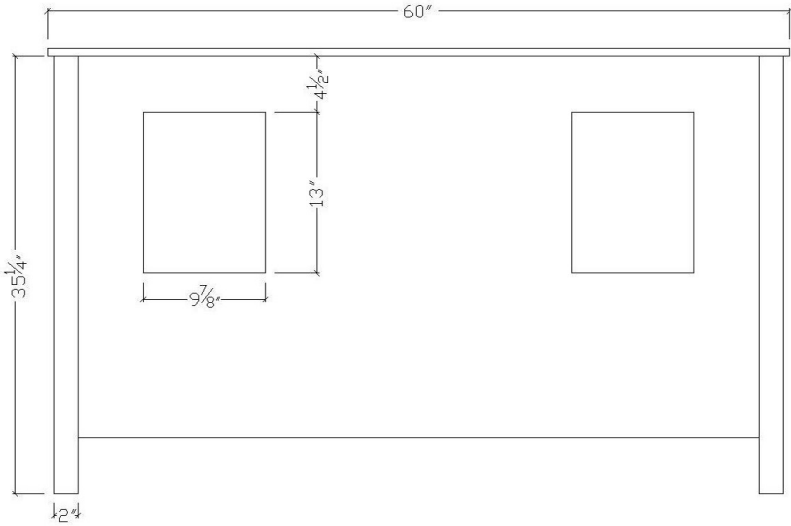

BACK VIEW

mensions are nominal and may vary within tolerances.The measurements are subject to change or cancellation.No responsibility is assumed for use of superseded or voided pag