CL21030-1

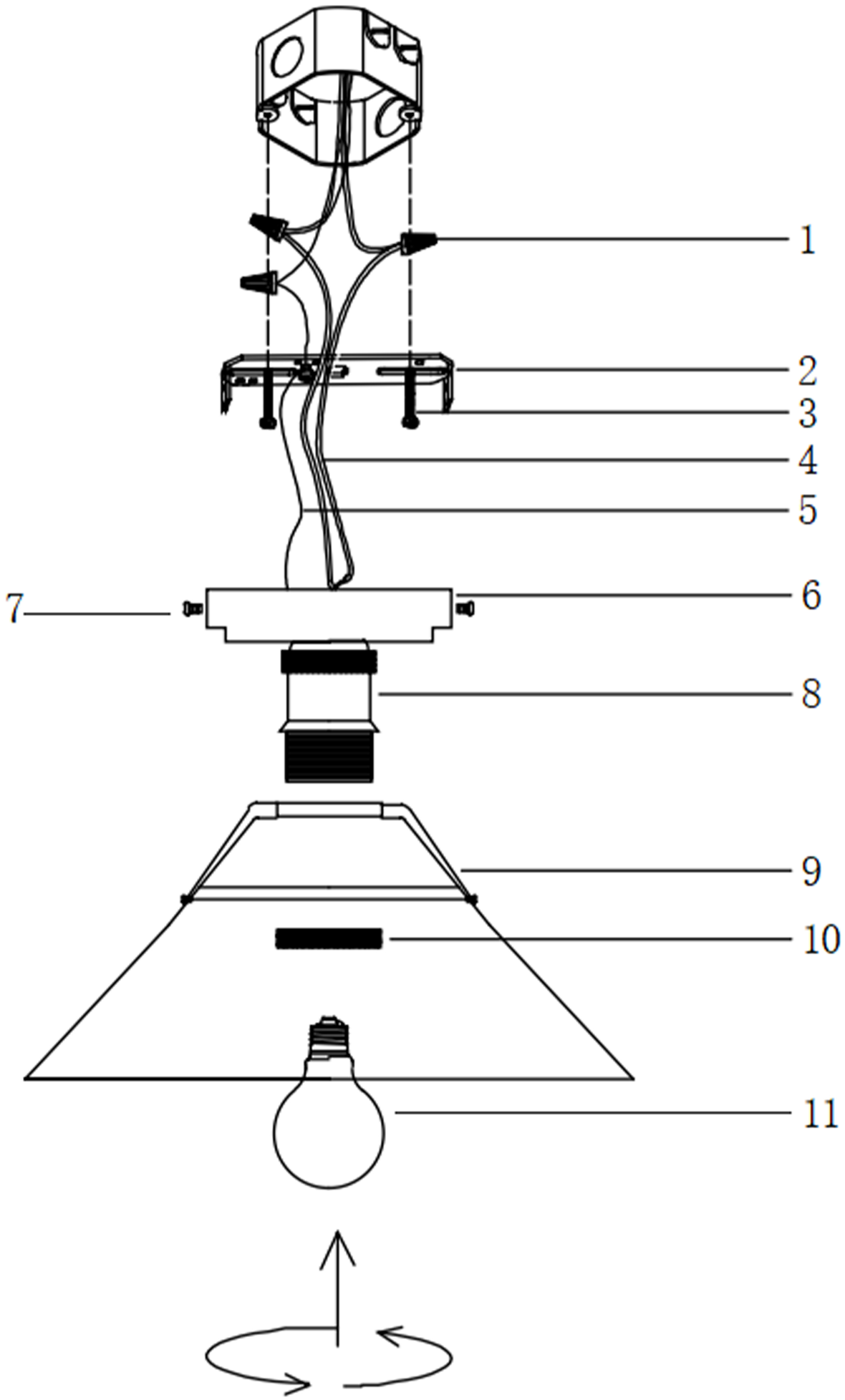

Installation Steps：

Step 1: Fix the mounting plate (2) to the junction box with screws (3).
Step 2: Connect the power cable (4) of the lamp body to the external power cable using a wiring cap (1), secure the ground cable (5) with a green ground screw, and then connect the wiring cap (1) to the external ground cable.
Step 3: Fix the straight edge basin (6) to the mounting plate (2) with screws (7).
Step 4: Fix the metal lampshade (9) on the lamp holder (8) with the lamp holder ring (10).
Step 5: Install the bulb (not included)(11) on the lamp holder (8).

Accessories：

2: Mounting Plate*1	
3: Mounting Plate*2	
7: Mounting Screw*2	
1: Wiring cap*3	
9: metal cover*1	
10: lamp holder*1	

Notice： This light fixture should be installed in accordance with all applicable, local installation codes, and by a person familiar with the construction and operation of it, as well as the hazards involved. Inspect items and contents carefully. If any damage or defect is found, do not install it.