THANKS FOR WATCHING

Your feedback is invaluable to us and we would love to hear about your experience. Please take the time to leave us a review.

Installation Manual-BV B12842

MOTIVATE YOUR LIFE !

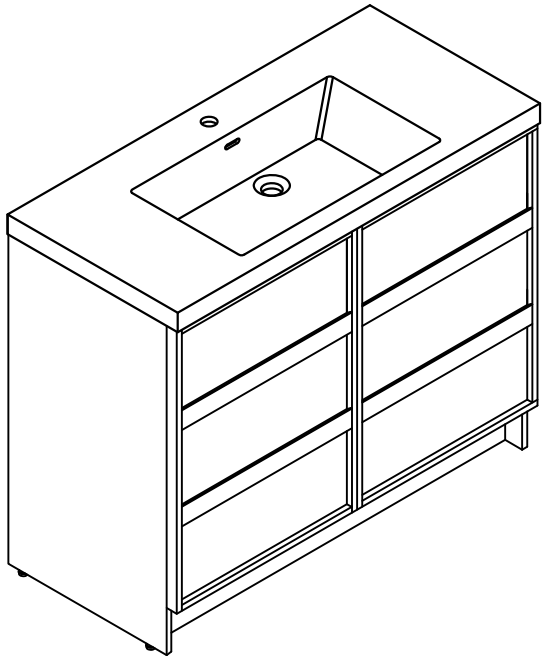

Thank you for shopping with us!

We encourage you to take a few minutes to go through this booklet. It contains important information on installation and care tips to keep your furniture looking as good as new.

Item NO.:BV B12842

Hardware

NO.	Draw	QTY
A	Screws Ø4x14mm	56
B	Two-in-one connector	26
C	Two-in-one connector	26
D	Wood plug	4
E	Plastic anchor(Ø10mm)	2
F	Screws for fix on the wall	2
G	Bracket (53x70x44mm)	2
H	Bracket (19x19x35mm)	2

NO.	Draw	QTY
I	Hinges（Full cover）	6
J	Adjustable feet	4
K	Movable laminate support	4
L	Anti-collision gasket	4
M	Screwdriver	1

Recommended tools

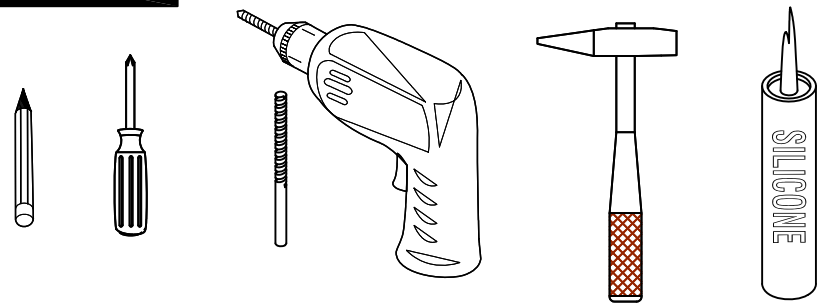

Dimensions

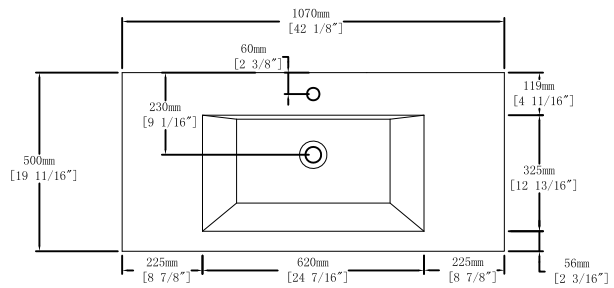

Top View

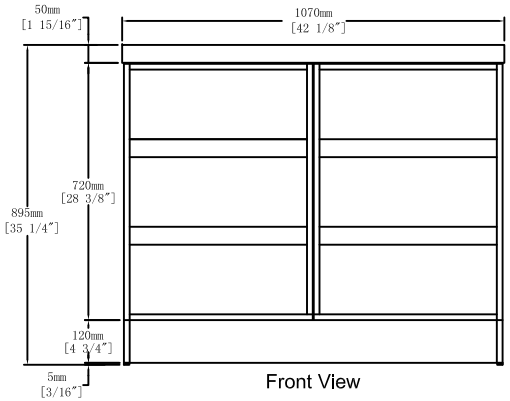

Front View

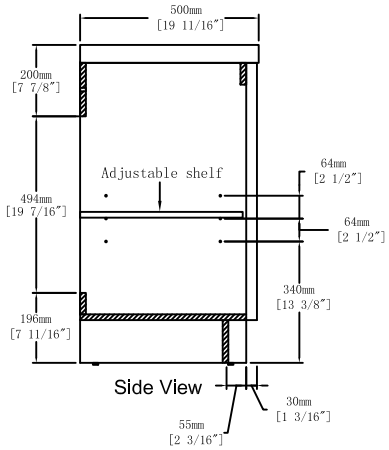

Side View

CARE CLEANING AND MAINTENANCE

1.Dust regularly with a soft , dry cloth.

2.Avoid the use of all chemicals household cleaners, abrasives, or cleaners that contain lemon, vinegar, or other acids that may damage the finish.

3.Excessive exposure to sunlight and extreme changes in temperature and moisture can damage wood furniture.

4. The sink is fragile, please pay attention to maintaining its appearance.

5.Do not place hot appliances, such as curling irons and hot hair dryers directly on the countertop. Wipe spills immediately.

Step 13

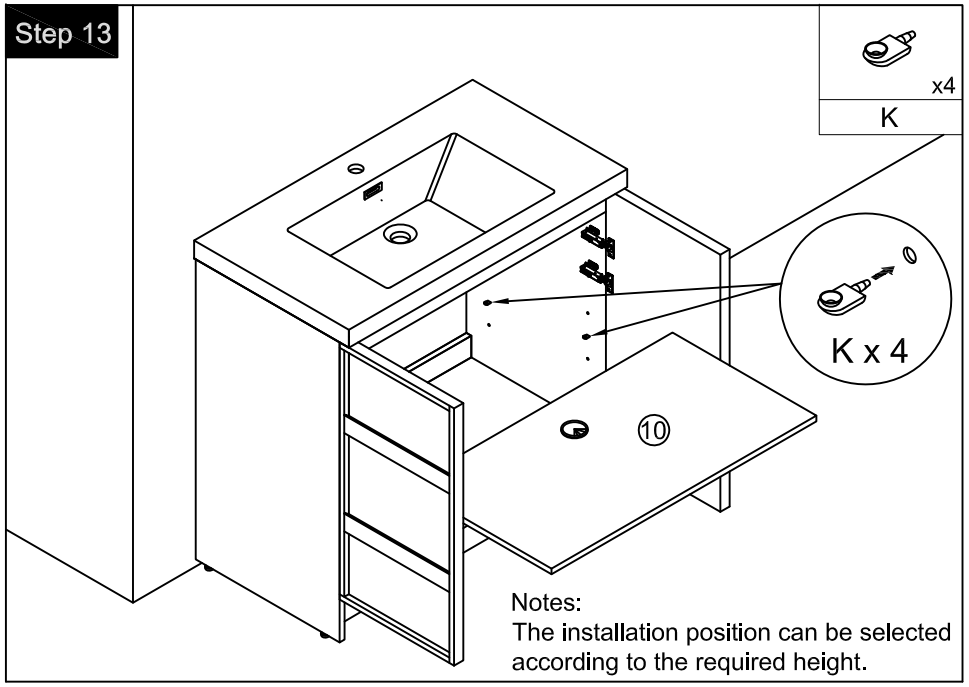

Notes:
The installation position can be selected according to the required height.

Finished

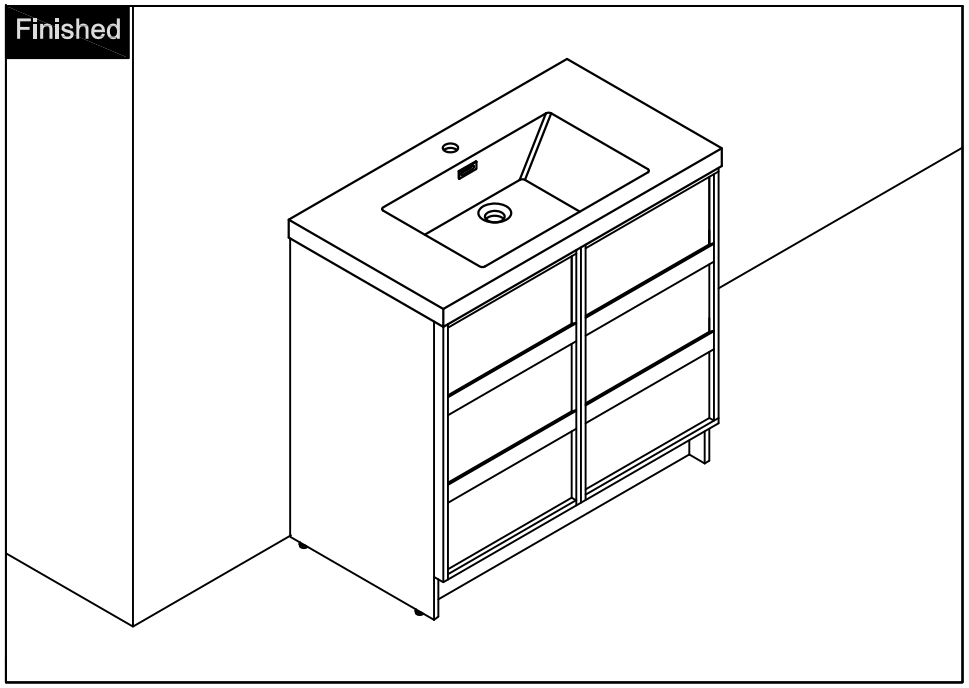

Dimensions

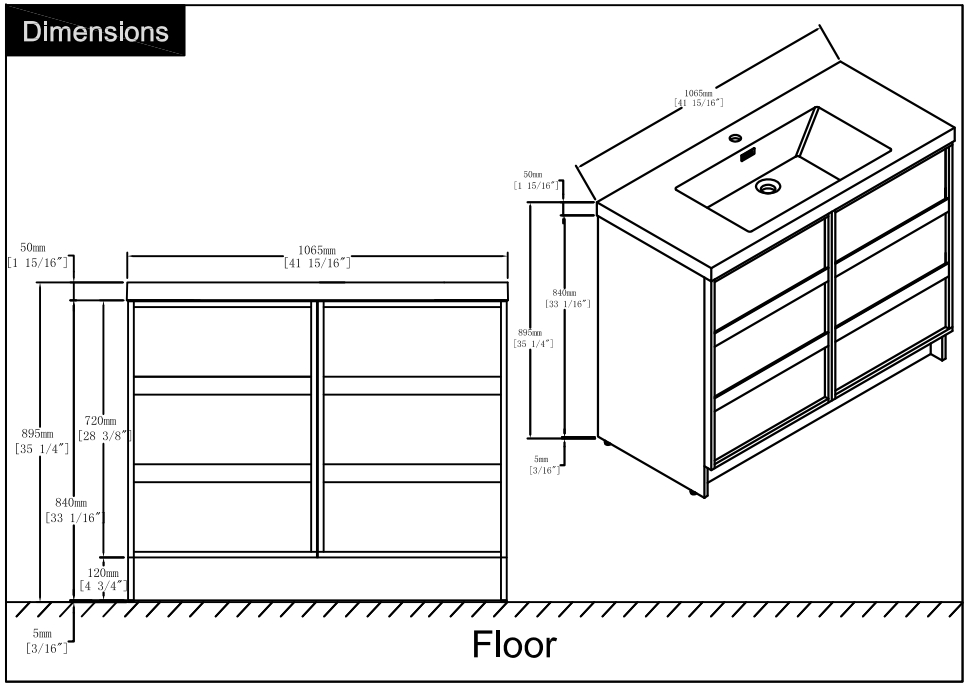

Components

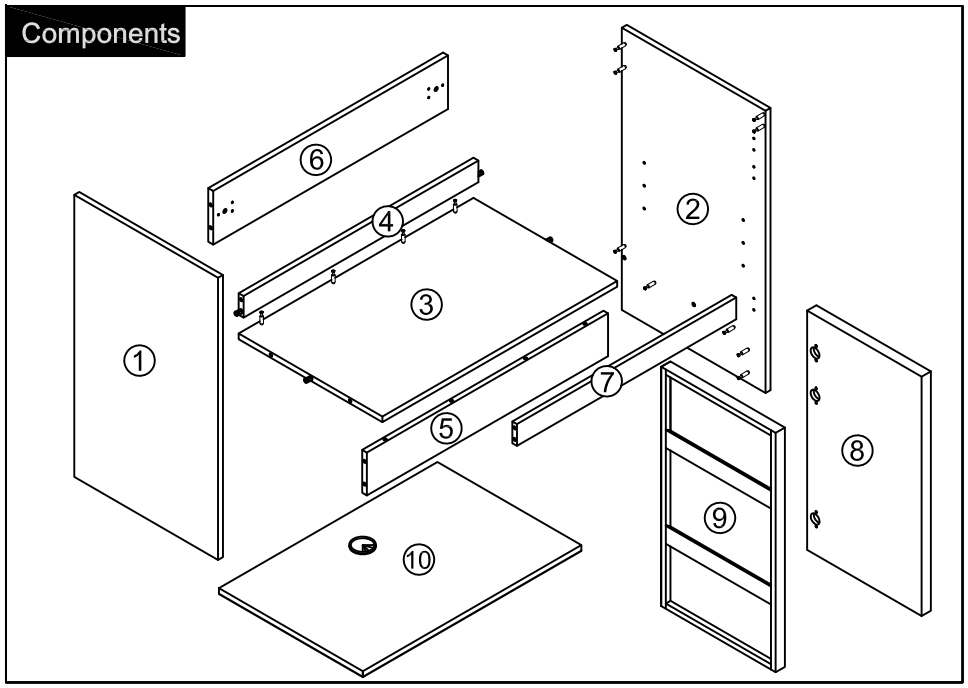

Step 1

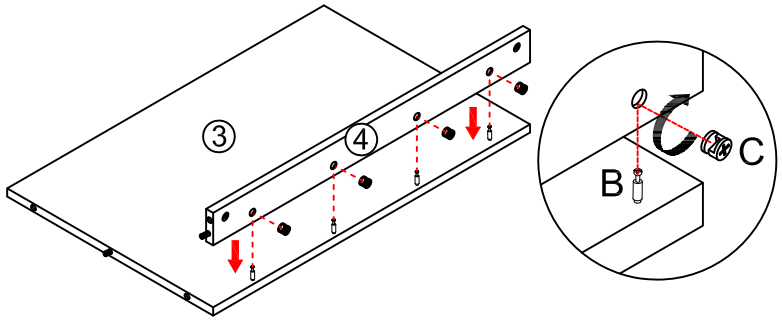

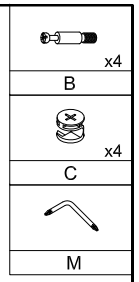

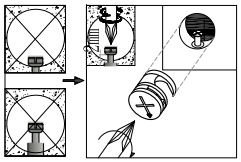

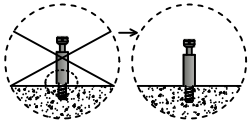

Notes: Screw installation depth as shown

Attention:Cam lock arrow point to the steel rod.

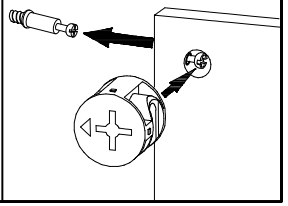

Step 2

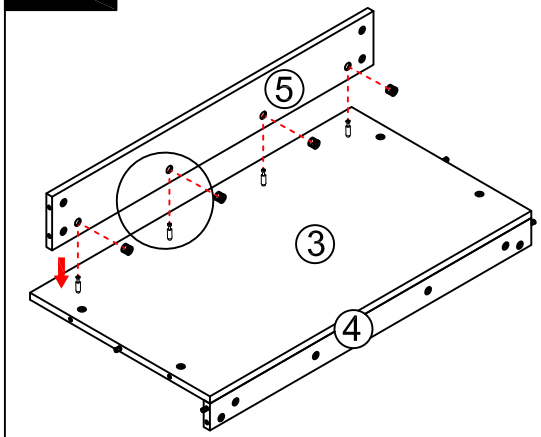

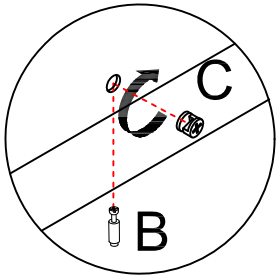

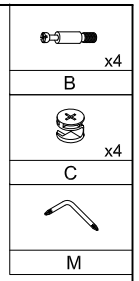

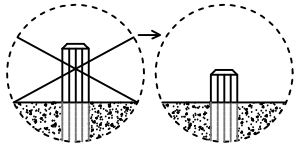

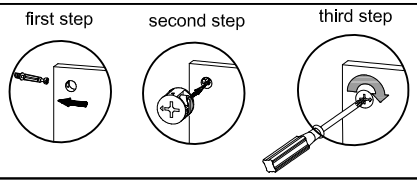

Step 11

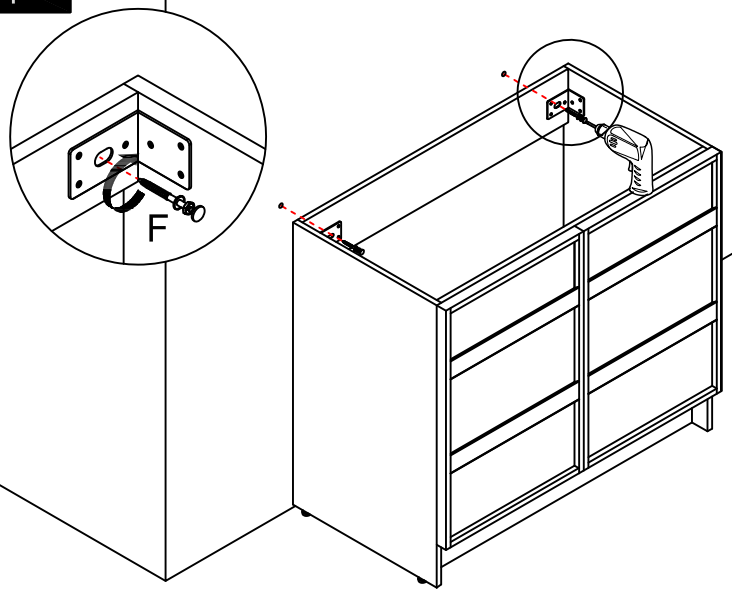

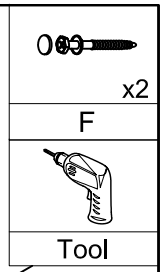

Step 12

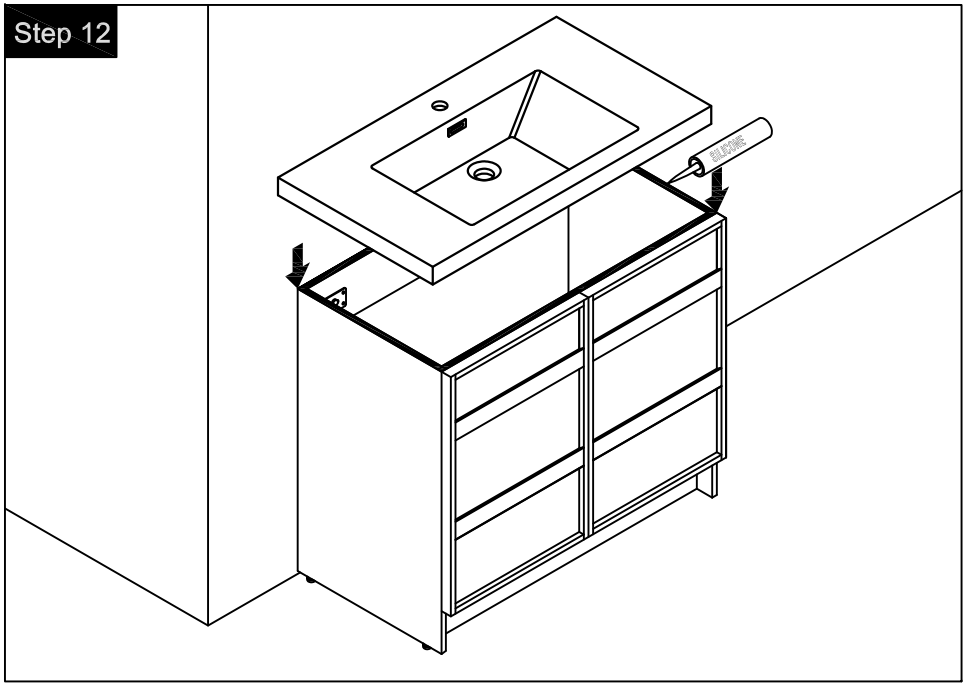

Step 9

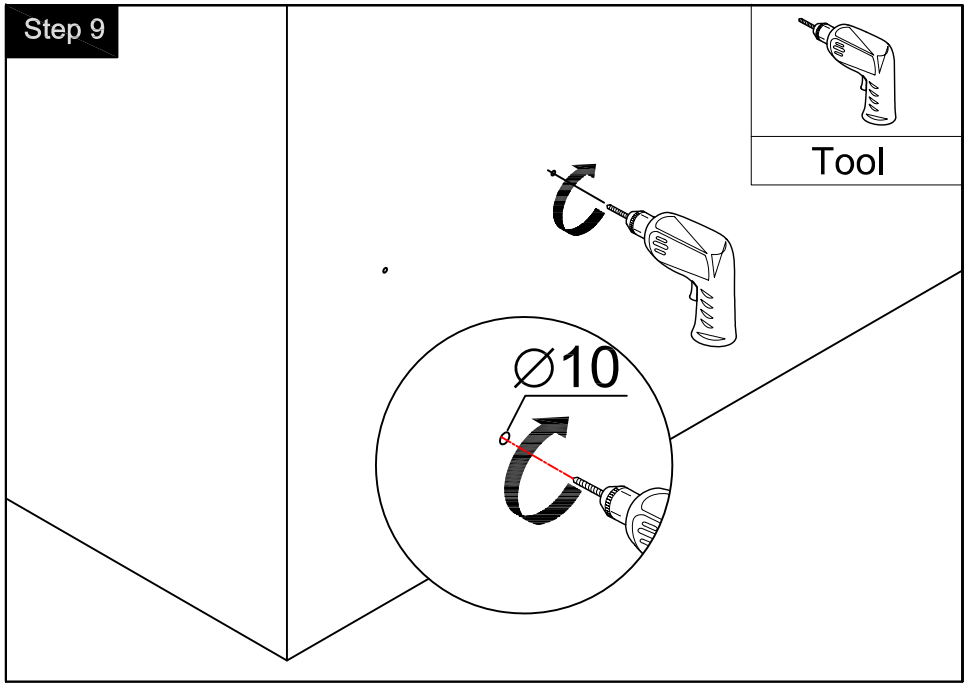

Step 10

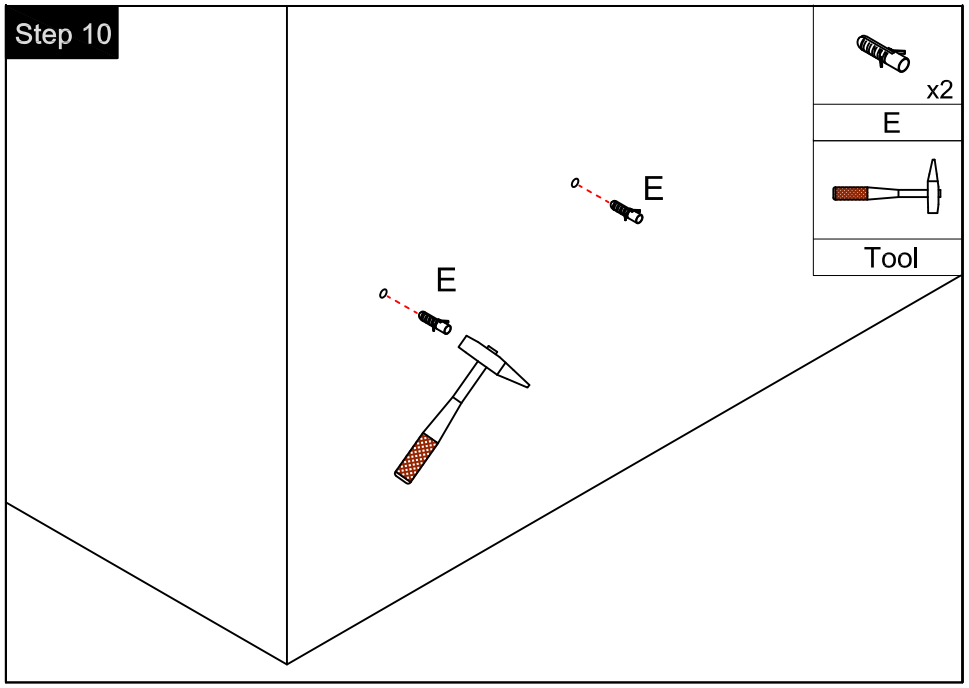

Step 3

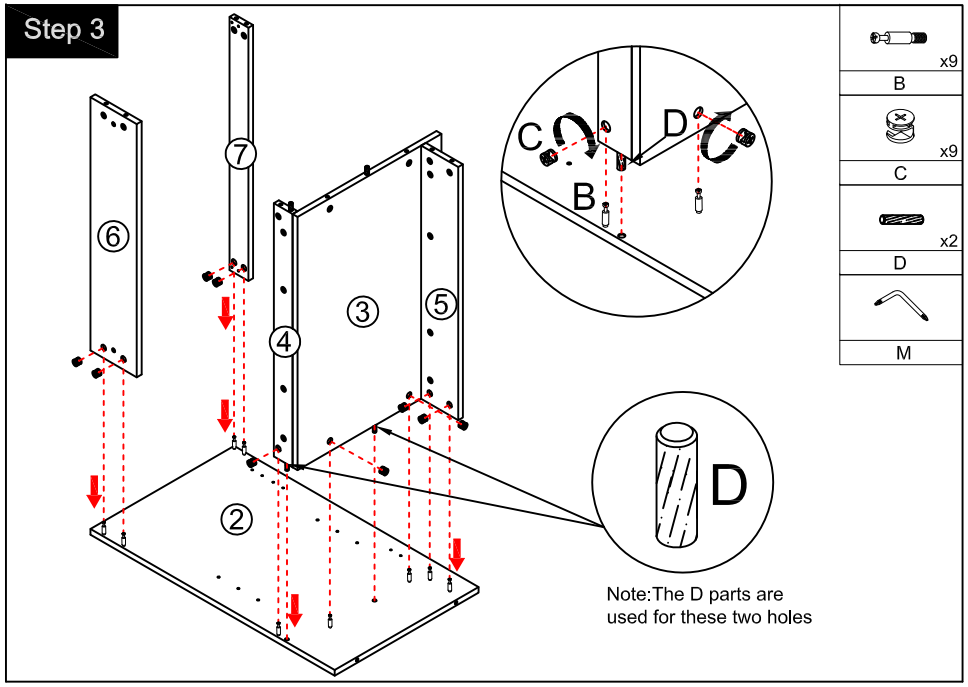

Step 4

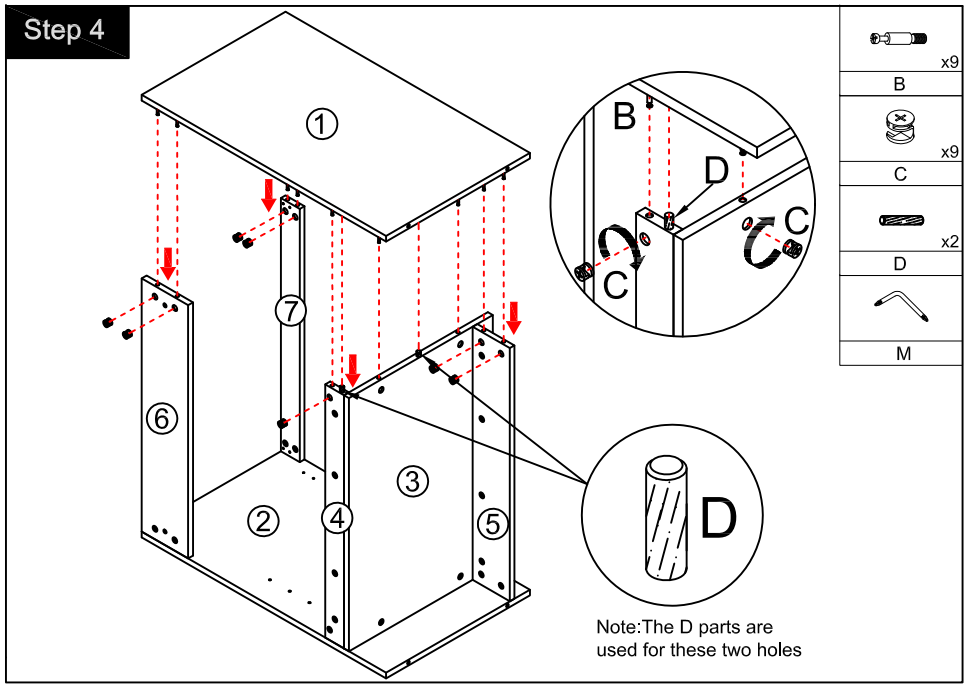

Step 5

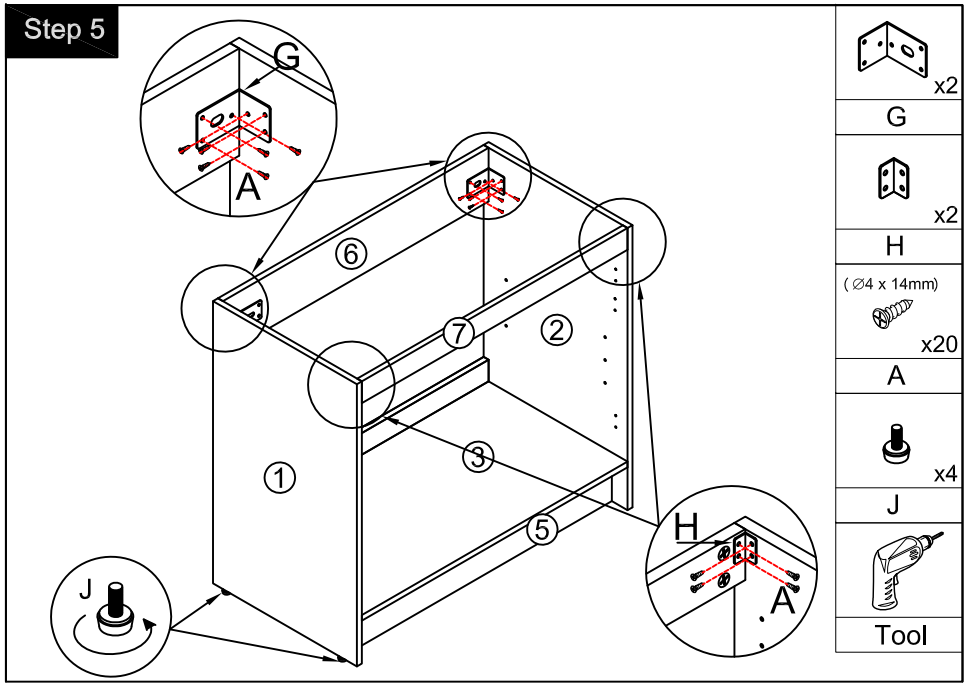

Step 6

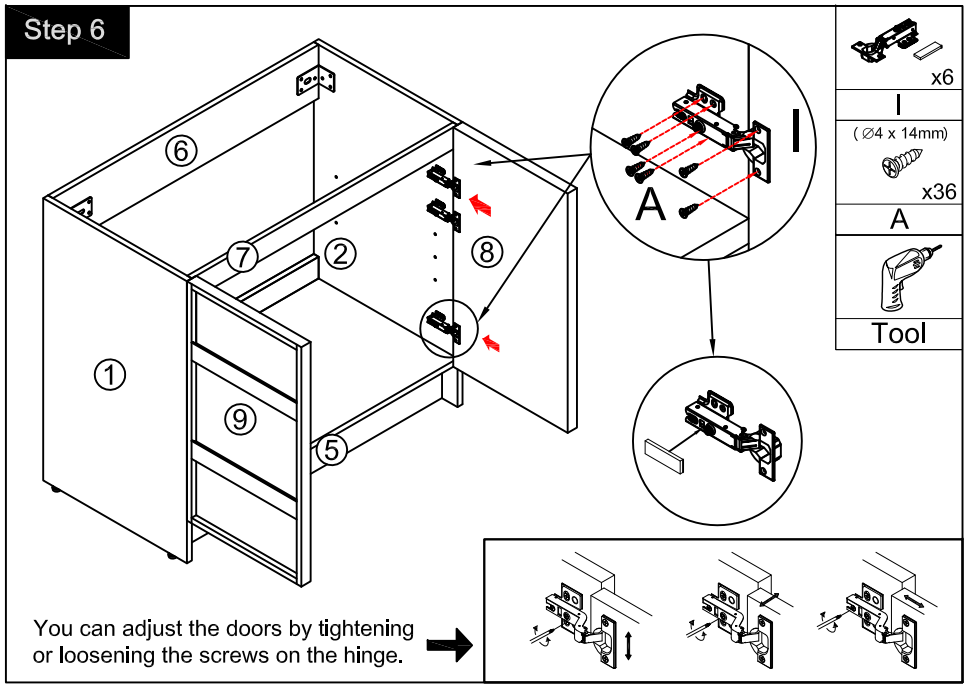

You can adjust the doors by tightening or loosening the screws on the hinge.

Step 7

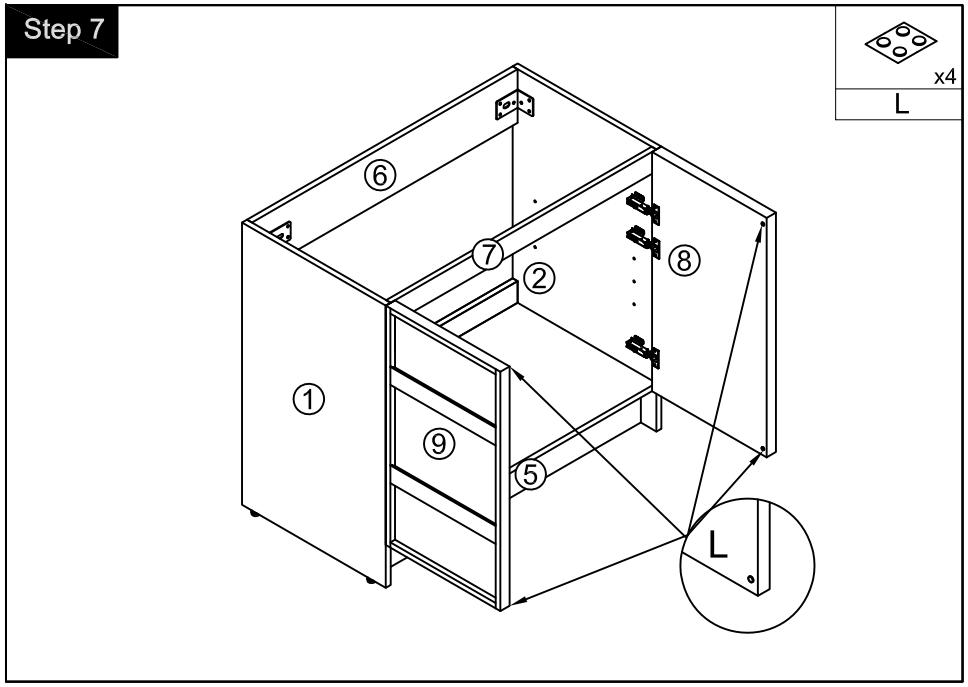
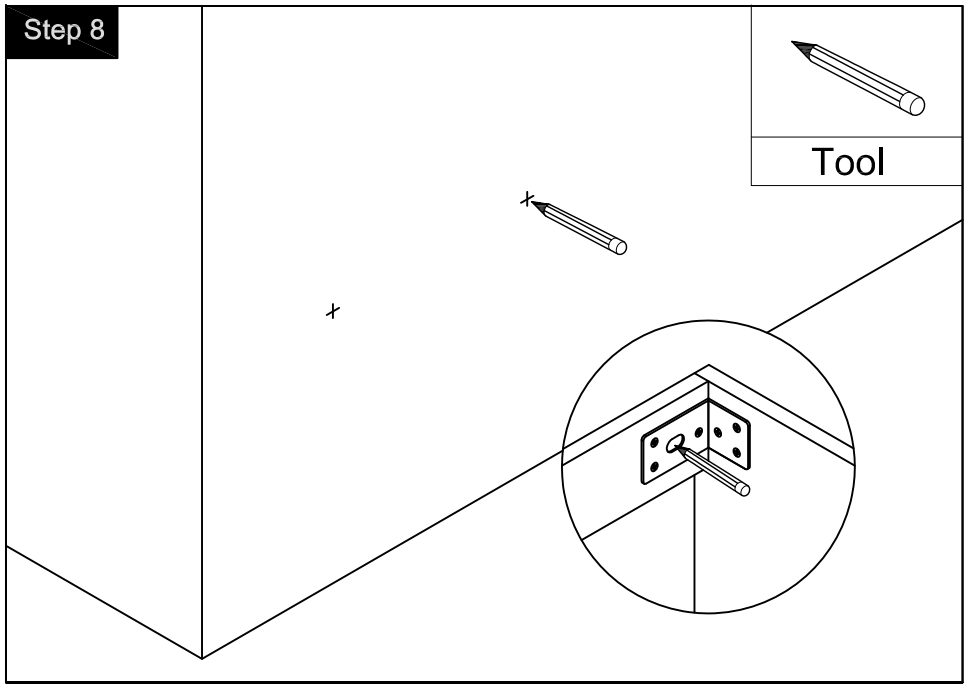
Step 8