Assembly Instructions

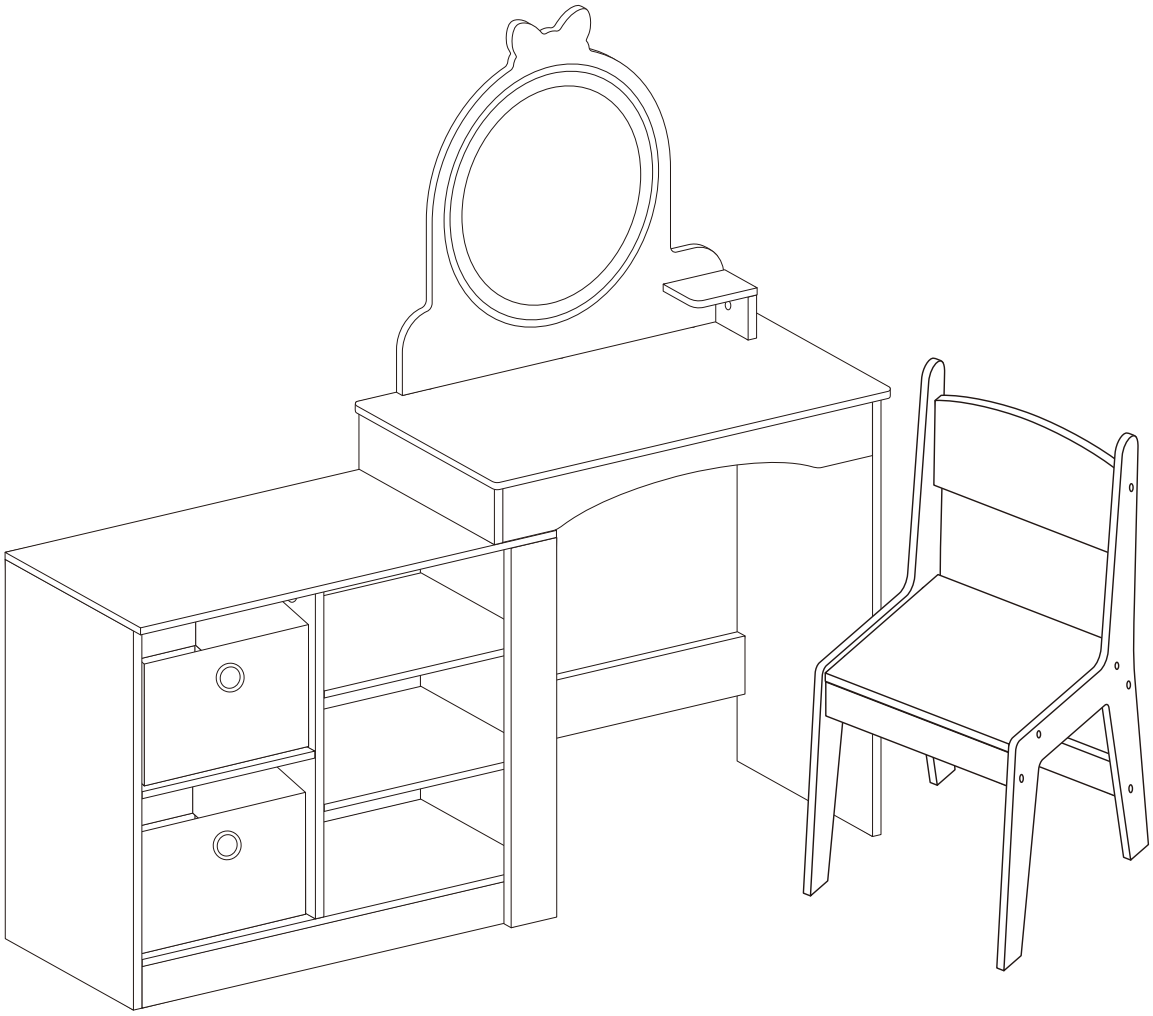

warning notice

- Open your item in the area you plan to keep it for less heavy lifting.

- Identify, sort, and count the parts before attempting assembly.

-Lay all parts on smooth flat surface.

-Make sure to always face the point on the top of the Cam Lock towards the outer edge.

-Do NOT use harsh chemicals or abrasive cleaners on this item.

- Never push, pull,or drag your furniture.

Teamwork

Failure to use 2 people for assembly could result in unit damage or personal injury.

Before You Start

Read through each step carefully and follow the proper order

Separate and count all your parts and hardware

Give yourself enough room for the assembly process

Have the following tools: Phillips Head Screwdriver and Hammer

Caution: lf using a power drill or power screwdriver for screwing, please be aware to slow down and stop when screw is tight. Failure to do so may result in stripping the screw.

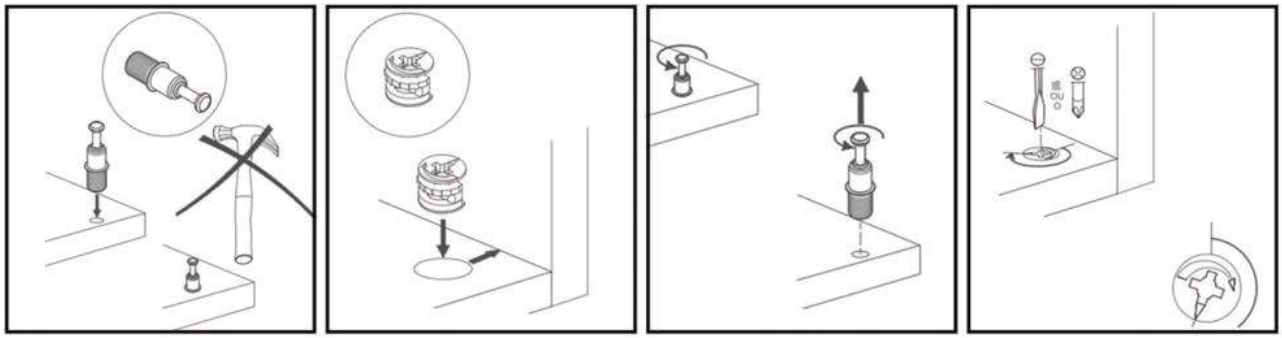

Components

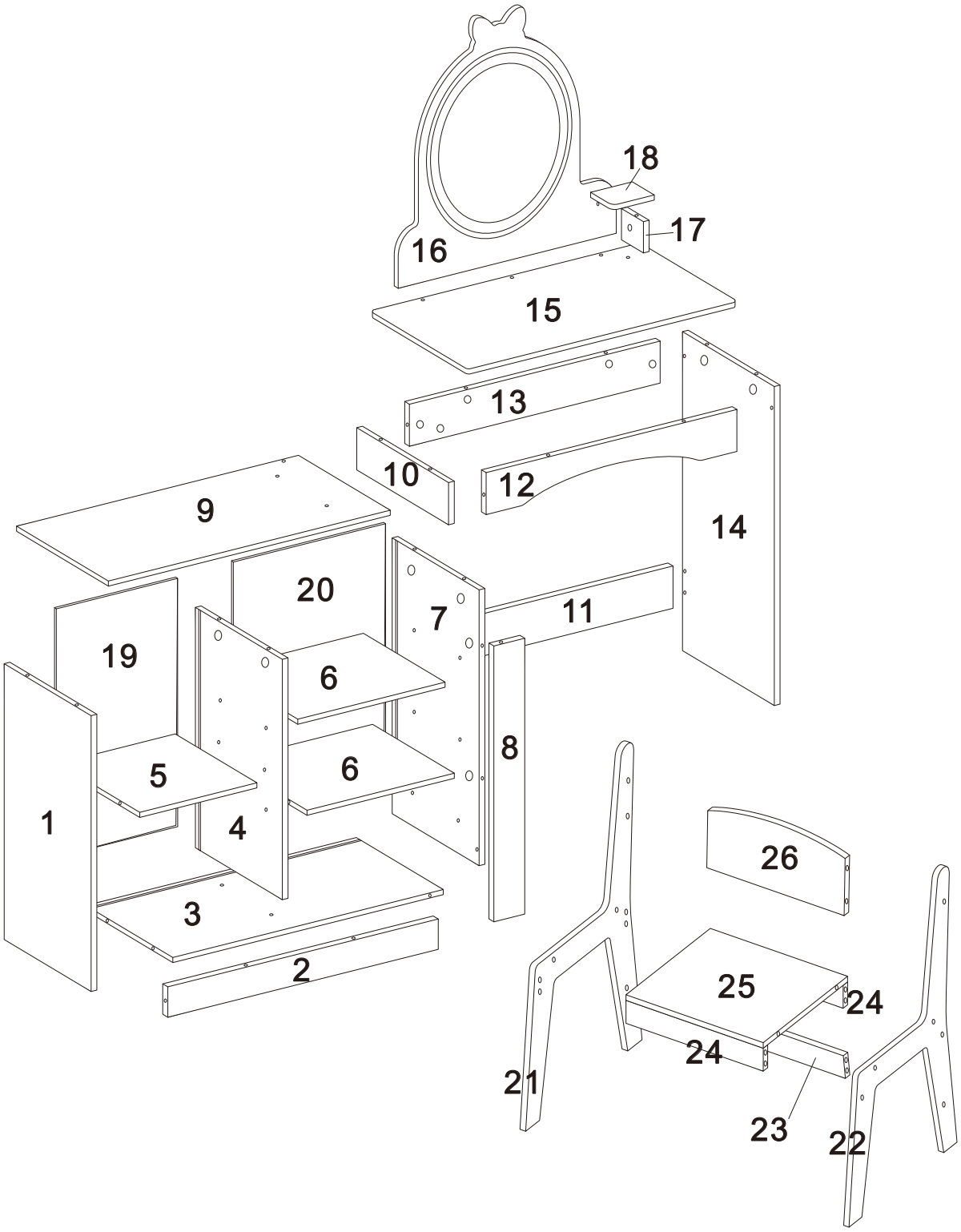

Components


1: 1pc

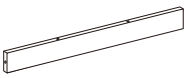
2: 1pc

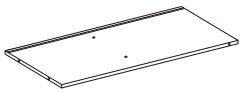
3:1pc

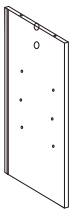
4: 1pc

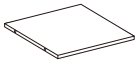
5: 1pc

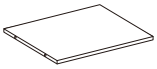
6: 2pcs

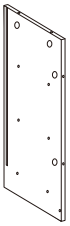
7: 1pc


8: 1pc

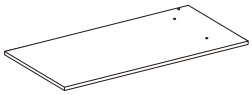
9: 1pc


10: 1pc


11: 1pc


12: 1pc

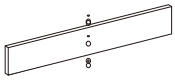
13: 1pc

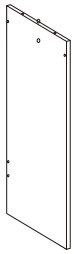
14: 1pc

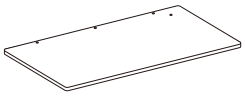
15: 1pc

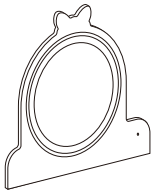
16: 1pc


17: 1pc


18: 1pc


19:1pc

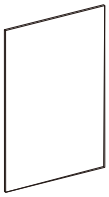
20: 1pc

Components

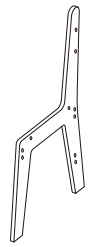

21: 1pc

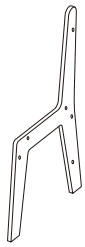

22: 1pc



23: 1pc



24: 2pcs

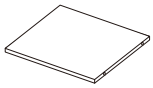

25: 1pc



26: 2pcs



∅5x40mm

A: 29pcs

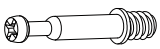

B: 40pcs



C: 40pcs



∅6x30mm

D: 8pcs

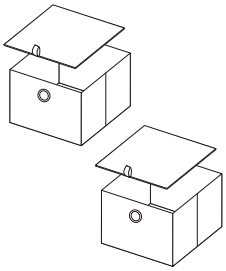

Assembly Instructions

1

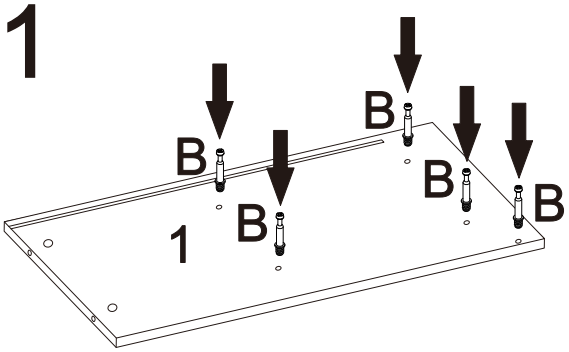

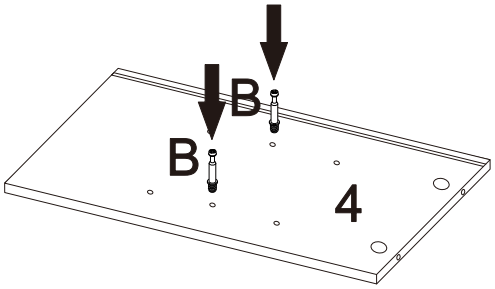

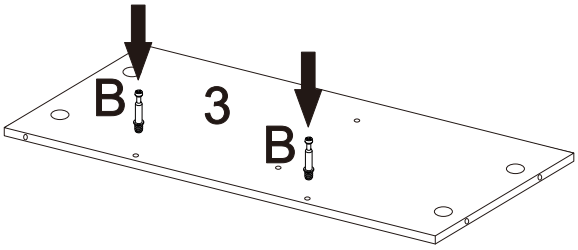

2

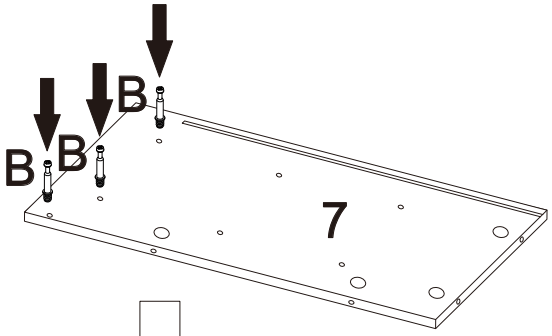

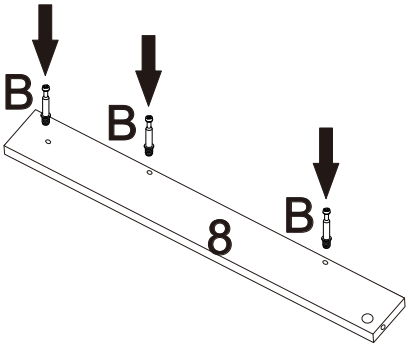

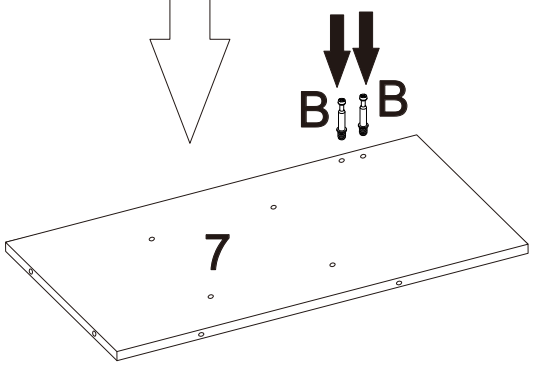

Assembly Instructions

3

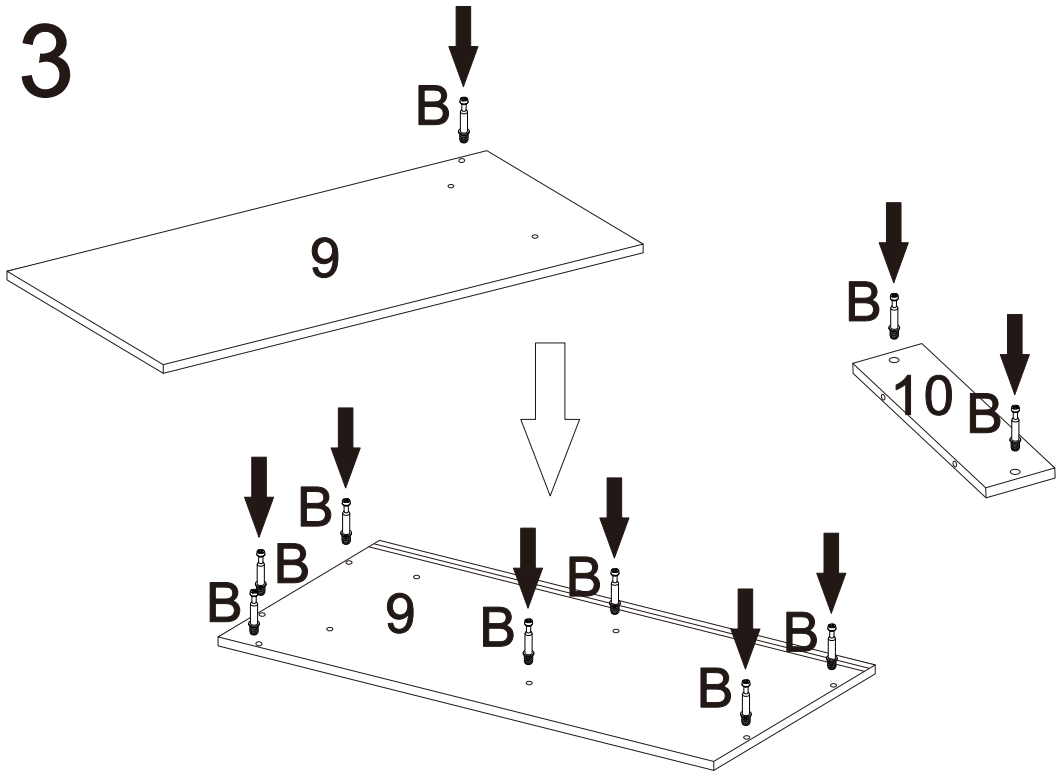

4

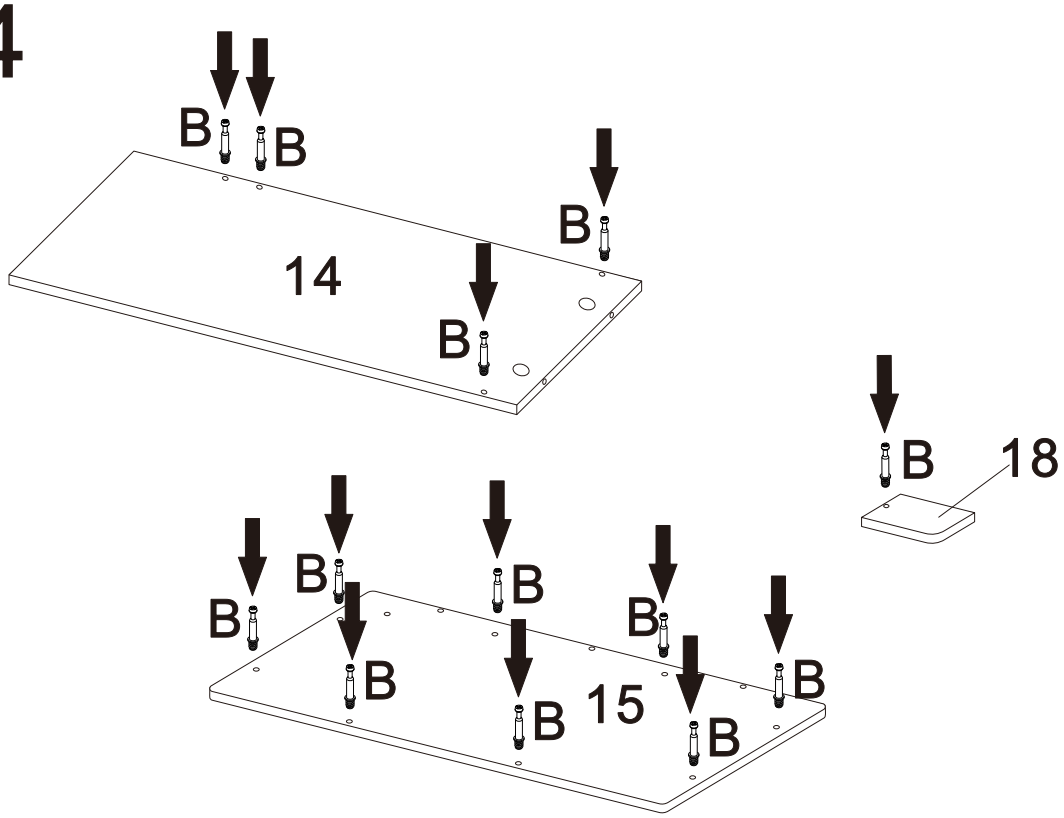

Assembly Instructions

5

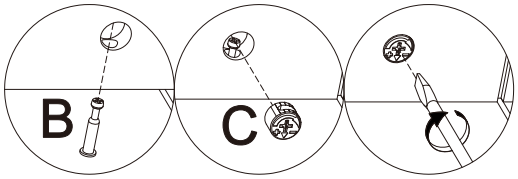

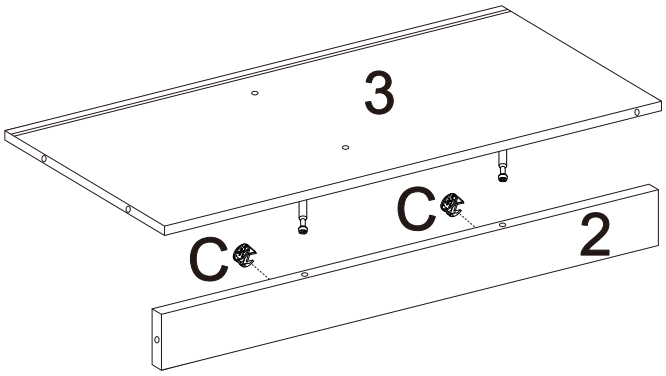

6

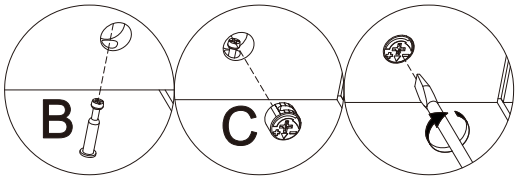

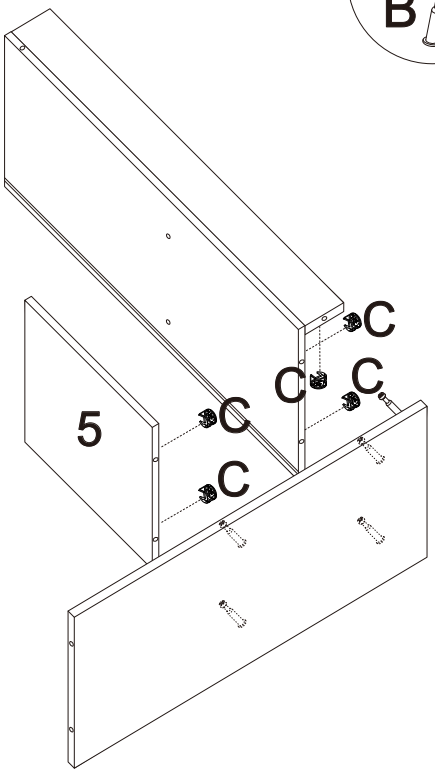

Assembly Instructions

7

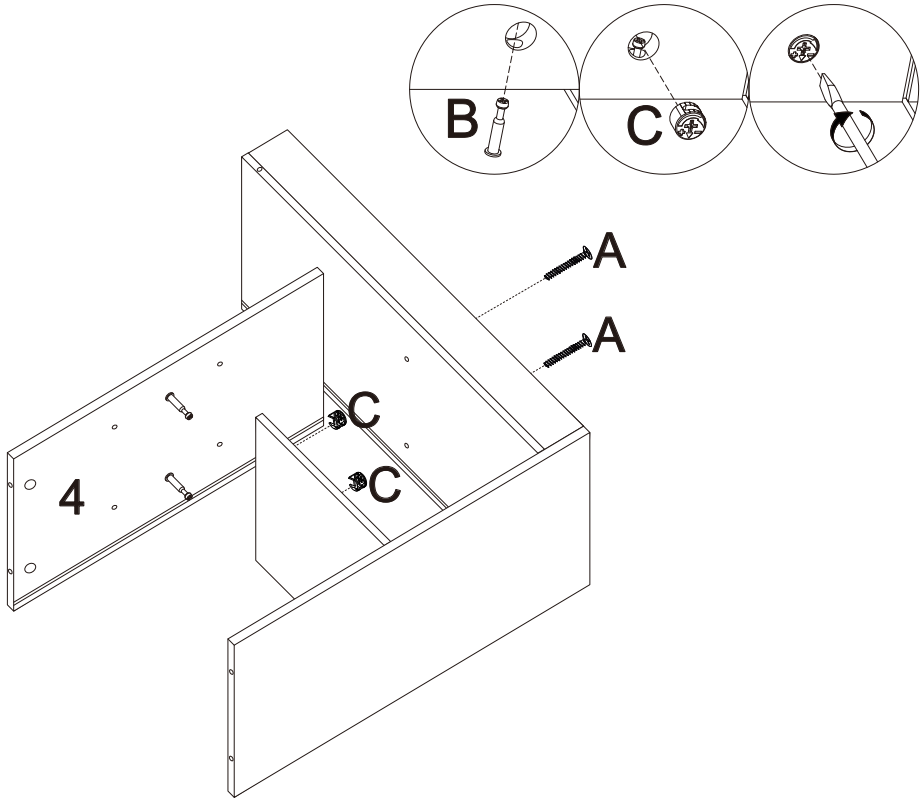

8

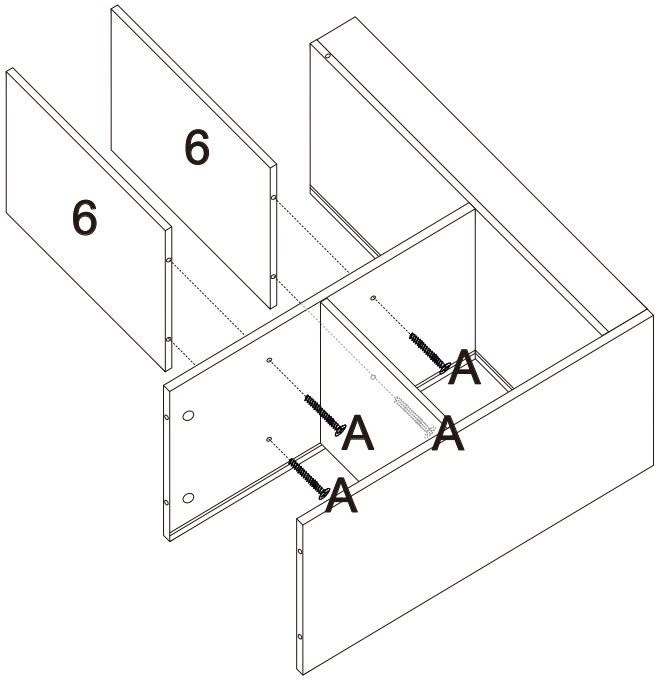

Assembly Instructions

9

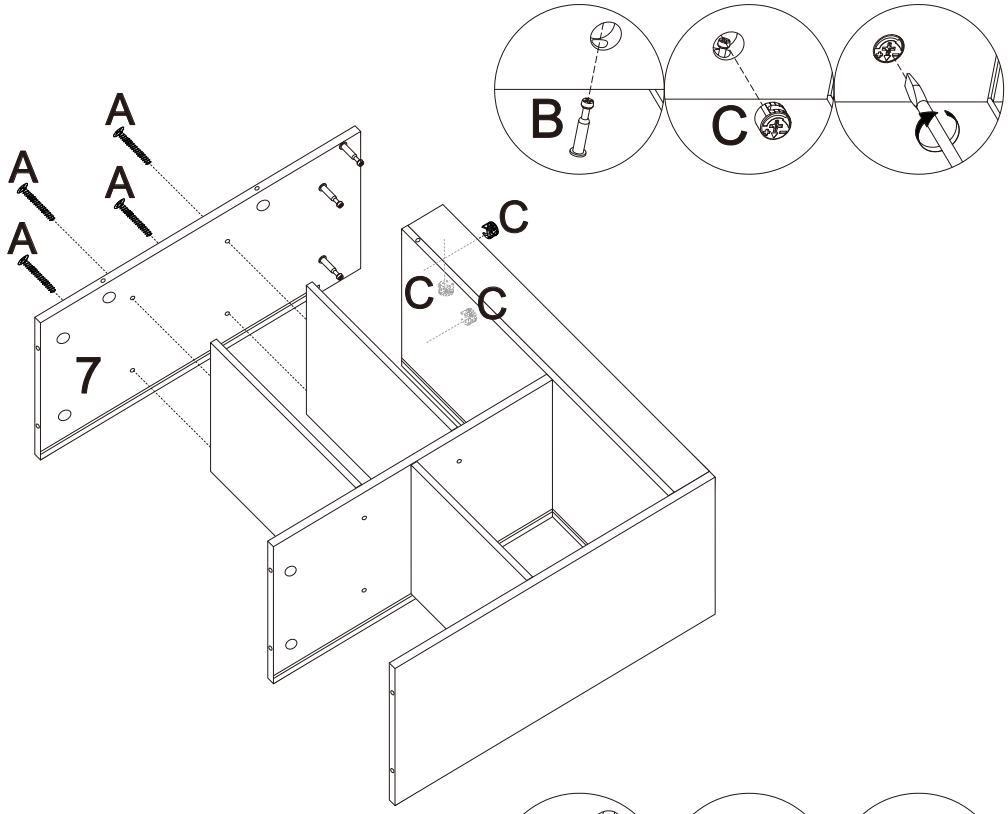

10

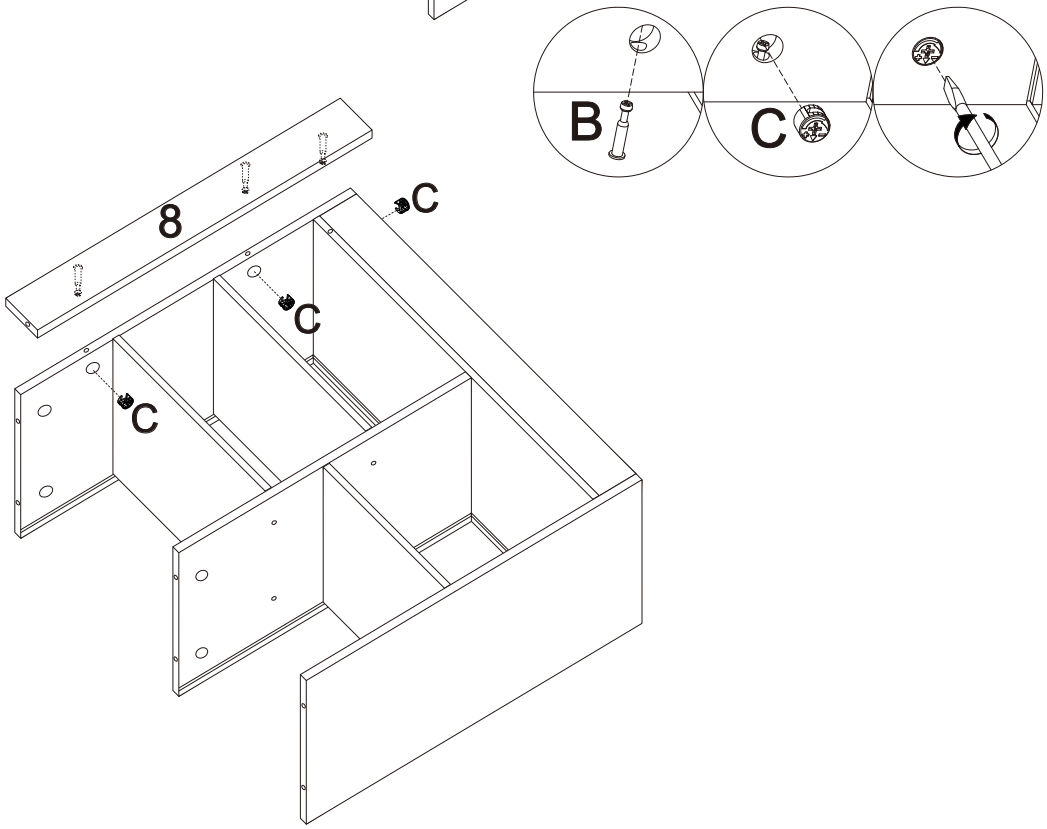

Assembly Instructions

11

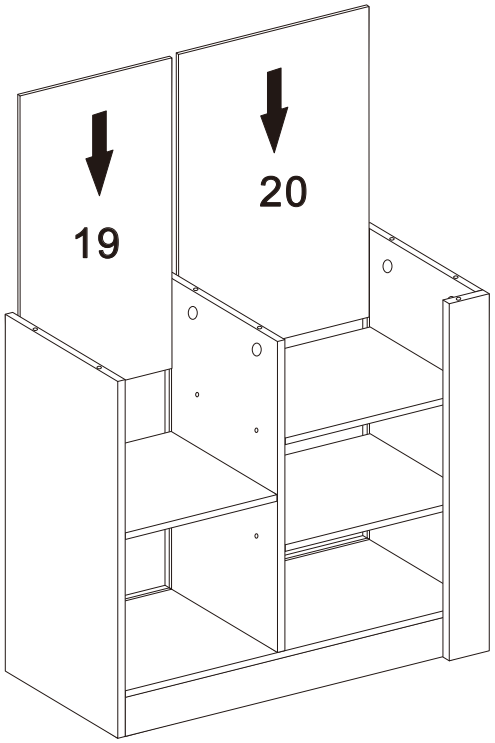

12

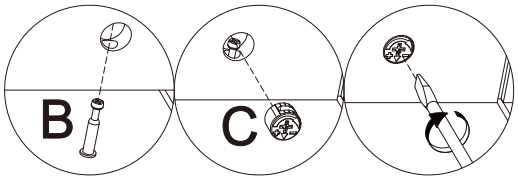

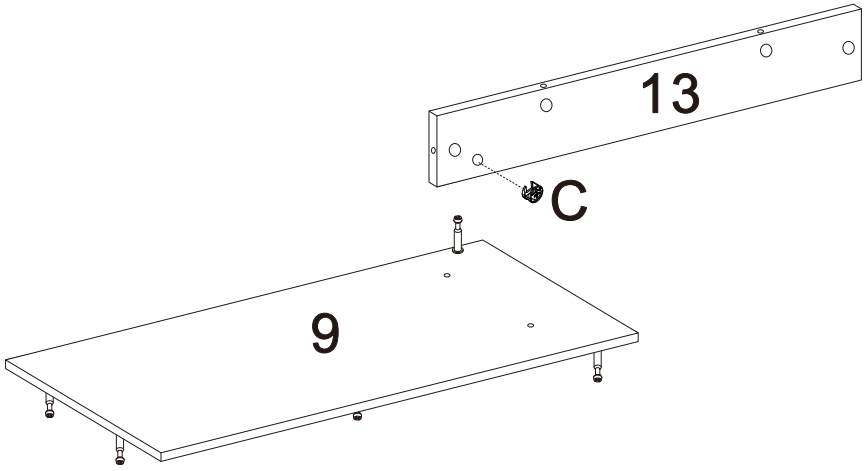

Assembly Instructions

13

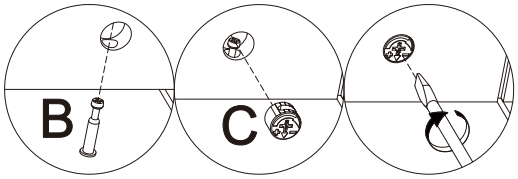

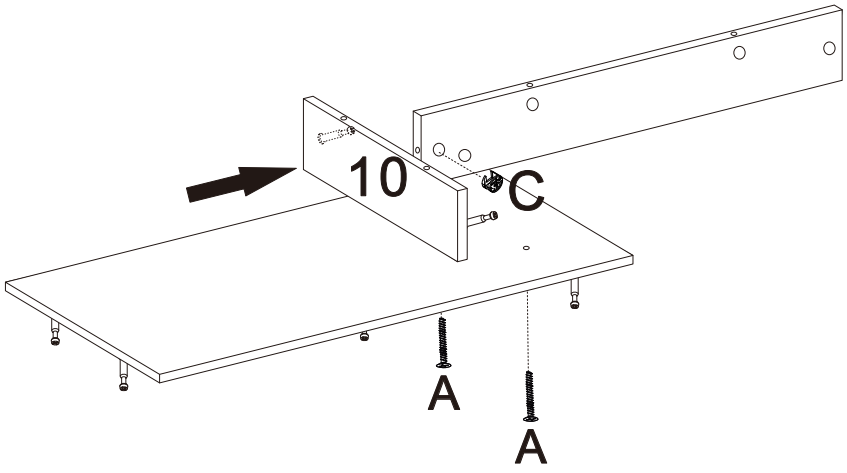

14

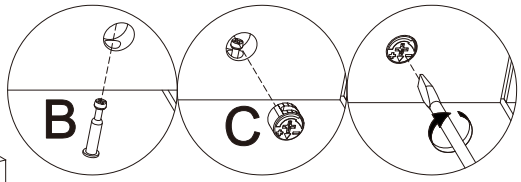

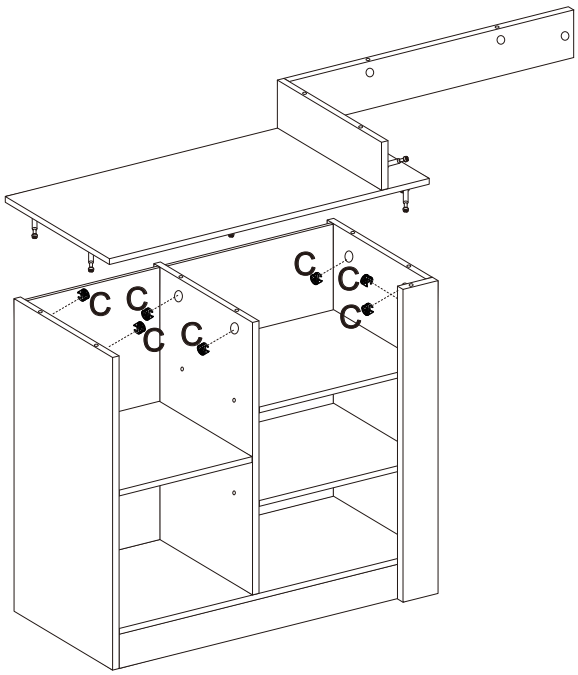

Assembly Instructions

15

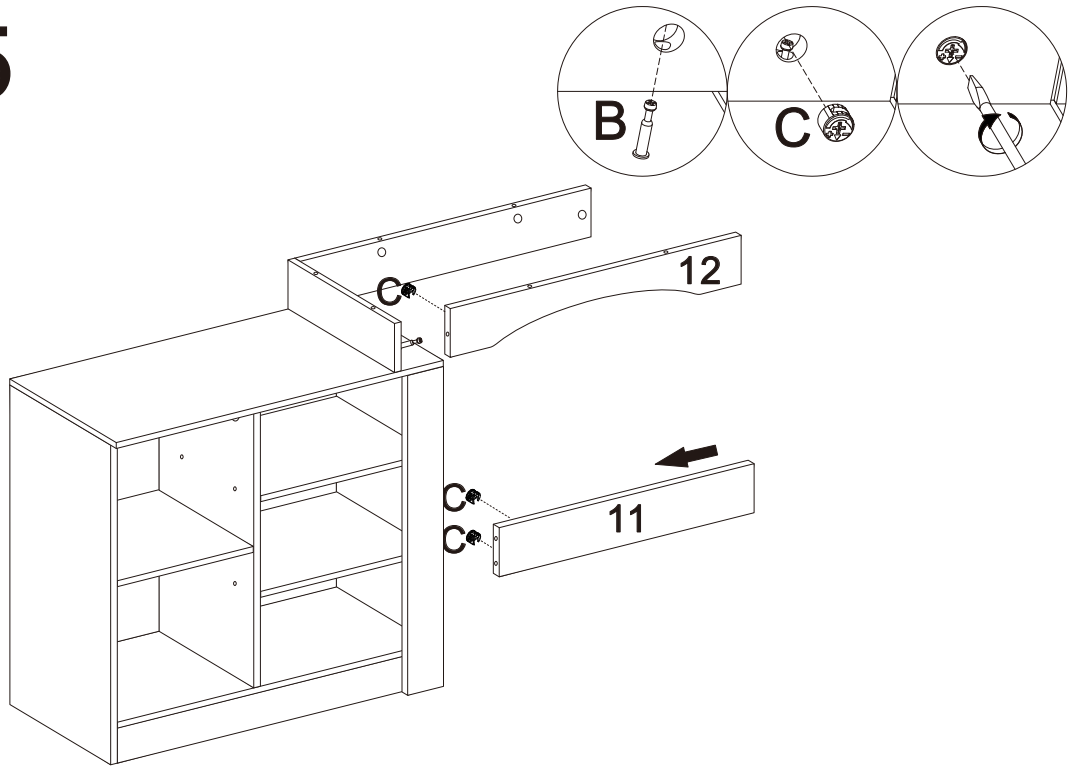

16

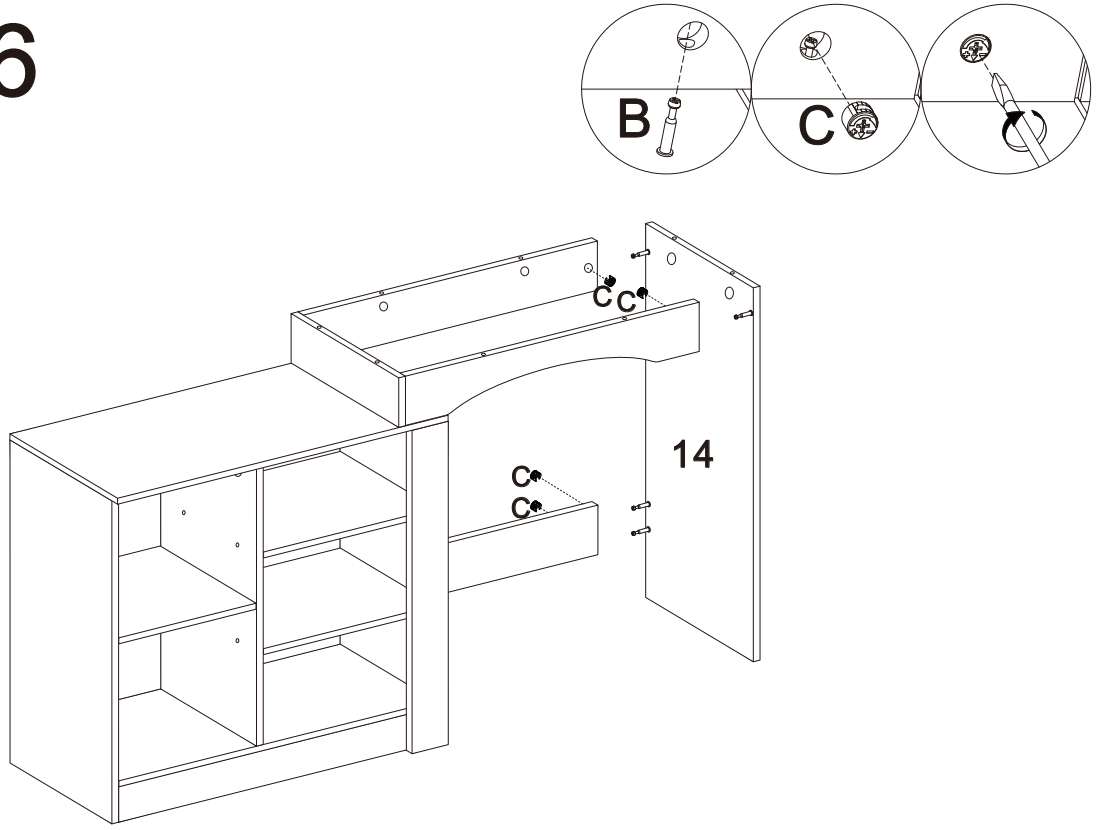

Assembly Instructions

17

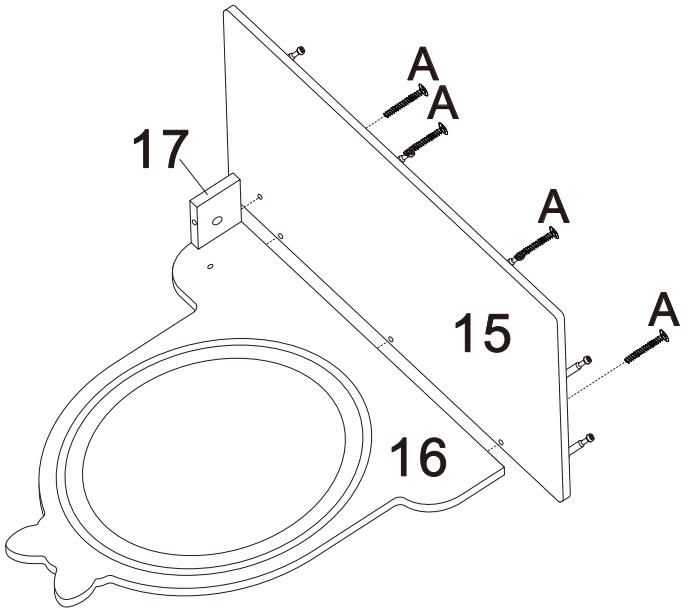

18

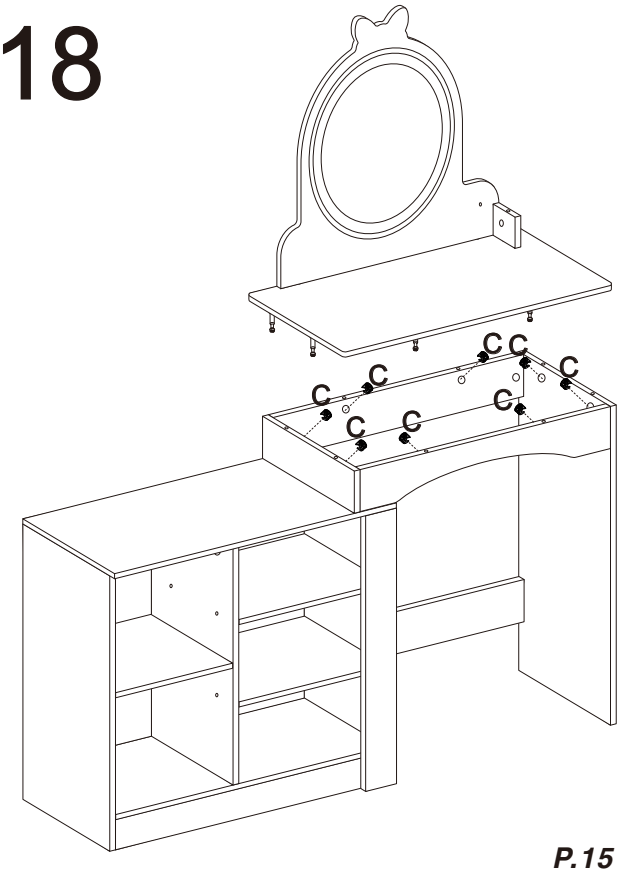

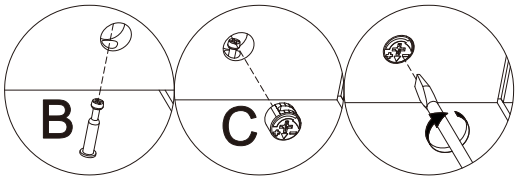

Assembly Instructions

19

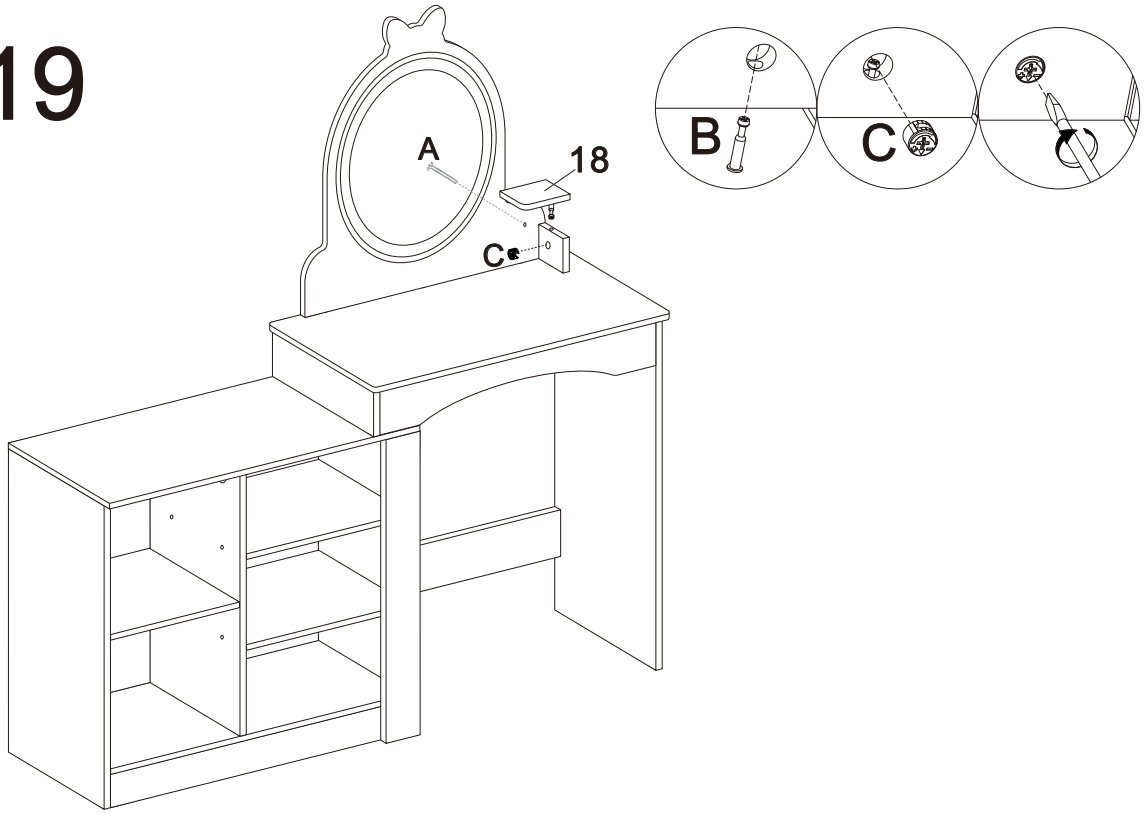

20

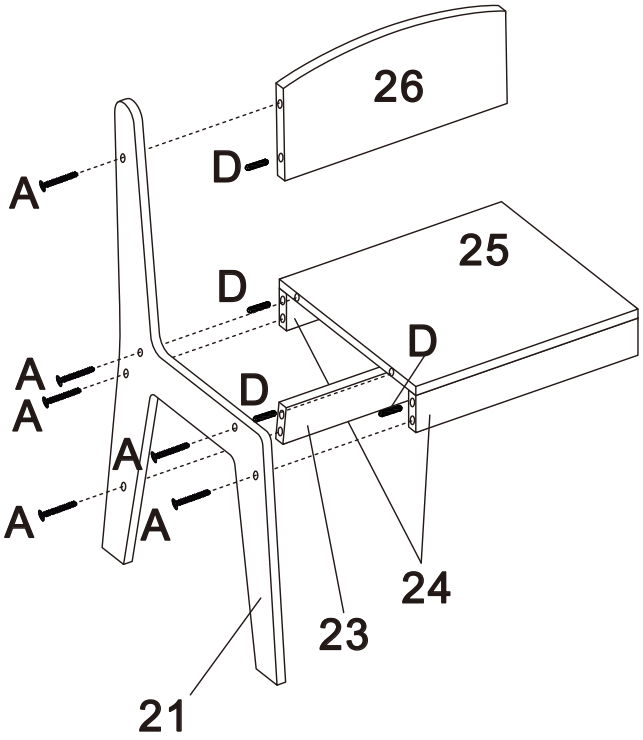

Assembly Instructions

21

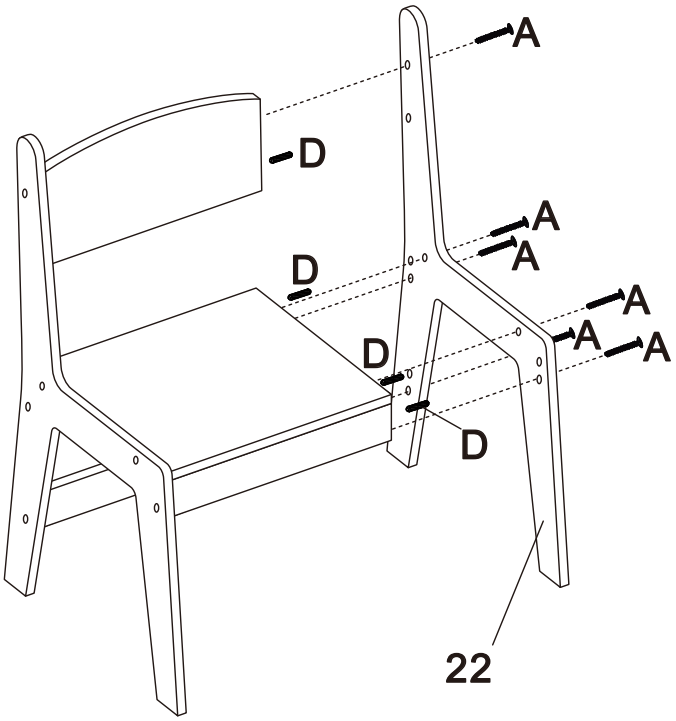

22

