INSTALLATION INSTRUCTIONS

PARTS LIST

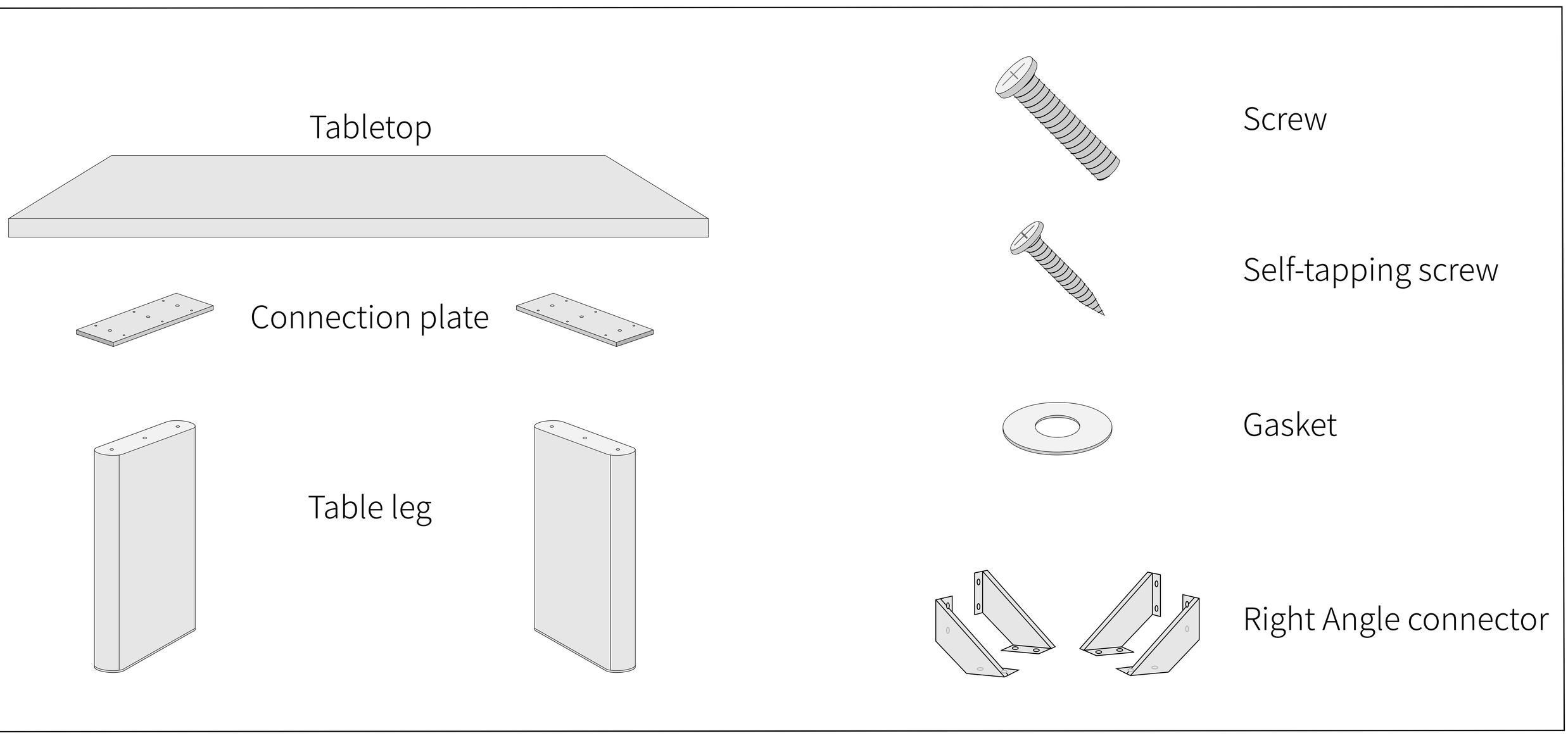

STEP 1

Install the connecting plate on the table legs using screws.

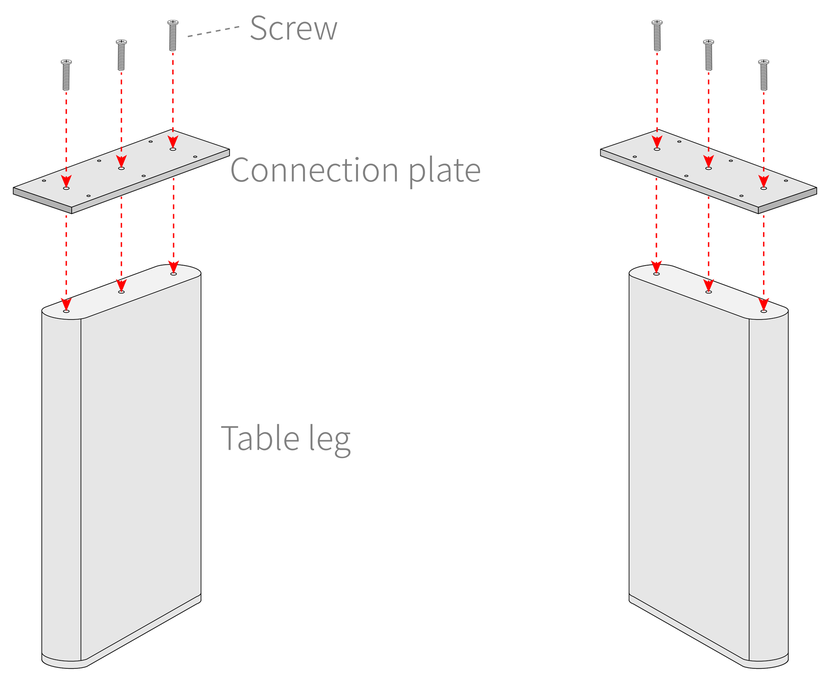

STEP 2

Install the table legs on the back of the table using self-tapping screws.

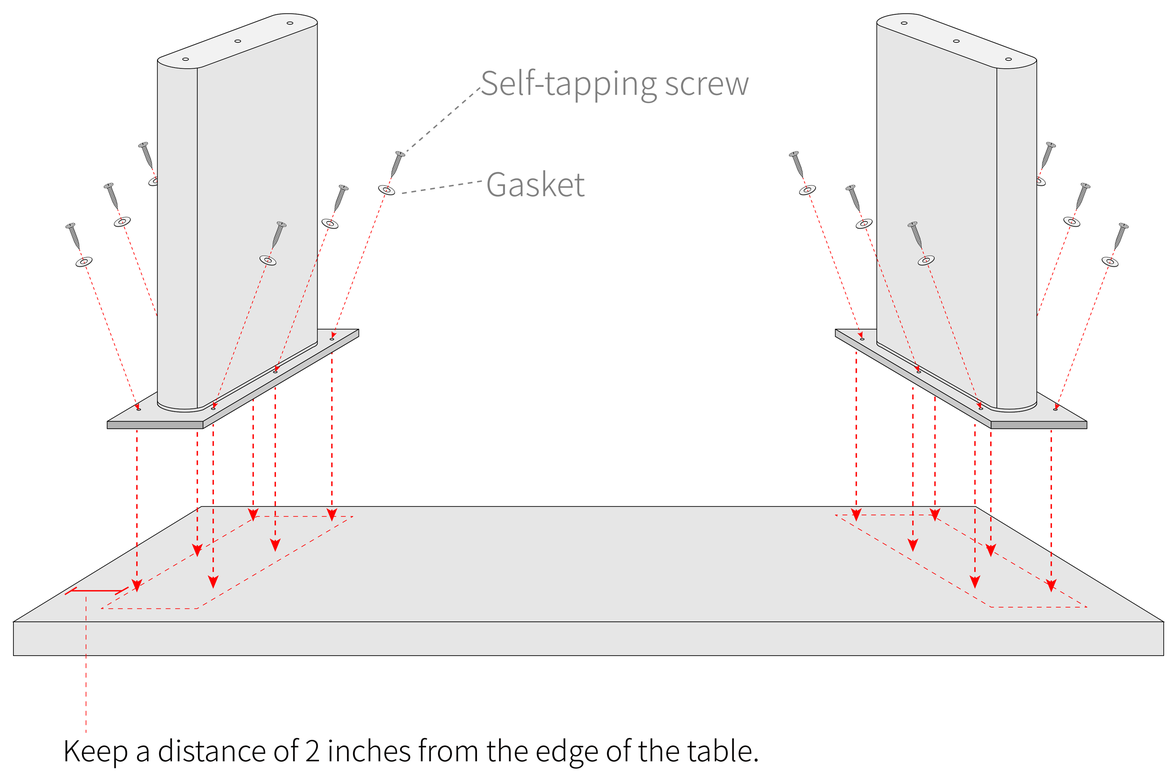

STEP 3

Install several right-angle connectors between the table legs and the tabletop.

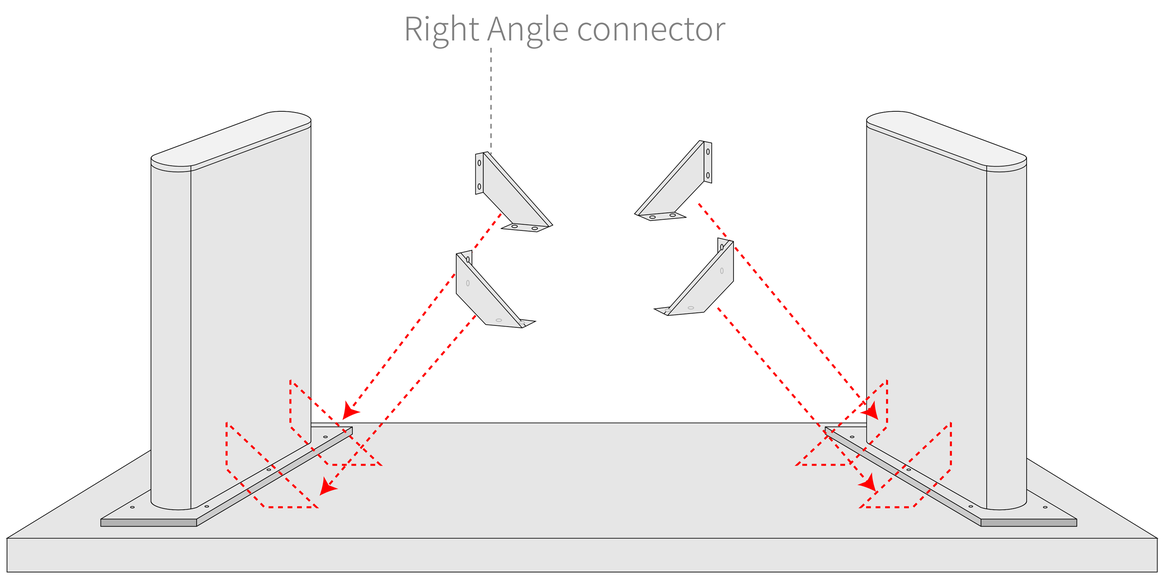

STEP 4

Fix the right-angle connector using self-tapping screws and washers.

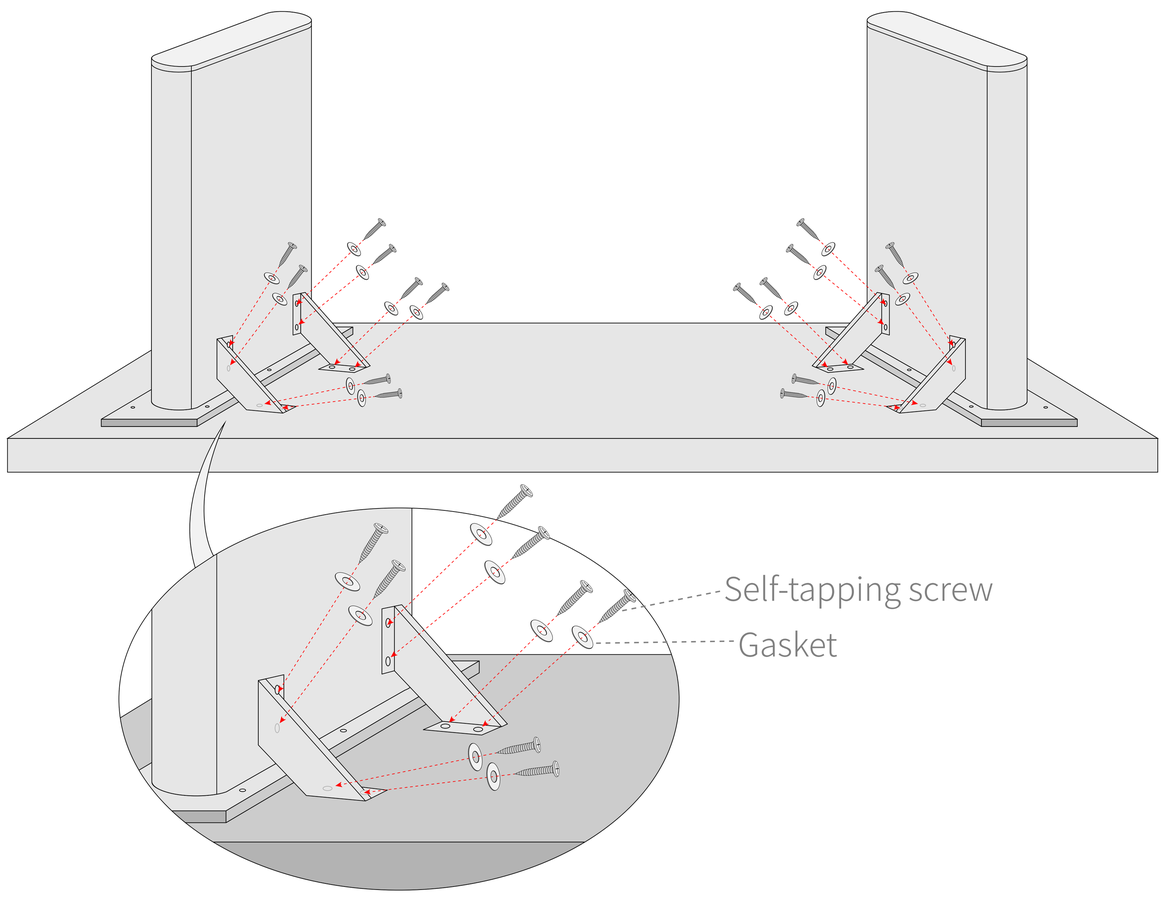

installation complete