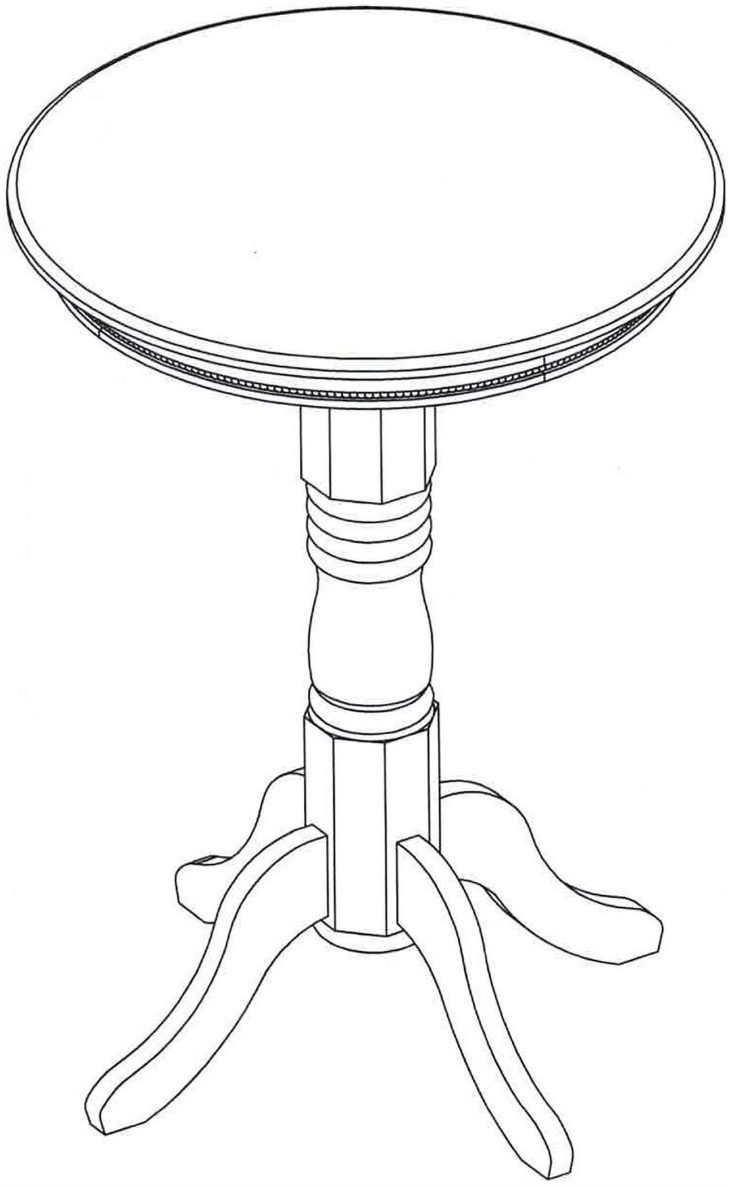

Phillips Screwdriver (Not provided)





4 PCS 4 PCS 4 PCS 4 PCS 8 PCS 1 PC 1 PC

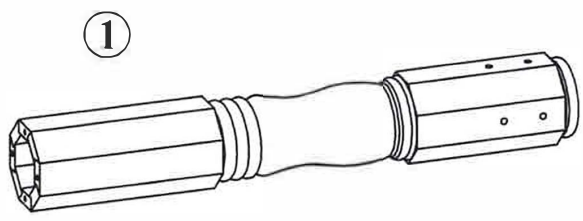

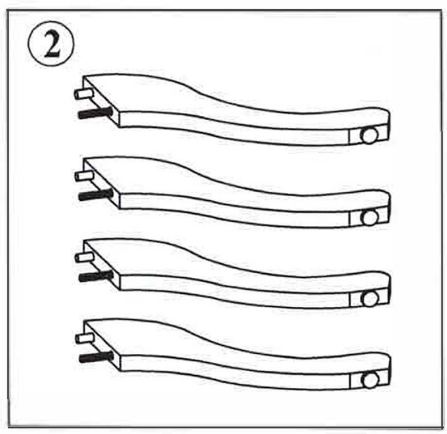



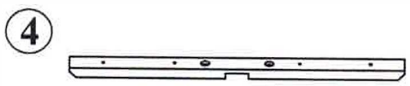

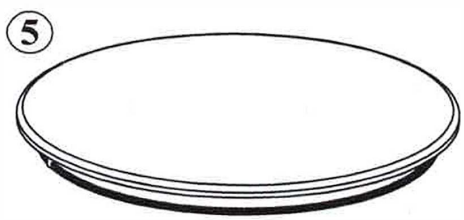

01

A	B	C
4 PCS	4 PCS	4 PCS

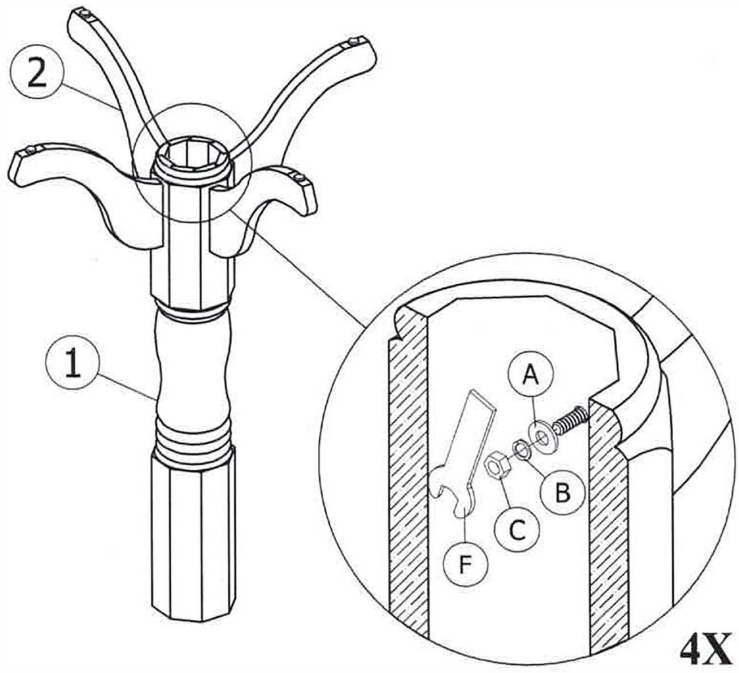

TIGHTEN HEX NUT COMPLETELY.

02

D
4 PCS

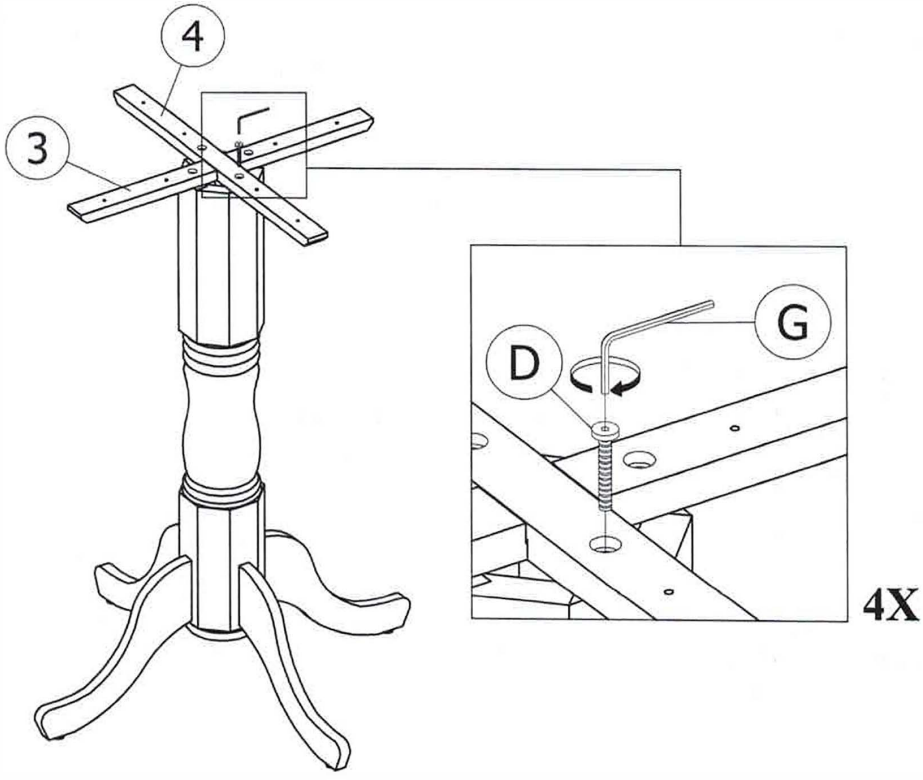

TIGHTEN BOLT COMPLETELY.

03

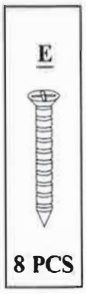

TIGHTEN SCREW COMPLETELY.

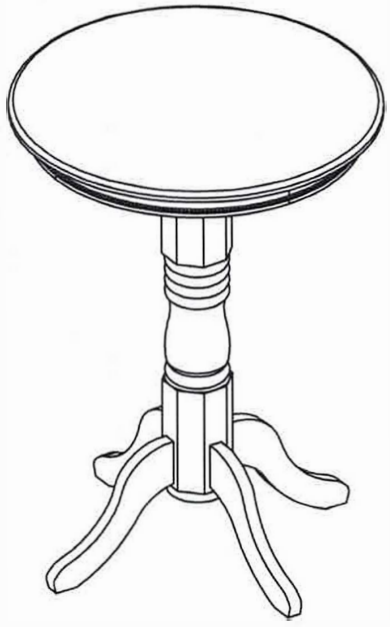

BE SURE TO CHECK ALL BOLTS ARE SECURELY TIGHTENED PRIOR USING THIS TABLE