ASSEMBLY INSTRUCTIONS
36 INCH BATH VANITY-CABINET

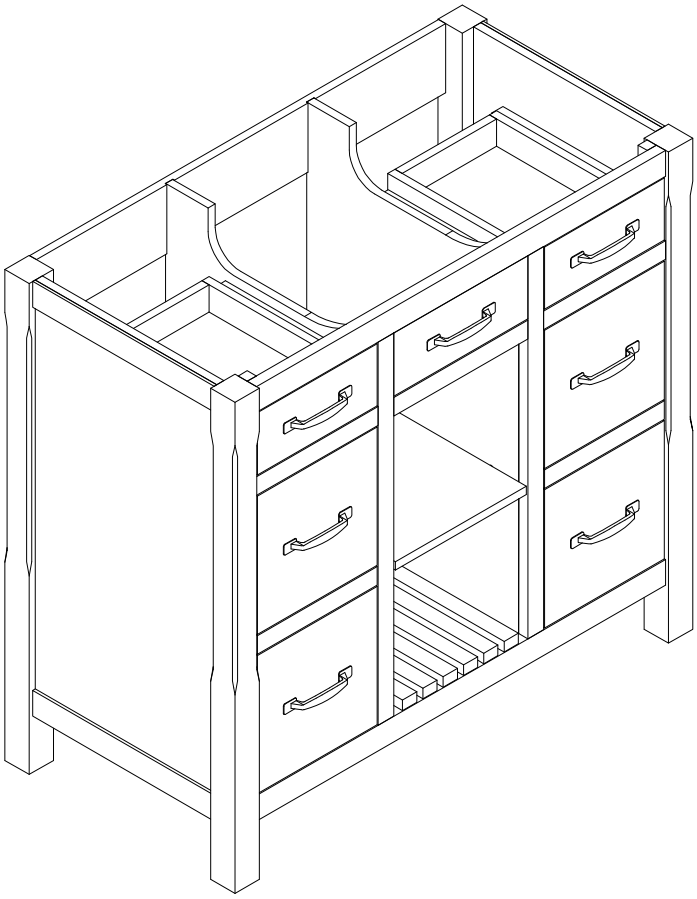

Thank you for purchasing this quality product. Be sure to check all packing material carefully for small parts which may have come loose inside the carton during shipment. Separate, identify and count all parts and hardware. Compare with the parts list to be sure all parts are present.
"DO NOT TIGHTEN SCREWS UNTIL COMPLETELY ASSEMBLED"

*** Use of power tool to assemble this product will invalidate any claim and damage this product making unsafe !!!**
*** Please assemble on a clean soft surface to avoid damage.**

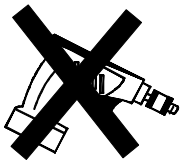

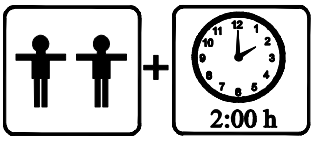

Tools Required

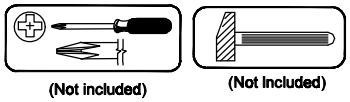

IMPORTANT:
PLEASE READ INSTRUCTION BEFORE STARTING THE ASSEMBLY

PLEASE DO NOT RETURN TO STORE

Please do not return this product to the retailer!!
We are able to assist you in ANY way

If you find that you have any trouble with assembly or missing or damaged parts please contact the seller.

Before Installation

Important – Please read these instructions fully before starting assembly

Thank you for purchasing this quality product. Be sure to check all packing materials carefully for small parts, which may have come loose inside the carton during shipment. Identify and count all items according to the PARTS LIST and/or HARDWARE LIST shown below. Check you have all the components and tools listed on the following pages.

- We recommend that you assemble this product with the assistance of another person; this will make the assembly easier, and will help eliminate damage to the product or injury to persons during assembly.
- Please do not over tighten screws or bolts until the assembly is completed.
- Keep children and animal away from the work area, small parts could choke if swallowed.
- Please put all parts on a non-abrasive floor before assembly,and follow the assembly steps to assemble your newly purchased product correctly and efficently.

Cam Lock Assembly Instructions

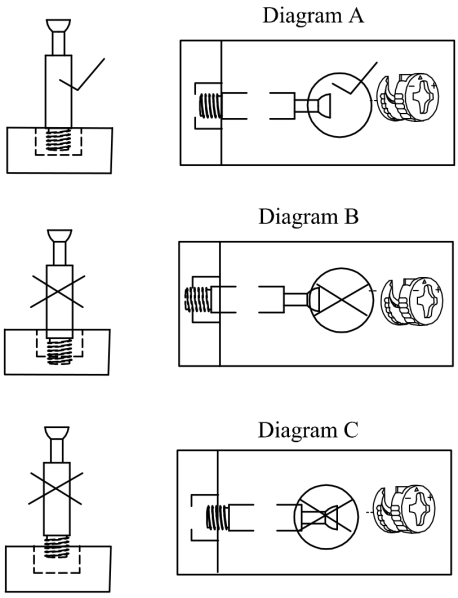

Insert Cam Bolt into hole as shown in diagram A.

Make sure not to insert the Cam Bolt:
Too deep as shown in figure B as this will cause the Cam Lock to be misaligned and unable to interlock properly.

Also avoid inserting the Cam Bolt too close to the surface of the hole as shown in figure C, as this will cause the Cam Lock to be too loose, and not interlock properly.

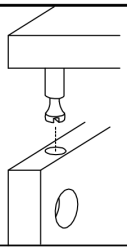

Connect the panels together.

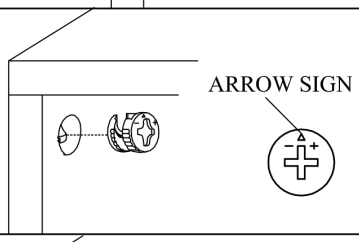

Insert the Cam Lock so the side opening fits over the head of the Cam Bolt.

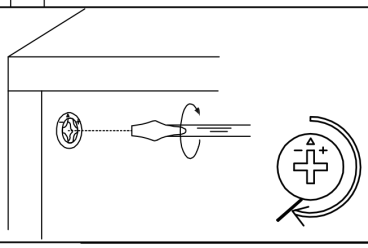

To tighten the Cam Lock, turn it clockwise on half a turn with a flat screwdriver.
**Do not use an automatic screwdriver as it may bend or break if too much power is imposed.*

Before installing the slide, separate the cabinet member and the drawer member.

Pay attention when connecting !
The sliding module must be at the front end.

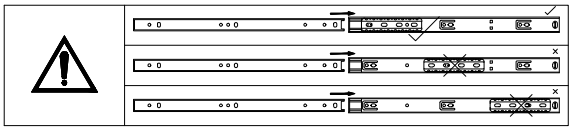

STEP 1 : Extend Slide

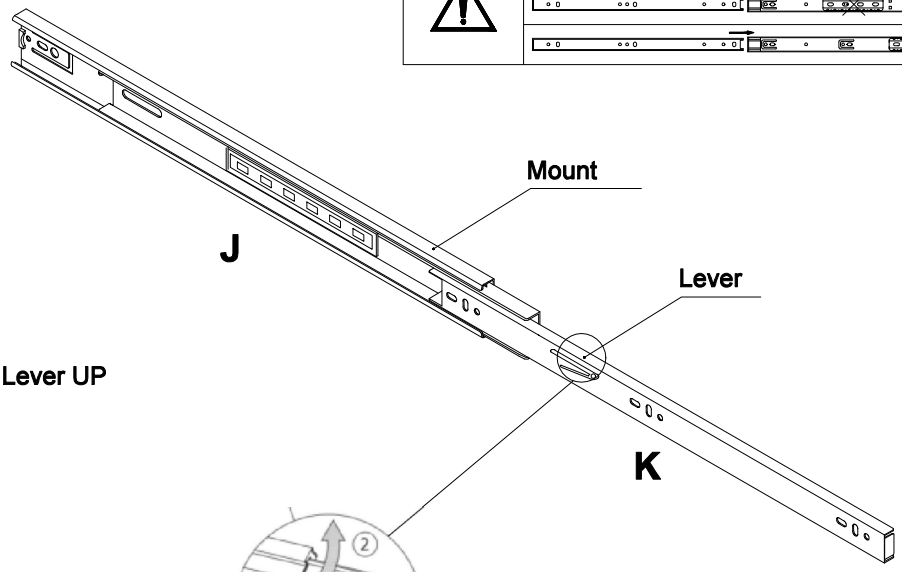

STEP 2: Push Lever UP

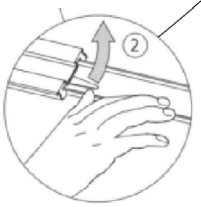

Push lever for the left of drawer ,
press the lever for the right of drawer.

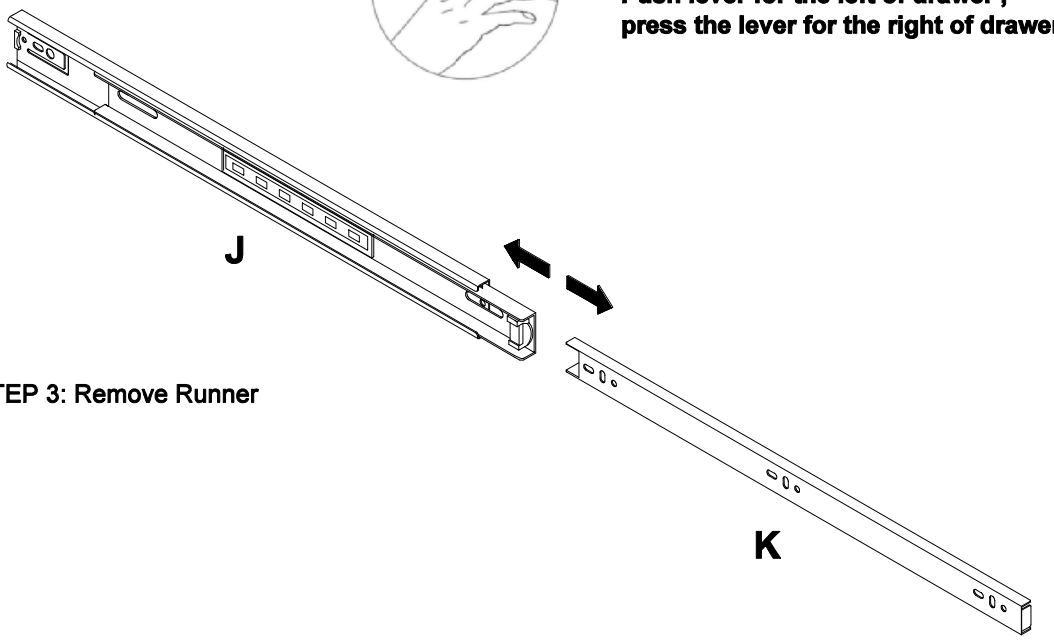

STEP 3: Remove Runner

Detail View - CABINET

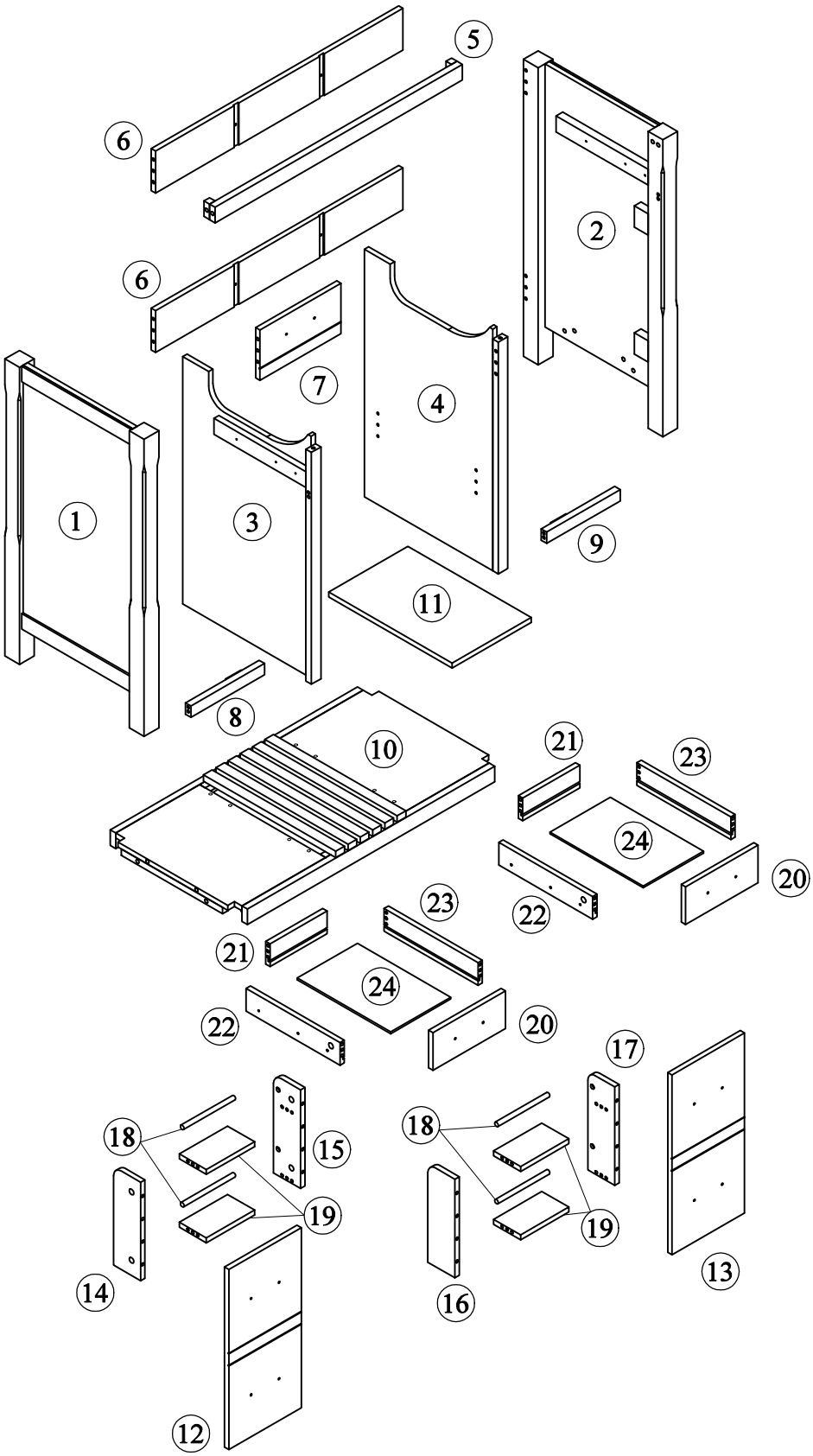

Identifying the Hardware-Identify the hardware using the illustrations below.

Part List

1 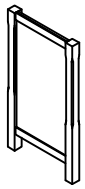 Side Panel (L) - 1pc	2 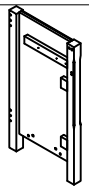 Side Panel (R) - 1pc
3 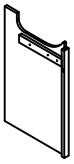 Mid Panel (A) - 1pc	4 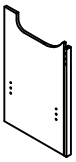 Mid Panel (B) - 1pc
5 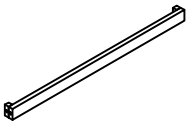 Front Top Bar - 1pc	6 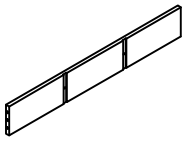 Top+Bottom Rear Panel - 2pcs
7 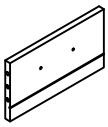 Mid Pannel - 1pc	8 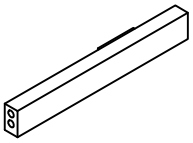 Mid Bar (L) - 1pc
9 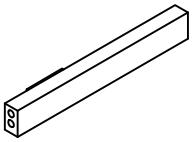 Mid Bar (R) - 1pc	10 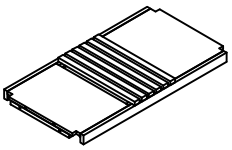 Bottom Frame - 1pc
11 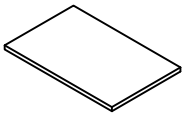 Adjustable Shelf - 1pc	12 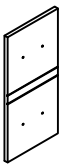 Cabinet Door (L) - 1pc
13 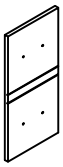 Cabinet Door (R)- 1pc	14 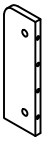 Door Side Panel (A) - 1pc

Part List

15 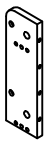 Door Side Panel (B) - 1pc	16 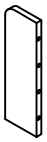 Door Side Panel (C) - 1pc
17 Door Side Panel (D) - 1pc	18 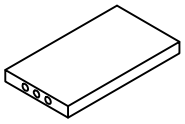 Mid Panel of Door - 4pcs
19 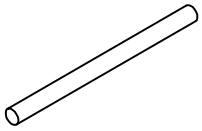 Round Bar - 4pcs	20 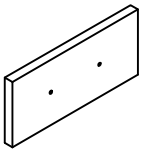 Drawer Face - 2pcs
21 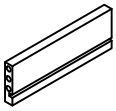 Drawer Back Panel - 2pcs	22 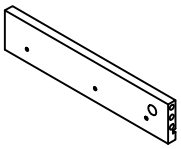 Drawer Side Panel (L) - 2pcs
23 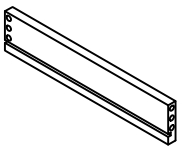 Drawer Side Panel (R) - 2pcs	24 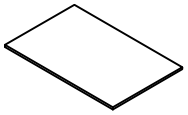 Bottom Drawer Panel - 2pcs

Hardware List

A ø13x1/4"x28mm	B ø1/4"x16x1mm	C ø6x35mm
Hex-Head bolts (6pcs)	Washer (6pcs)	Three in one bolts (52pcs)
D ø14.5x12mm	E ø8xø4x25mm	F
Three in one lock (52pcs)	Round head screw (4pcs)	Handle (7pcs)
G ø5/32"x15mm	H	I ø7xø3.5x15mm
Handle screw (14pcs)	Damping hinge (4pcs)	Flat head screw (24pcs)
J ø300x35mm	K ø298x18mm	L ø6xø3x12mm
Slide rails (4pcs)	Slide rails (4pcs)	Flat head screw (24pcs)
M	N ø7xø3.5x12mm	O ø8x30mm
L-Bracket (2pc)	Round head screw (4pcs)	Wood dowel (54pcs)
P 4mm	Q	R
Allen key (1pc)	Laminate pad(4pcs)	Anti fall hardware (1set)

STEP: 1

C	J	L
14PCS	2PCS	6PCS

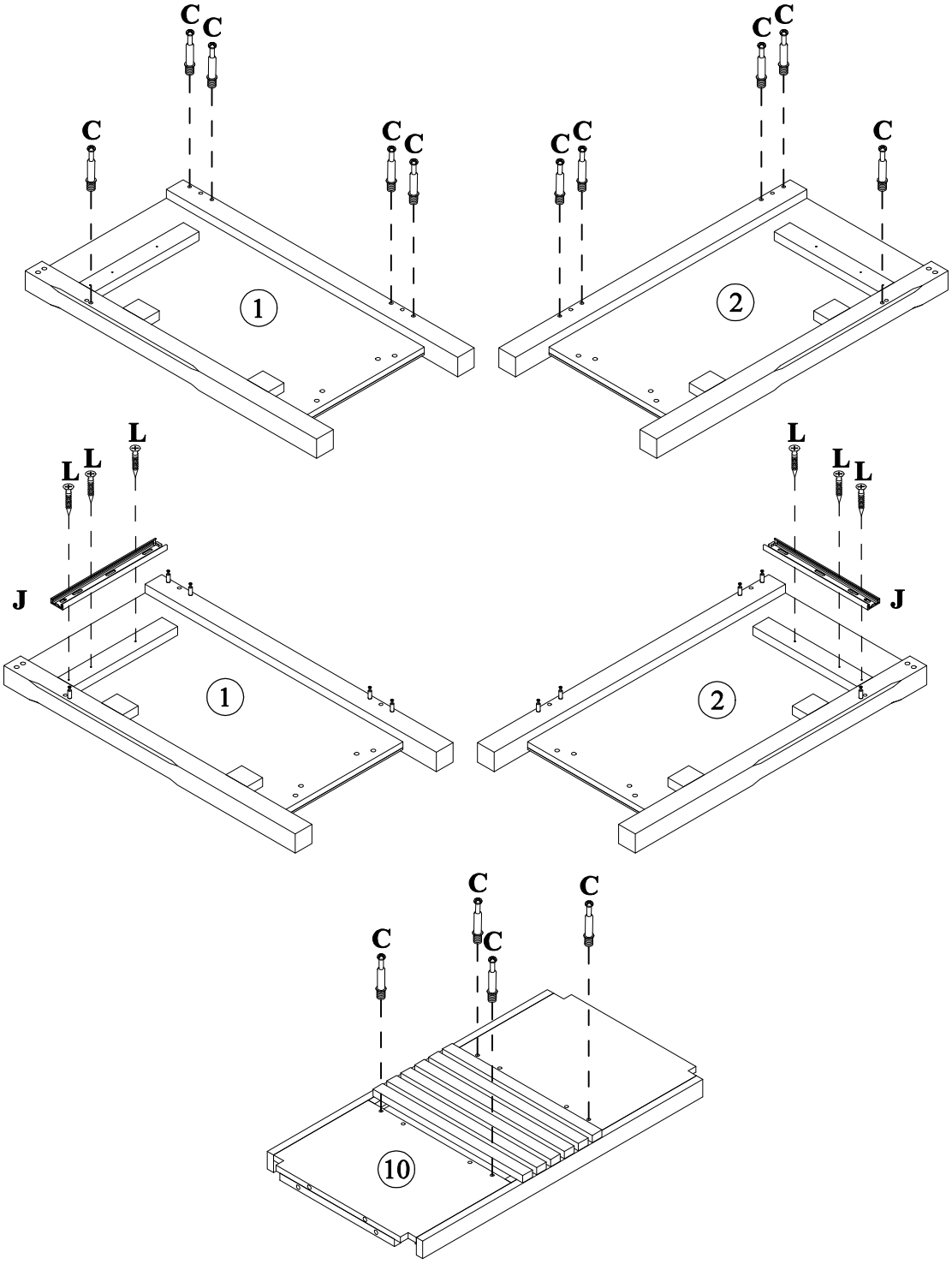

POSITION OF SCSEW

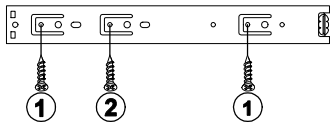

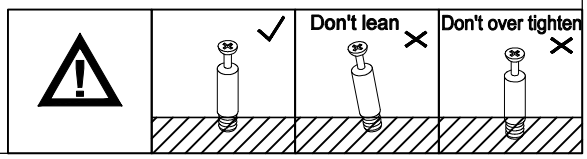

STEP: 2

C	J	L
6PCS	2PCS	6PCS

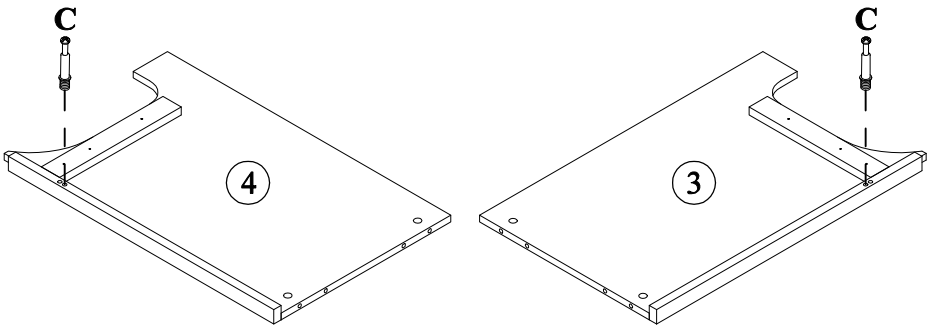

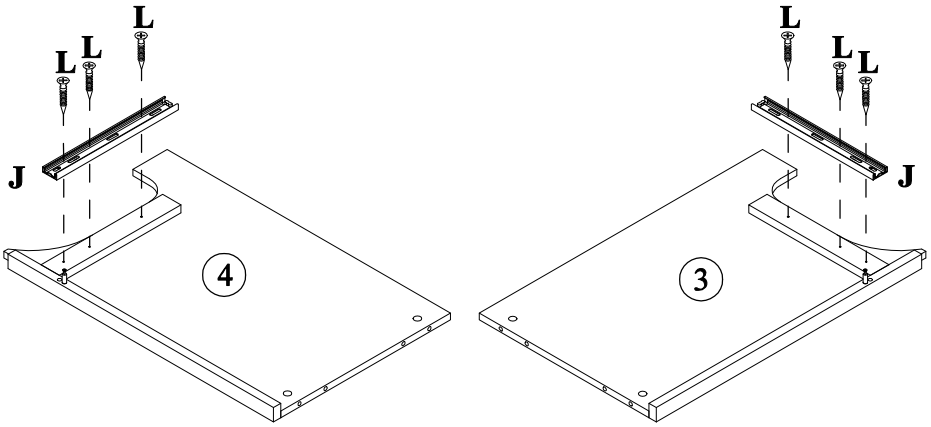

Turn over and install screw

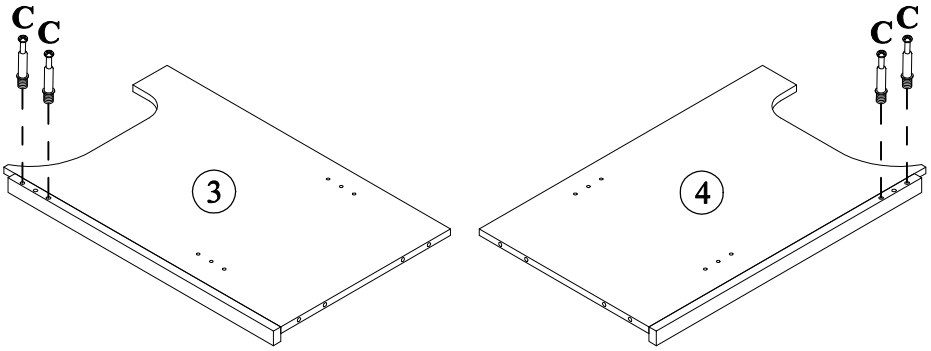

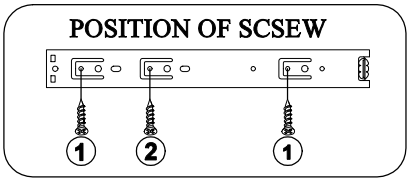

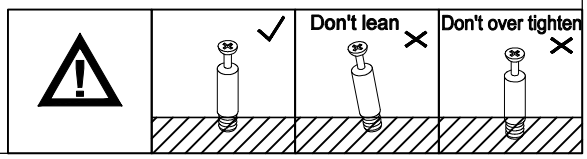

STEP: 3

D	O
4PCS	2PCS

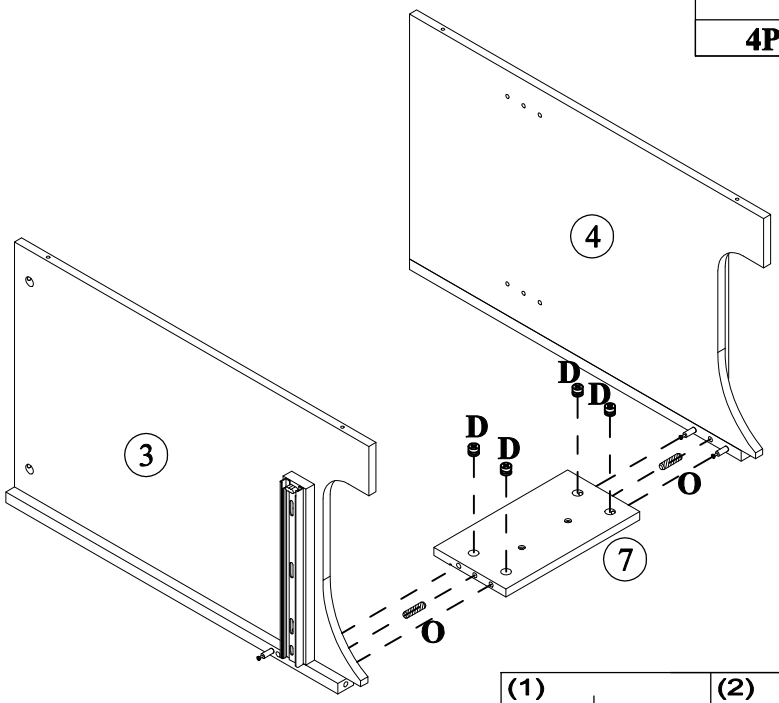

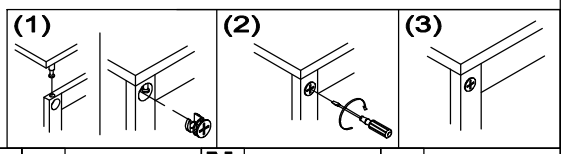

STEP: 4

D	M	N	O
2PCS	2PCS	4PCS	4PCS

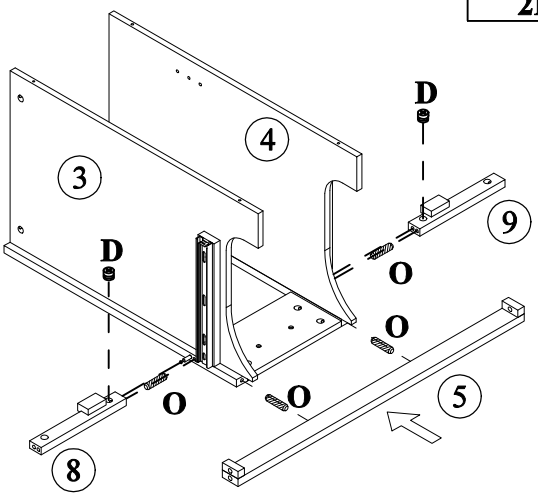

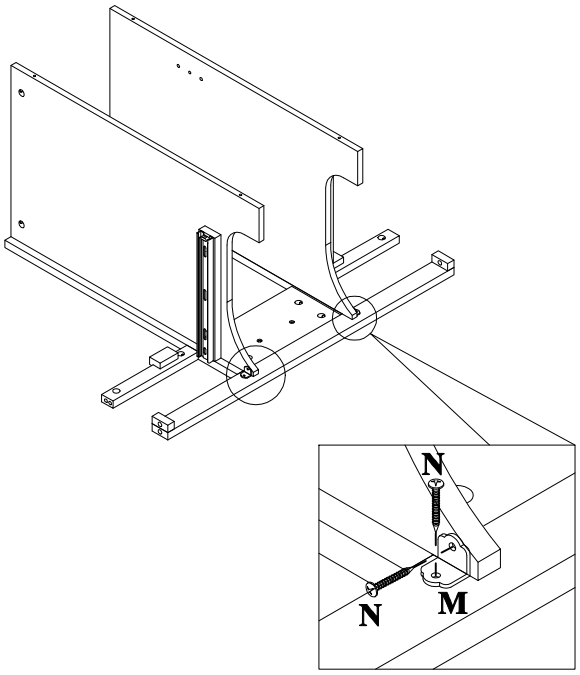

STEP: 5

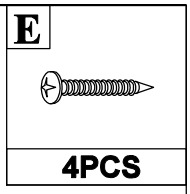

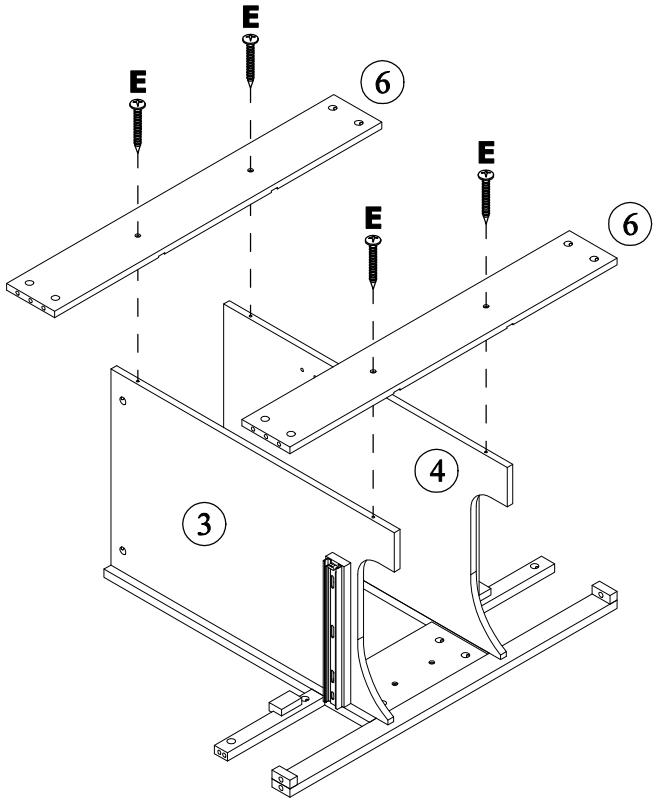

STEP: 6

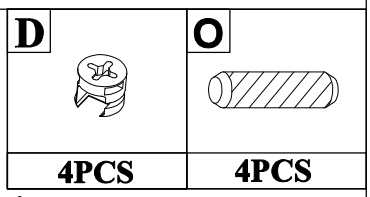

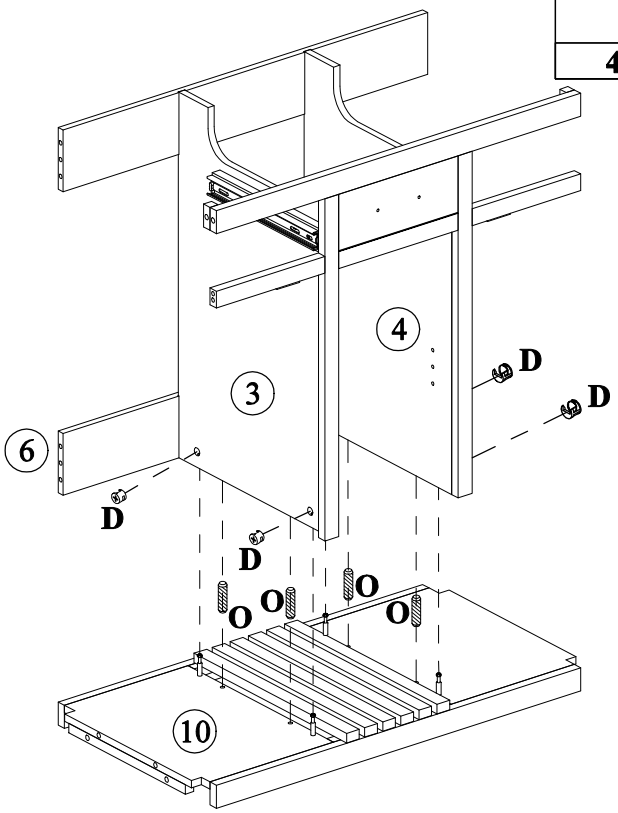

STEP: 7

A	B	D	O
3PCS	3PCS	5PCS	6PCS

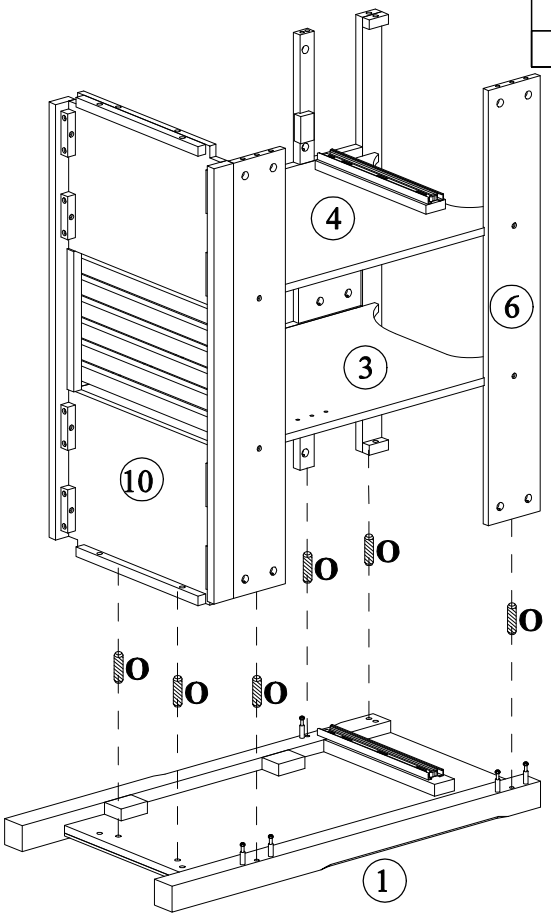

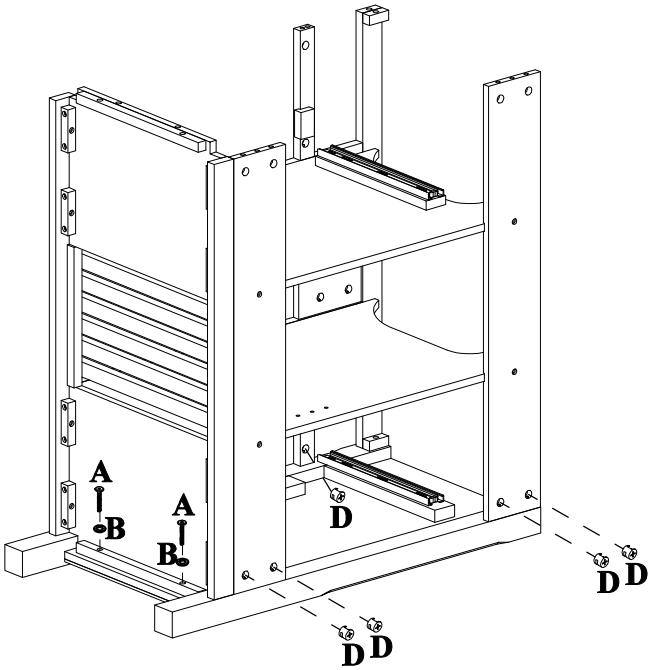

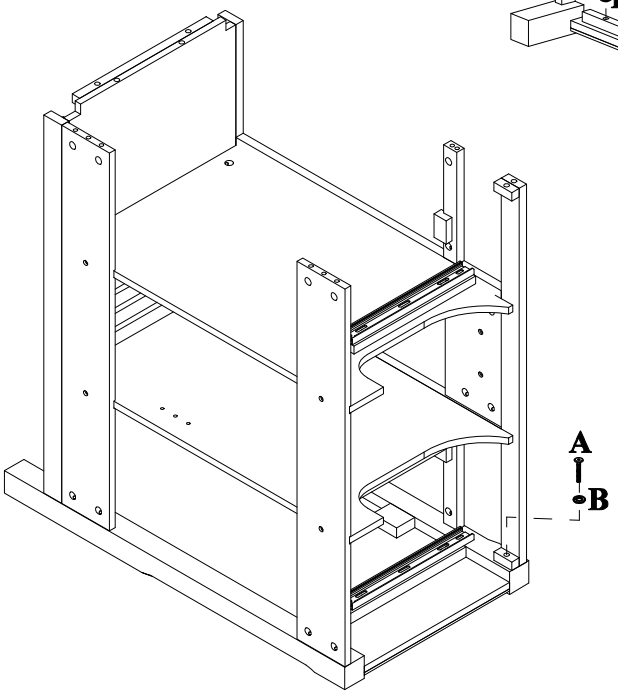

STEP: 8

A	B	D	O
3PCS	3PCS	5PCS	6PCS

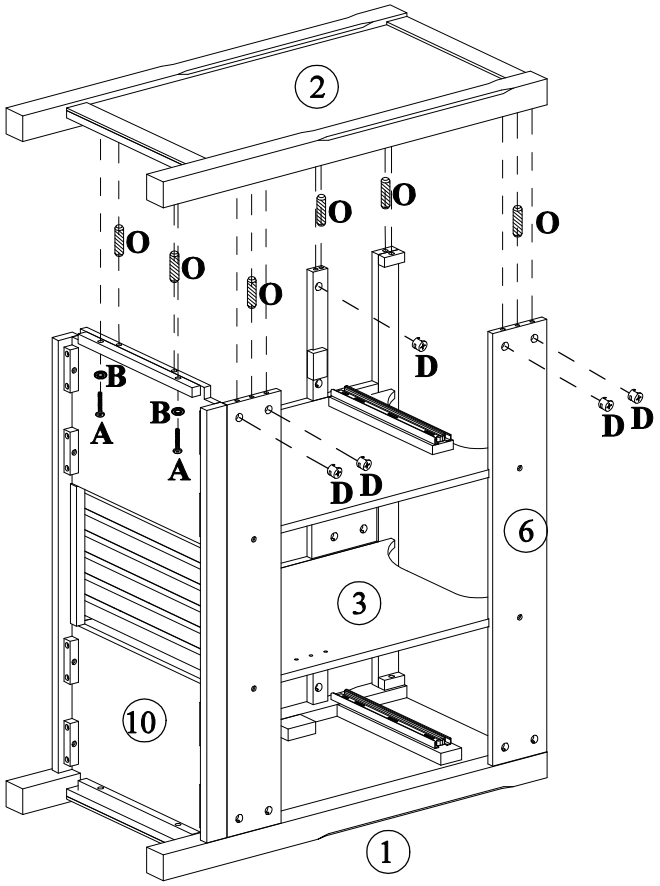

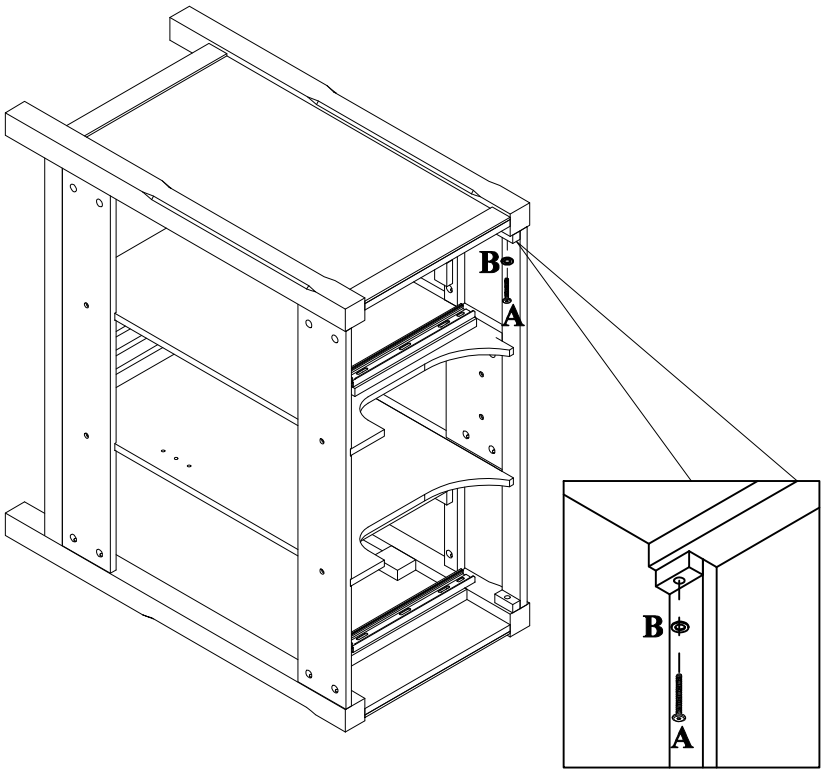

STEP: 9

C	D	O	F	G
12PCS	12PCS	8PCS	2PCS	4PCS

H	I
2PCS	4PCS

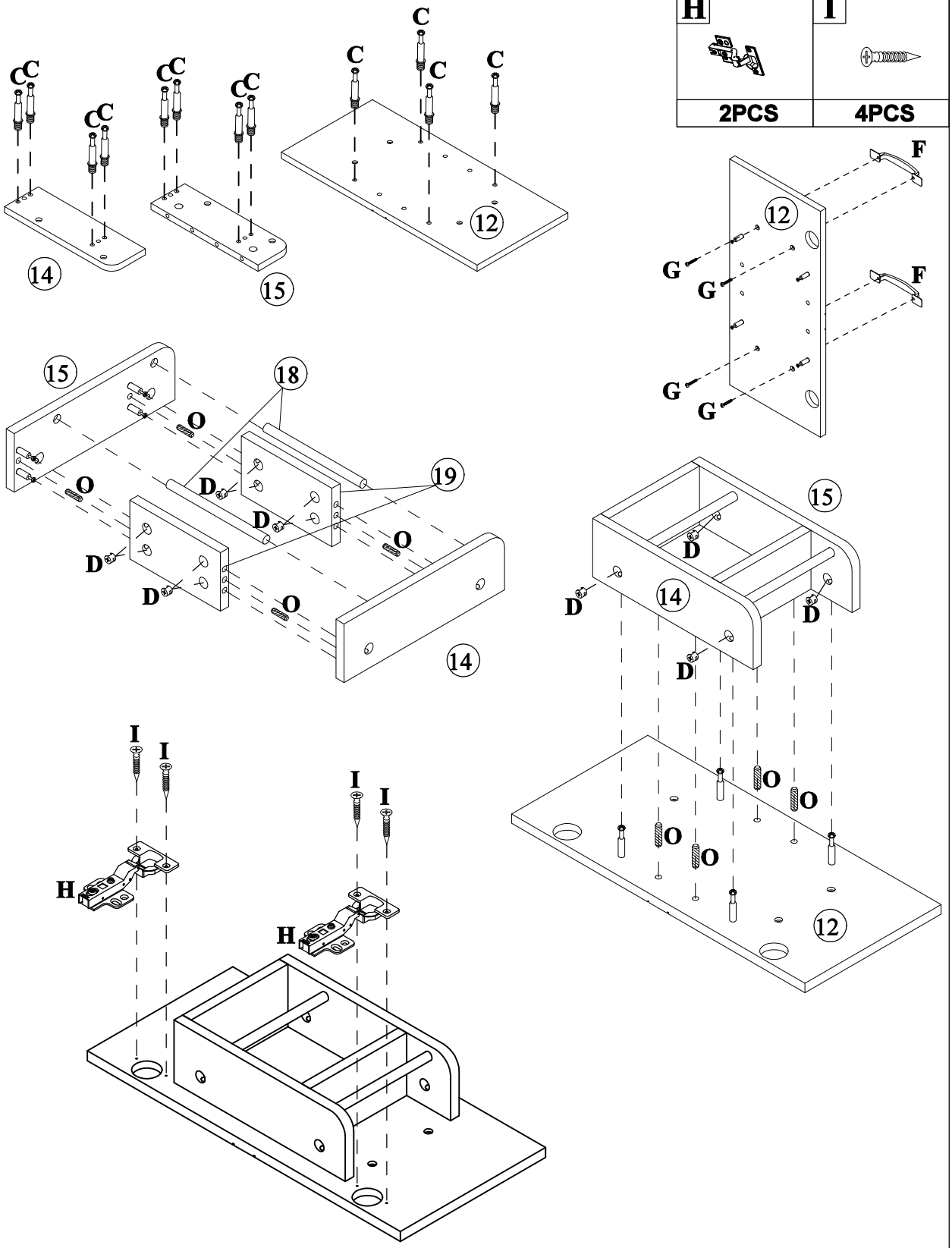

STEP: 10

C	D	O	F	G
12PCS	12PCS	8PCS	2PCS	4PCS

H	I
2PCS	4PCS

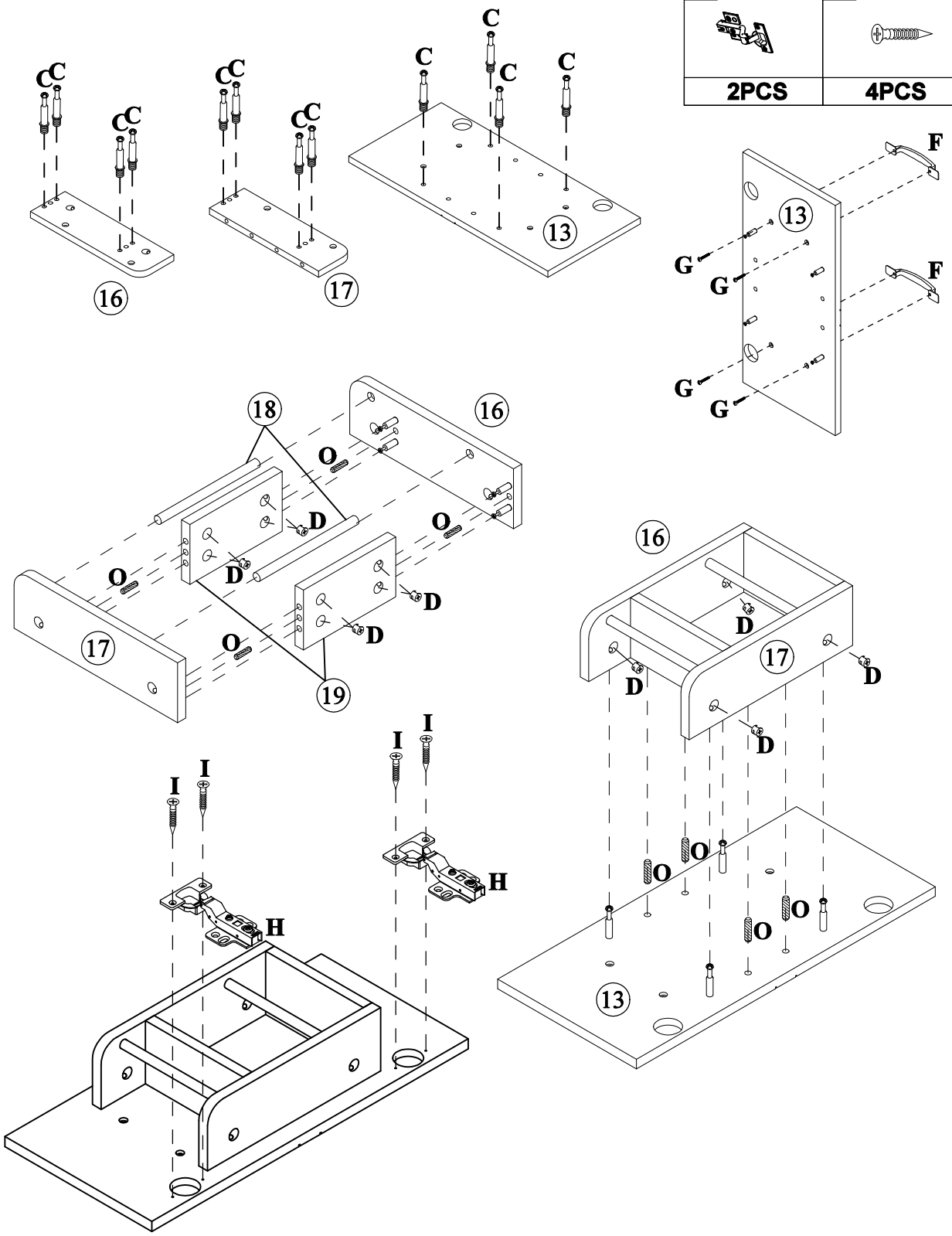

STEP: 11

F	G	I
1PC	2PCS	16PCS

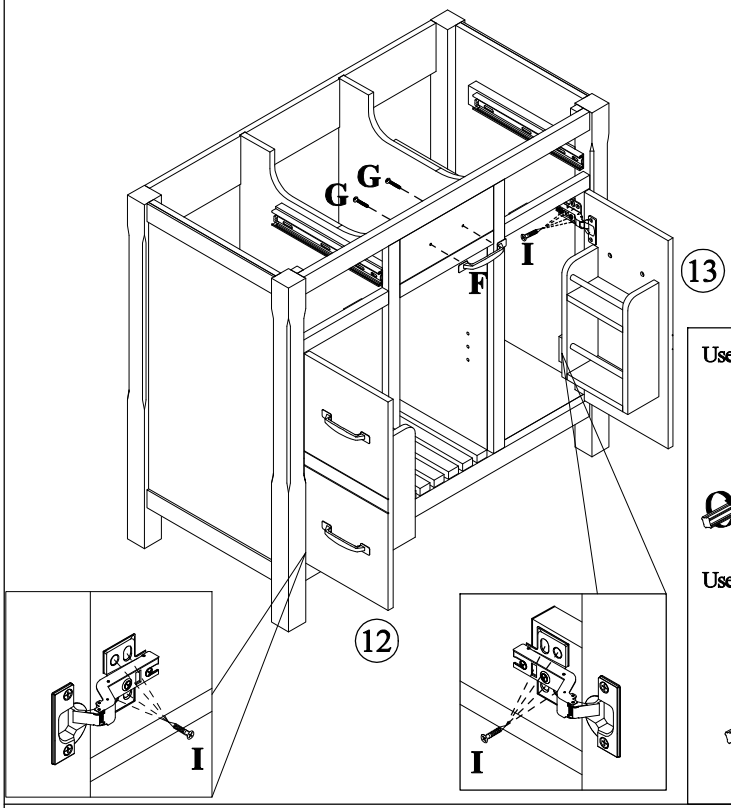

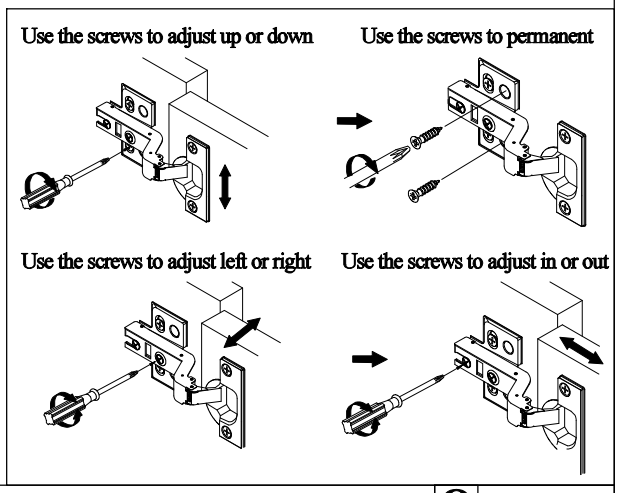

STEP: 12

Q
4PCS

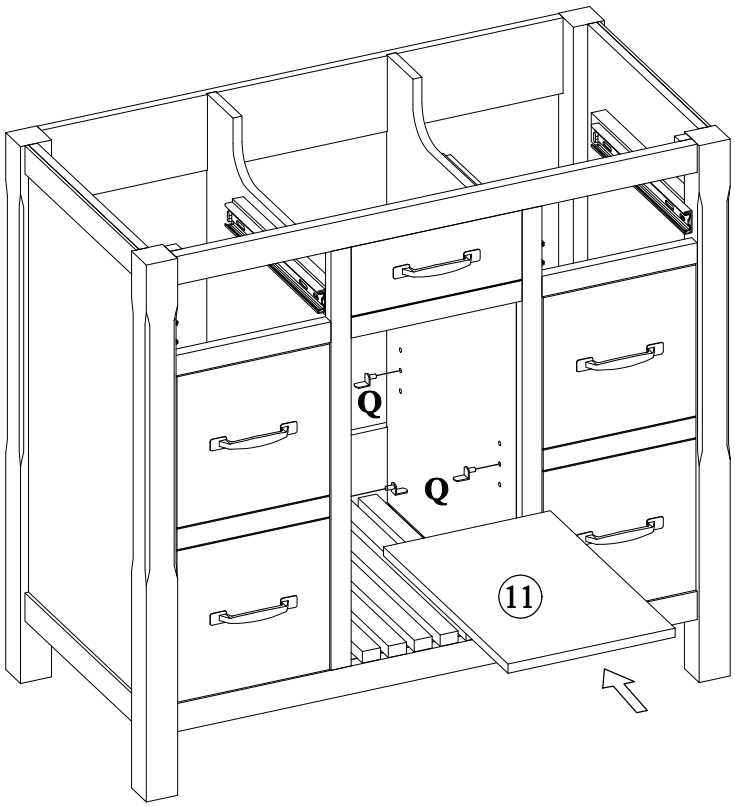

STEP: 13

C	D	O	F	G
8PCS	8PCS	16PCS	2PCS	4PCS

K	L
4PCS	12PCS

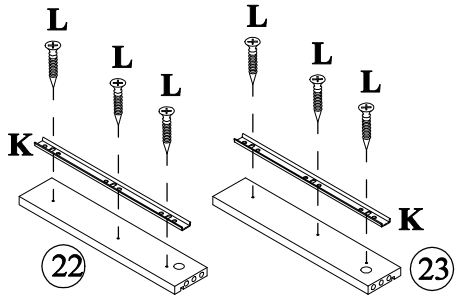

Turn over and install screw

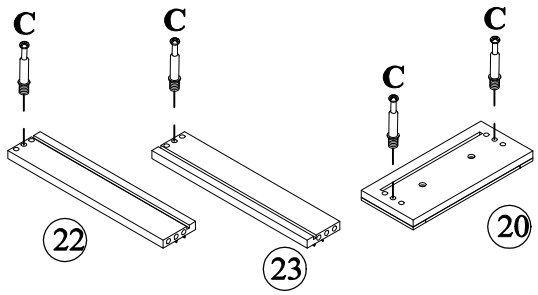

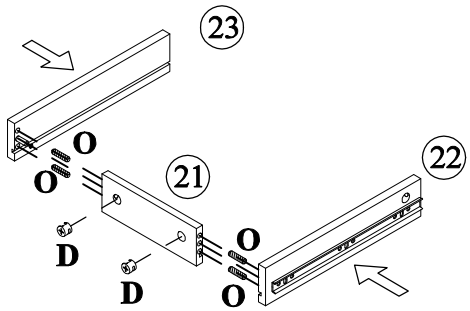

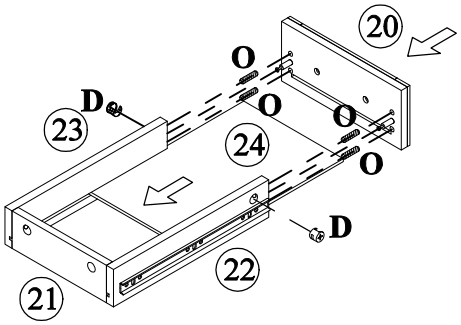

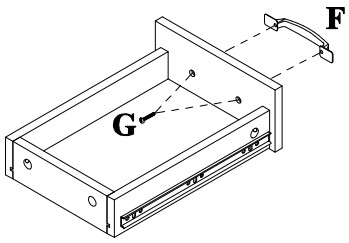

POSITION OF SCREW

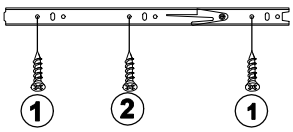

x2

STEP: 14

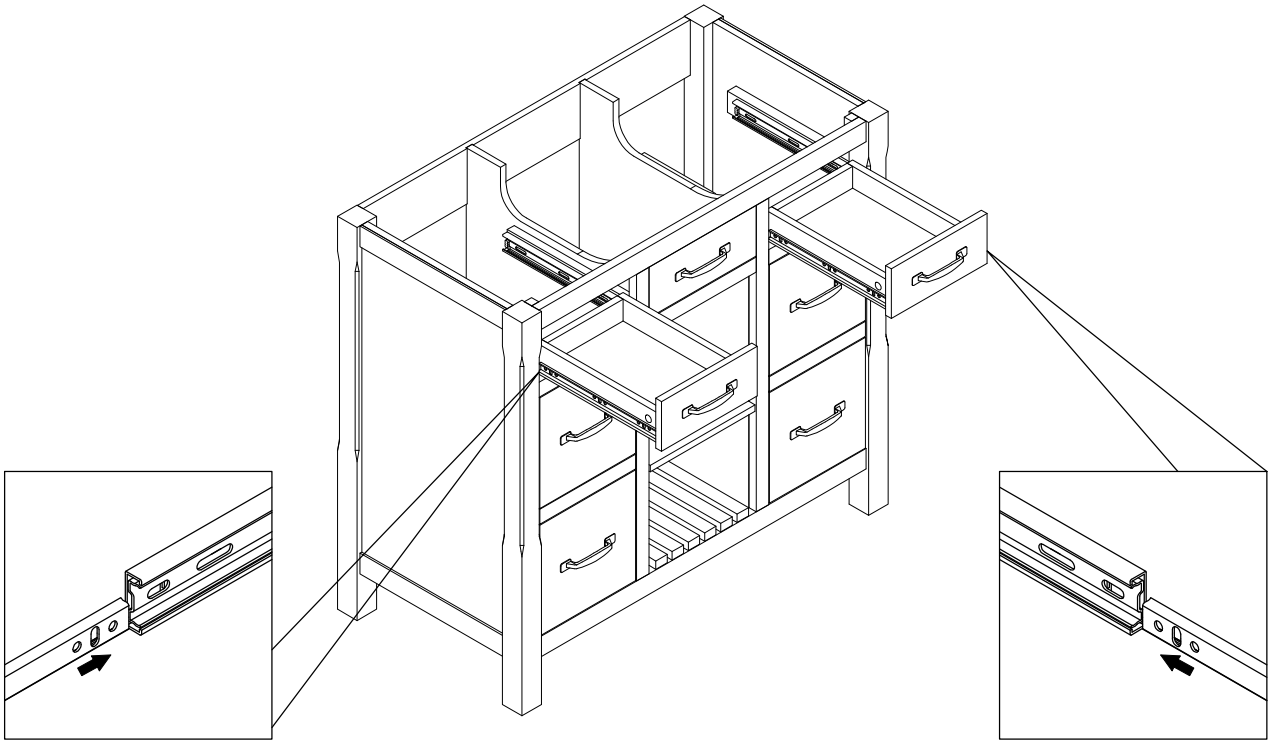

STEP: 15

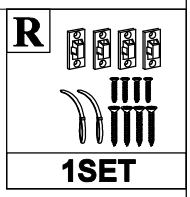

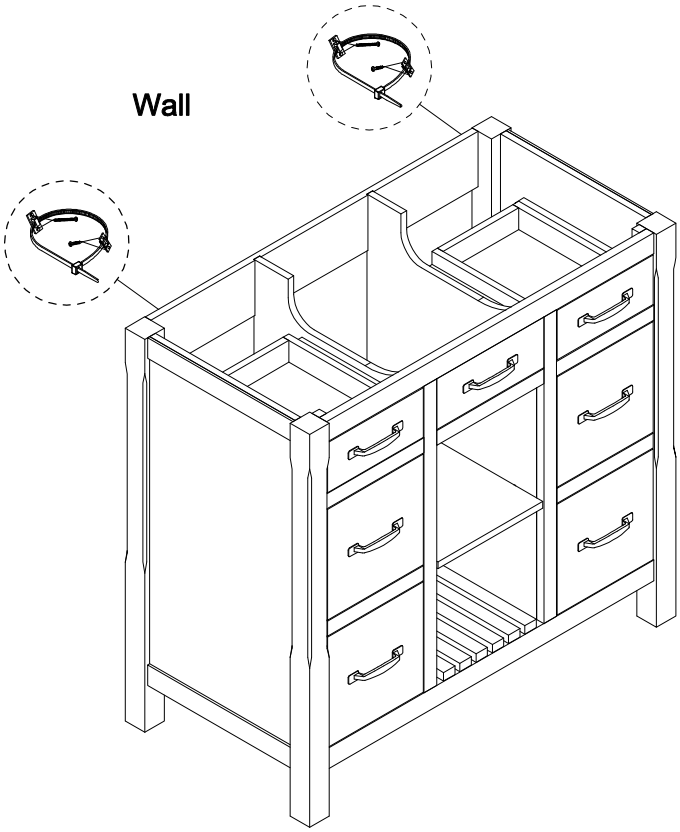

STEP: 16

Install the sink on the cabinet with glue.
Let stand for 24 hours

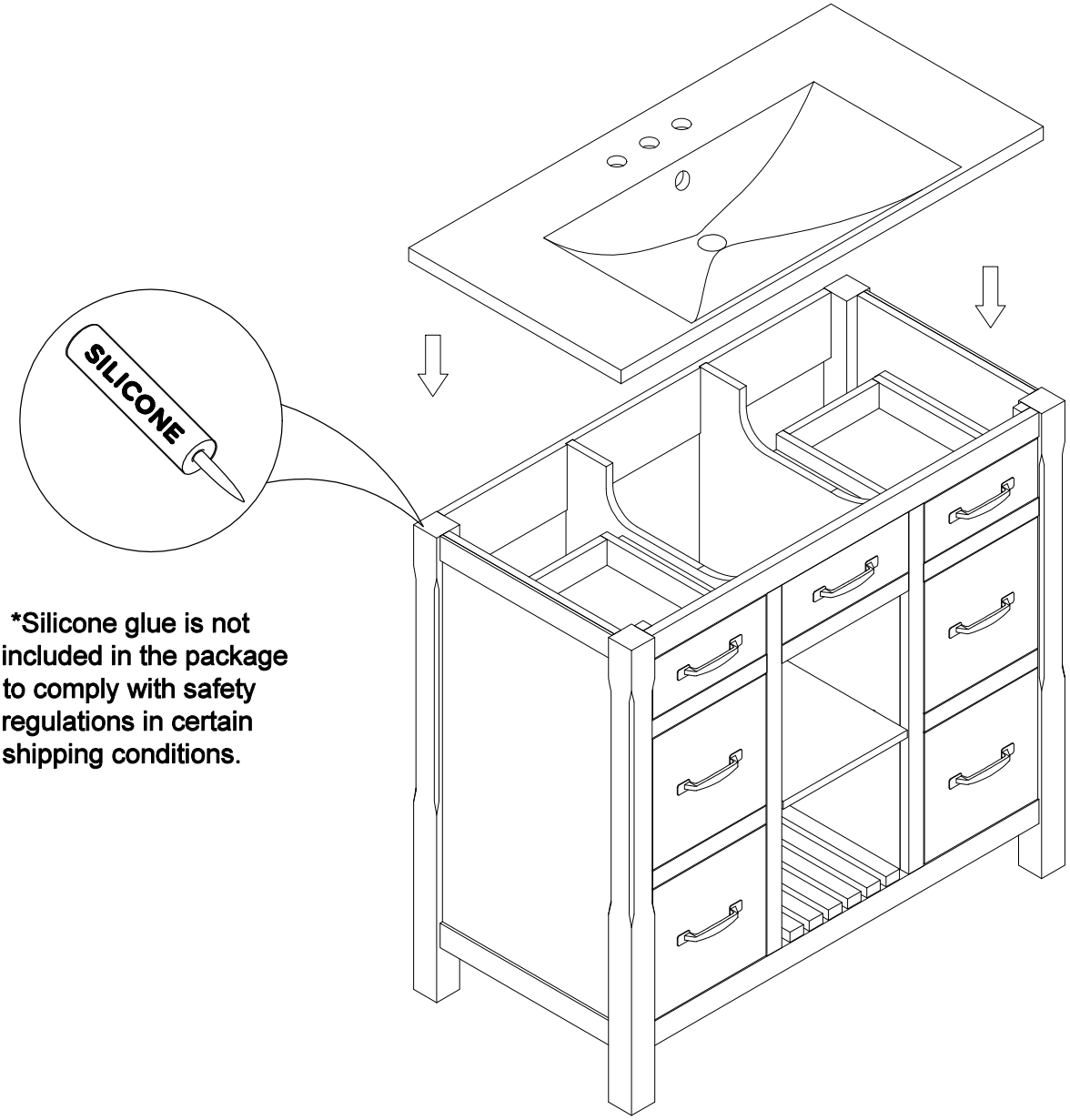

*Silicone glue is not included in the package to comply with safety regulations in certain shipping conditions.

STEP: 17

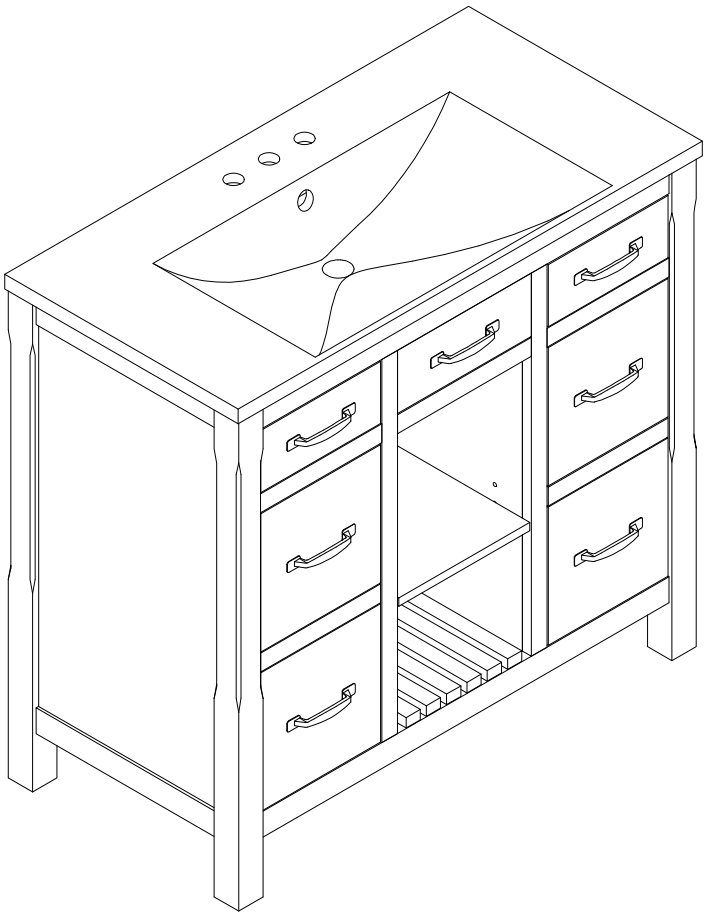

HINGE ADJUSTMENTS

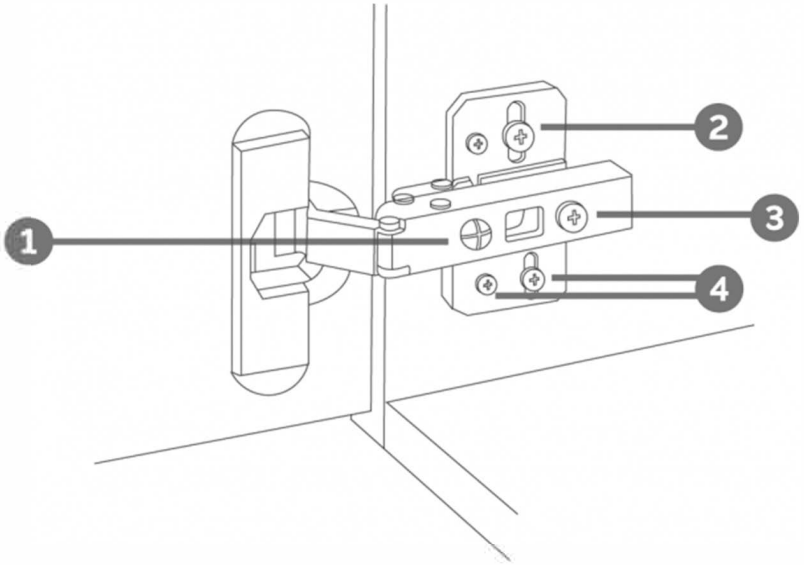

1 Sideways / Tilt adjustment

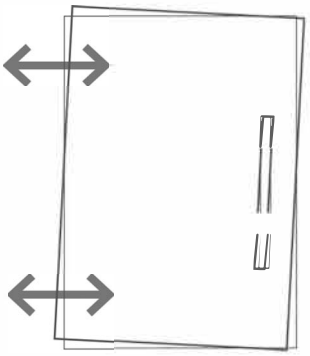

Turn the screw
clockwise to move the door further away from the side of the cabinet
anticlockwise to move the door closer to the side of the cabinet

2 4 Height adjustment

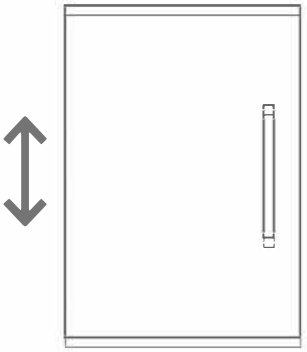

While supporting the weight of the door, turn the screws
clockwise to move the door up
anticlockwise to move the door down

3 Forward and back adjustment

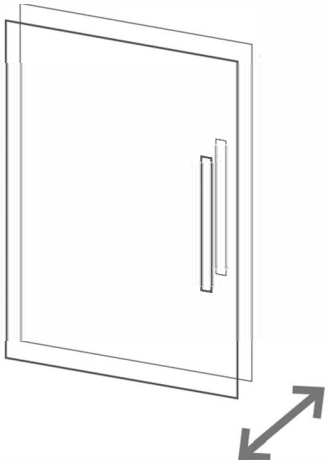

If the gap between the back of the door and the cabinet is too small, and the door may not close fully. Turn the screw
clockwise to decrease the gap between the door and the cabinet
anticlockwise to increase the gap between the door and the cabinet