COMBINATION SOFA

The product comes in 2 BOXES. Do not proceed with unpacking or assembly until both boxes are received.



- To prevent the hardware package from being lost, a special loss-prevention cord is included. Use it to locate the hardware package.

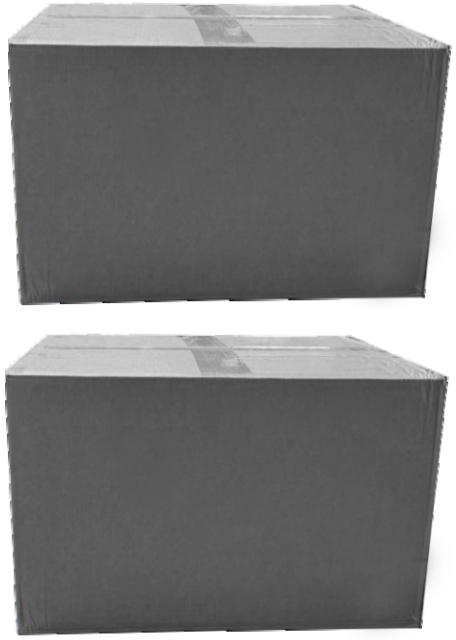

Carton 1 of 2 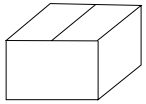

Carton 2 of 2 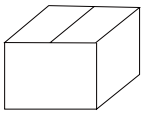

- Box identification is shown in the location indicated in the picture on the left of the outer box. The assembly guide and accessory box (including hardware, socket, lamp, and remote) are in box 1/2. Please locate all accessories from both boxes before assembly.

V1.0

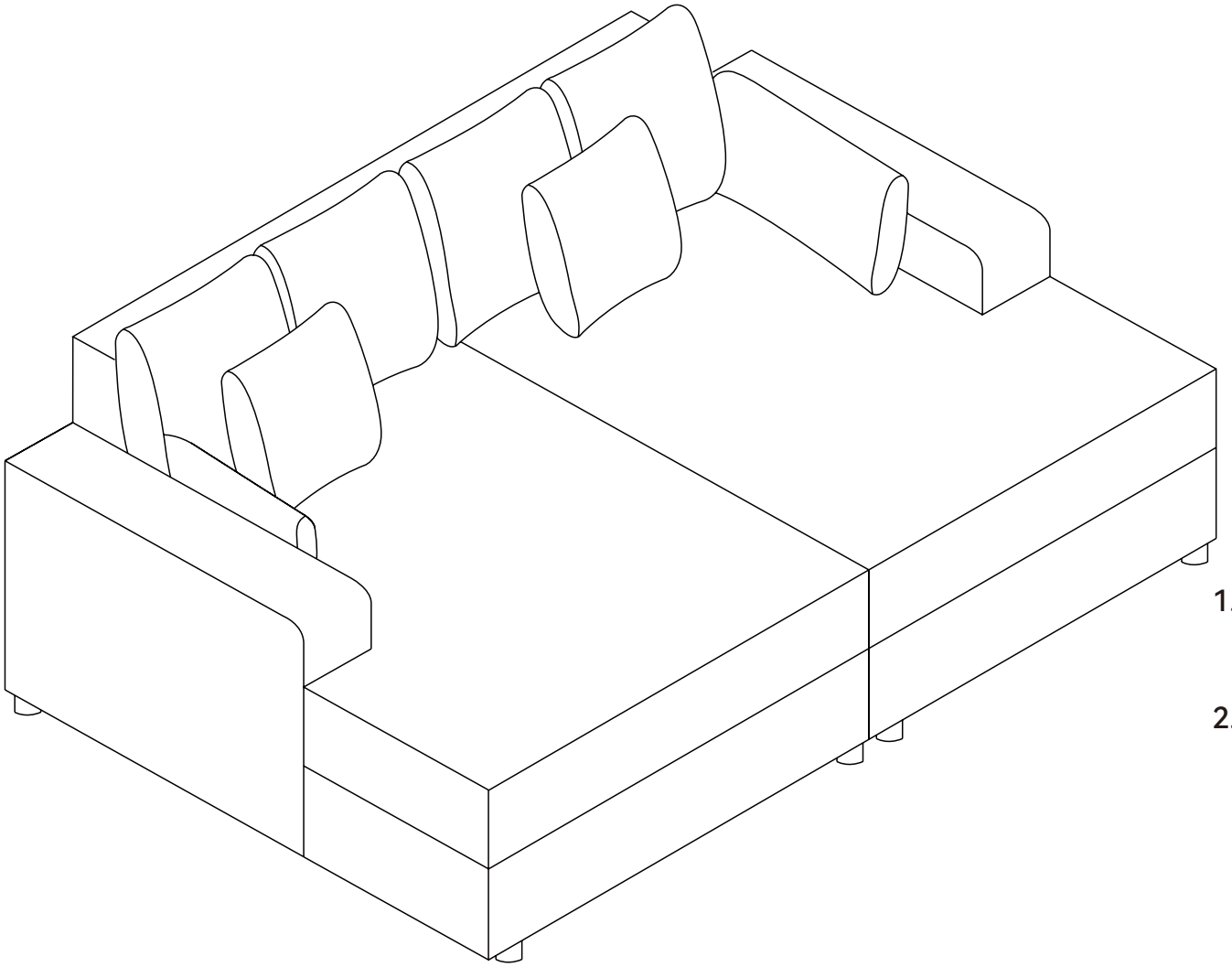

1. There are2 boxes of products, please do not further unpack and install before receiving the complete2 boxes.
2. Assembly instructions(located in the Box1), hardware accessories please find all hardware accessories before installation.

EN

Sofa

THE FOLLOWING INFORMATION:

- Order number
- Purchase platform
- Purchase date
- Detailed description of the issue along with photos (if applicable)

Important – Please read these instructions carefully before starting the installation.

BEFORE INSTALLATION

- Please read this guide carefully so that you are familiar with the required tools, materials and installation procedures. Please follow the applicable section to install this product to avoid unnecessary losses caused by improper installation, and be sure to read all operating and safety guidelines in addition to the correct installation method.

- All information recorded in this guide is based on all current product conditions at the time of printing and we reserve the right to change product features, packaging or availability at any time without prior notice. Before installing furniture, confirm that all required electrical work has been completed.

- The manual contains important installation, cleaning and maintenance aspects, so please read and keep these materials in their entirety

- **Before installation, carefully inspect the new product for damage.**
  It should be placed on a clean, flat ground for installation to maintain balance.
  This product should be protected from prolonged moisture and sun exposure.
  Furniture should be wiped down frequently to keep it clean to avoid the growth of bacteria. Use a wrung out wet towel to avoid scratching the lacquer surface.
  Avoid contact with corrosive liquids such as acids and alkalis.
  Pay attention to product protection during installation, and handle it gently to avoid scratches

SAFETY WARNINGS

- Follow the warning information that appears on this product and the box. Do not remove the warning label.
- Regularly check and confirm that all components of the product are installed in the correct position, without damage, and that all connectors are tight.
- Play on or under the sofa is not allowed, and jumping on the sofa is prohibited.
- Do not use replacement parts. If a part needs to be replaced, contact the manufacturer or dealer to replace the part
- No machine washing
- Please keep these instructions for future reference.
- Safety is a joint effort between us as a manufacturer and you as a guardian. When choosing a sofa, read and consider the warnings on the page.
- Winding hazard
- Winding hazard
- Do not hang or attach to any part of this product anything that is not designed for this bed; Includes but is not limited to hooks, belts and jump ropes

Safety and Care Advice

Important - Please read these instructions fully before starting assembly

Thanks for your purchase. Before assembling, please follow the instructions to check if all the spare parts and screws are intact.

- Considering the size and weight of the sofa, we recommend two adults to assemble the sofa, on a carpeted or padded area, in the room that it is intended for. Approximate assembly time: 30 minutes.

- Please do not throw away any of the packaging or the instruction until you have checked all the components and hardware and the furniture is fully assembled. Please ensure that the packaging is disposed in a safe and environmentally friendly way.

- Keep all components and packaging out of reach of children or animals to avoid the risk of choking or suffocation.

- Please do not take off the cover, and do not wash.

Your cushions come vacuum packed and sealed for shipping. To restore the cushion's original shape, follow the steps below.

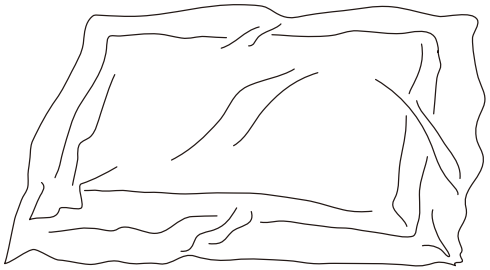

Open the vacuum bag carefully.

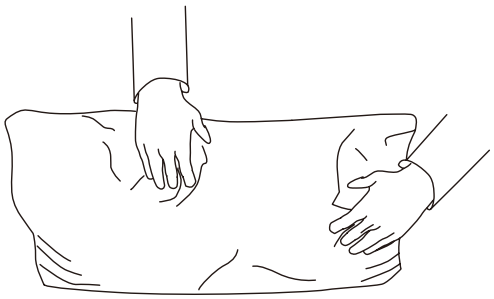

Press and tap with both hands
from the side to fully inhale air.

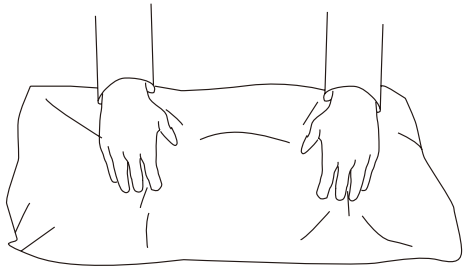

Press and tap with both hands
from the front to fully inflate.

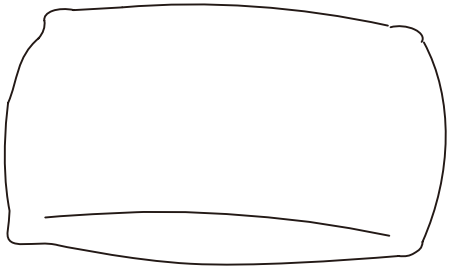

Carefully smooth out each
section unti the surface is even.

After packing up, place them somewhere dry and ventilated. After about 72-96 hours, it can be restored to the best-use condition.

CUSTOMER SERVICE GUIDE

Thank you for choosing our product! We are committed to providing you with excellent service. If you find any missing parts, damaged packaging, or product damage after receiving all packages, please follow the steps below to quickly contact our customer service team. We will do our best to resolve your issue.

1. Missing Parts

Verify Parts:

1. Refer to the " Parts List " in the manual to verify the name, specifications, and quantity of the missing parts.
2. Take a clear photo of the parts list and mark the missing parts with detailed information, e.g., " Missing 5 pieces of M6×30mm screws."

Contact Us:

. A description of the missing parts and a photo of the parts list.
. Order details (order number, purchase platform, purchase date).

Product or Packaging Damage

If it affects normal use:

Steps:

Take clear photos or videos showing the damaged parts and the extent of the damage (multi-angle shots are recommended).

Resolution:

After verification, we will arrange for a replacement part, product exchange, or refund as quickly as possible.

If it does not affect normal use:

Steps:

Provide a description of the damage and include relevant photos or videos.

Resolution:

We will provide repair guidance or an appropriate compensation plan based on the specific situation.

Helpful Tips

To process your issue efficiently, please prepare the following information:

. Order details (order number, purchase platform, purchase date).
. Clear photos or videos.
. We are committed to providing quick and professional solutions, no matter the size of the issue, to ensure your satisfaction.

Thank you for your trust and support! We hope you enjoy using our product!

Seller's Notice:
Our product is packed in separate boxes as shown below, and they might be shipped in different batches. Please wait until you received all the boxes then start the assembly.
Noted:Assembly instruction is only provided in Box1.
The following is the list of components contained in these boxes.

BOX1 Main structure accessories

A-1-L		x1
A-4		x2
A-5-L		x1
A-5-R		x1
A-6		x2
A-9		x4
A-10		x6
A-12		x2
A-13		x2
A-15		x2
A-16-L	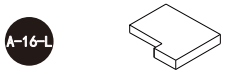	x1
A-16-R	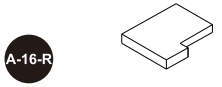	x1
A-17-L	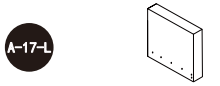	x1
A-18-L	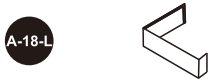	x1
A-18-R		x1

e		x4
f		x12
g	 Lx1 Rx1	x2
h	 Lx1 Rx1	x2

a		M8*18mm ⌀ 5/16*54/64"	x18
b		M8*30mm ⌀ 5/16*1-3/16"	x2
c		M8*45mm ⌀ 5/16*1-49/64"	x24
l			x1
j		M8*⌀22*1.5mm	x24

X2

BOX2 Main structure accessories

A-1-R		x1	A-13	 x2
A-2	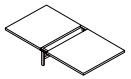	x2	A-14	 x2
A-3-R	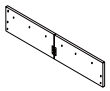	x1	A-17-R	 x1
A-3-L	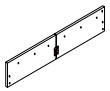	x1		
A-7		x4		

SLEEPSOFA

Assembly Instructions - Please keep for reference

Note:

Delivered with TWO PACKAGES with TWO TRACKINGS, may NOT be deliverded at the same time.

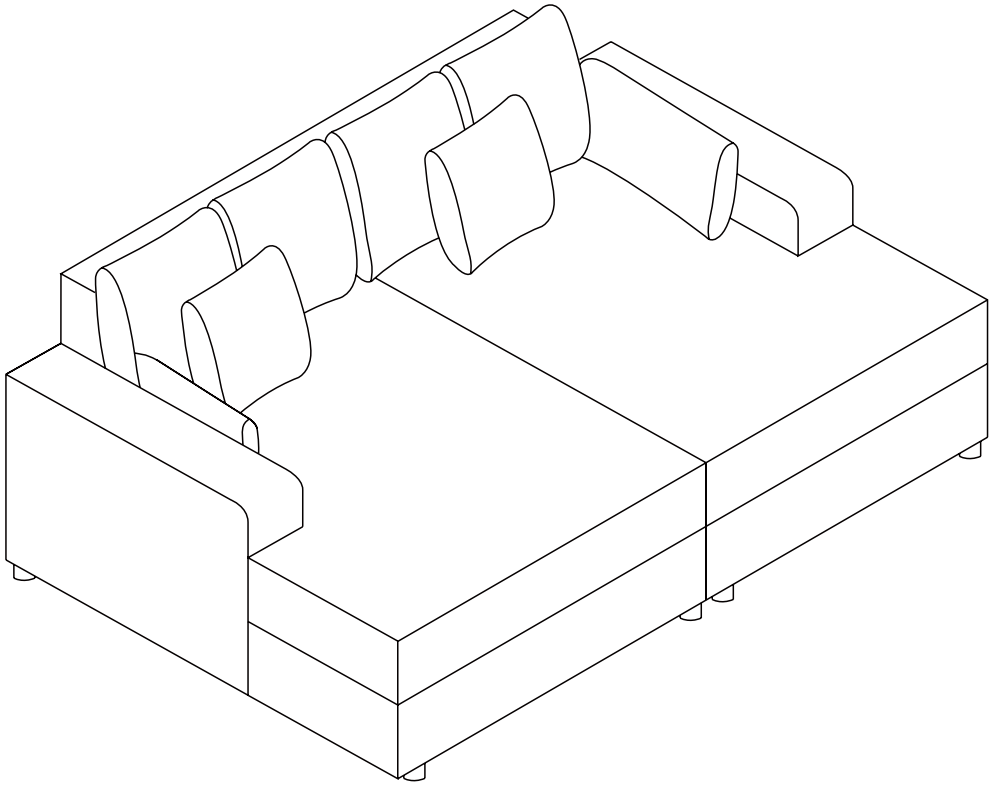



2 people needed

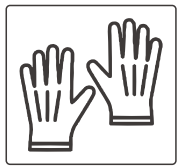

Work gloves



Tape measure

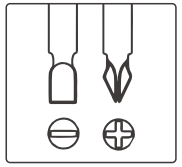

Other Tools Required
Phillips Screwdriver
(Not Included)

SIMPLE ASSEMBLY STEPS

1. Read the manual carefully.
2. Check all parts and hardware.
3. Prepare necessary tools.
4. Have at least two adults for assembly.

Please follow the instructions and use a sanitary napkin to protect the product during your assembly process.
Note:
1. The assembly should be done on a flat surface to maintain balance.
2. Do not tighten the screws before the assembly is complete.
To make the assembly process easier and better, two or more adults are needed.

Important - Please read these instructions fully before starting assembly.

Exploded View of Left Chaise

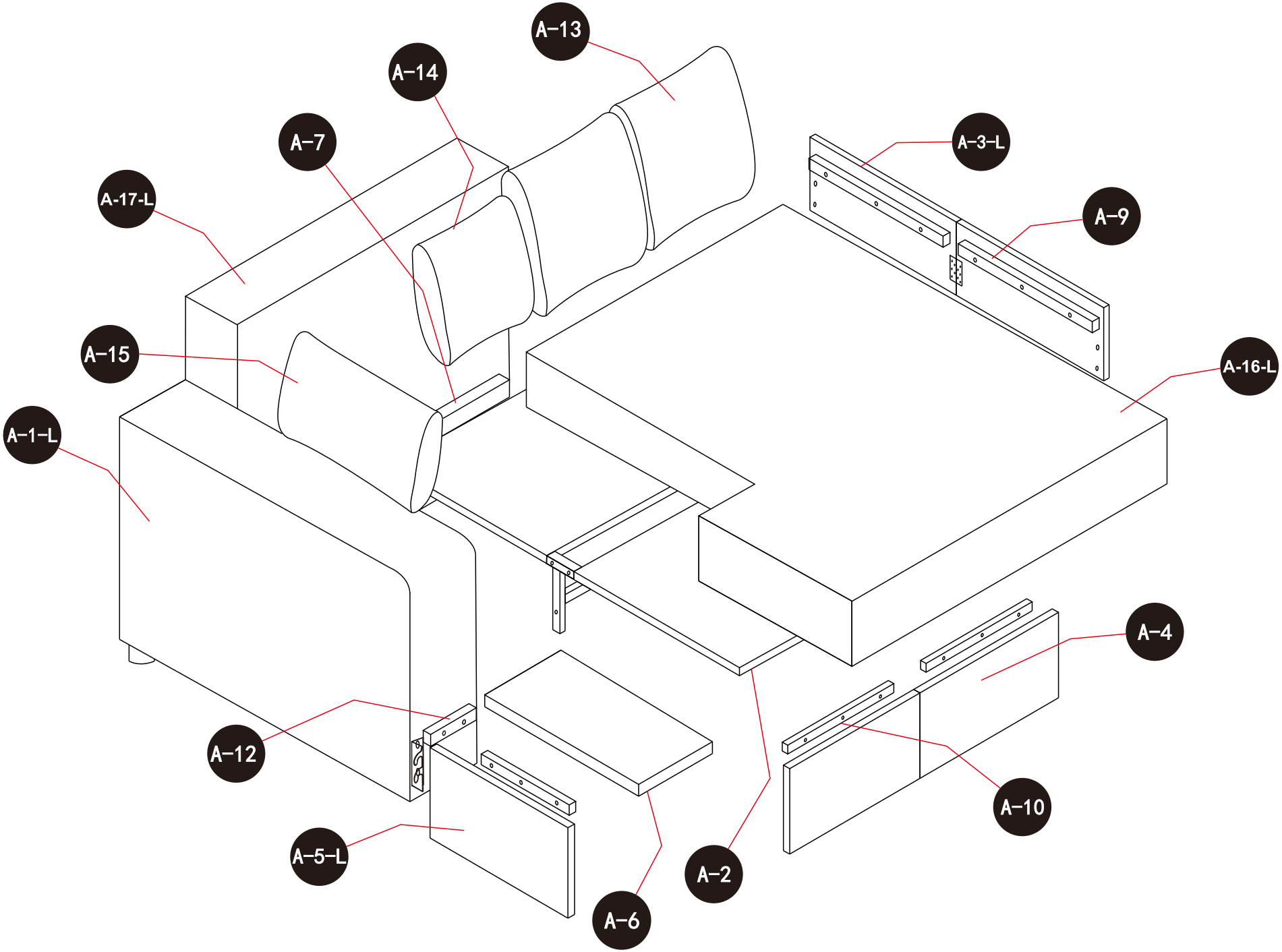

Main structure accessories

A-1-L

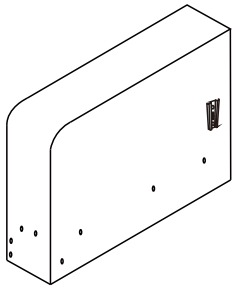

x1

A-2

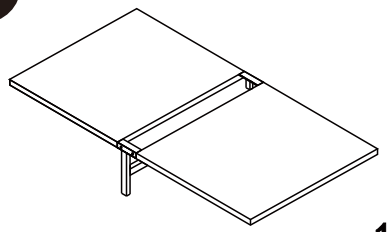

x1

A-3-L

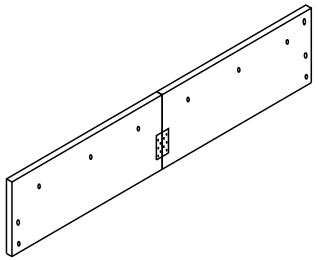

x1

A-4

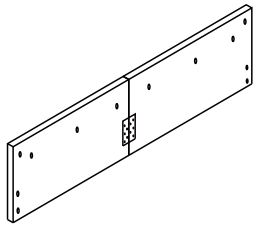

x1

A-5-L

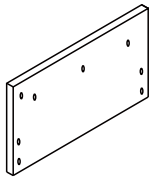

x1

A-6

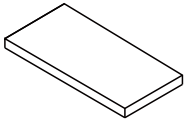

x1

A-7

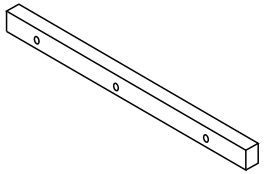

x2

A-9

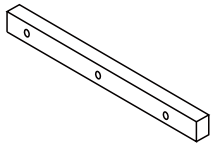

x2

A-10

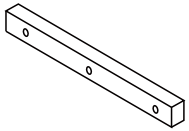

x3

A-12

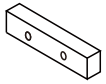

x1

A-13

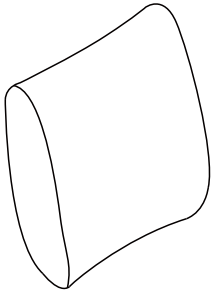

x2

A-14

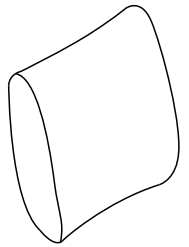

x1

A-15

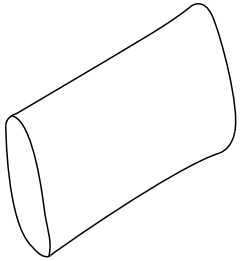

x1

A-16-L

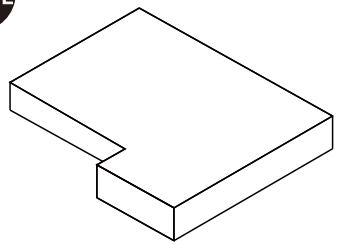

x1

Main structure accessories

A-17-L

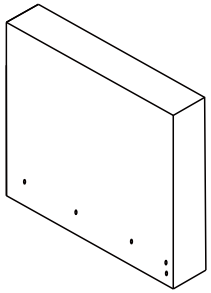

x1

A-18-L

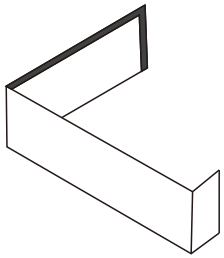

Hardware parts

a

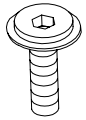

M8*18mm
⌀ 5/16*54/64"
x18

b

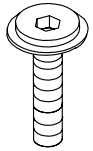

M8*30mm
⌀ 5/16*1-3/16"
x2

c

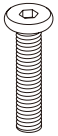

M8*45mm
⌀ 5/16*1-49/64"
x24

d

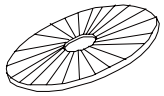

x6

e

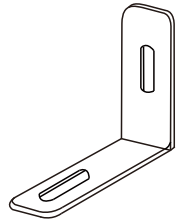

x2

f

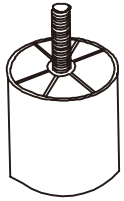

x6

g

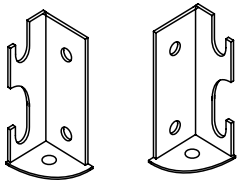

Lx1 Rx1
x1

h

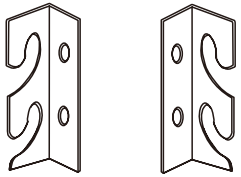

Lx1 Rx1
x1

I



x1

j



M8*⌀22*1.5mm
x24

step 1

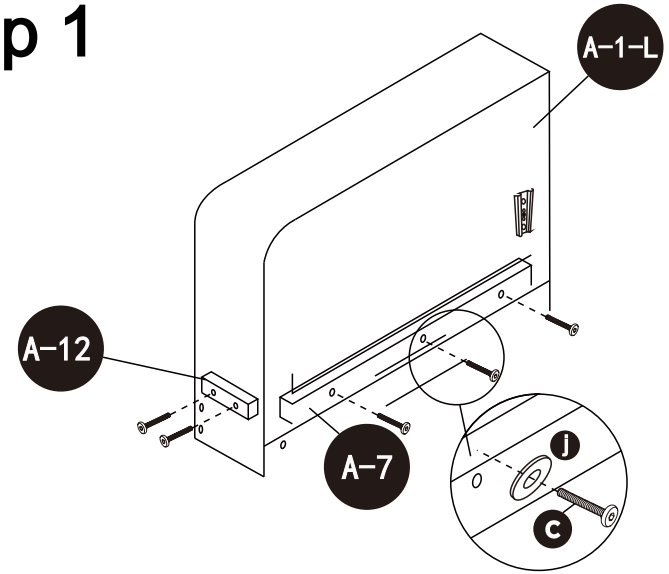

1. Use “c+j” to assemble “A-12” onto “A-1-L”. First tighten the screws to 70%,then fully tighten them.
2. Use “c+j” to assemble “A-7” onto “A-1-L”. First tighten the screws to 70%,then fully tighten them.

j	x5
c	x5
	M8*45mm ⌀5/16*1-49/64"
I	x1

step 2

Use “b” to assemble “h-R” onto “A-1-L”, then tighten it securely.

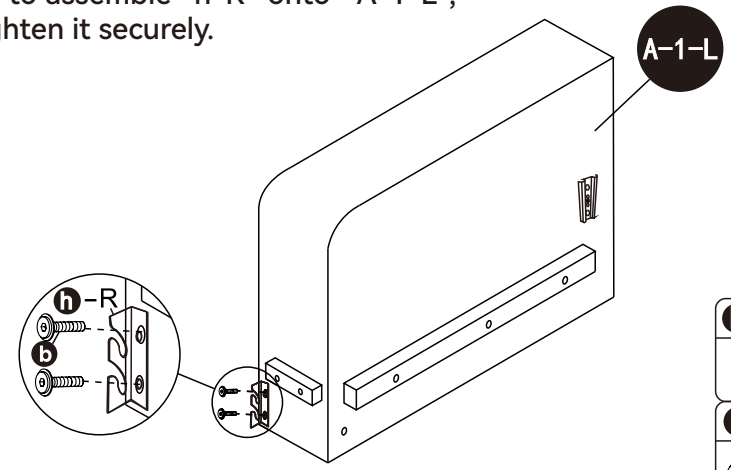

h	x1
	H-R
b	x2
	M8*30mm ⌀5/16*1-3/16"
I	x1

step 3

Use “c+j” to assemble“A-7”onto “A-17-L”. First tighten the screws to70%, then fully tighten them.

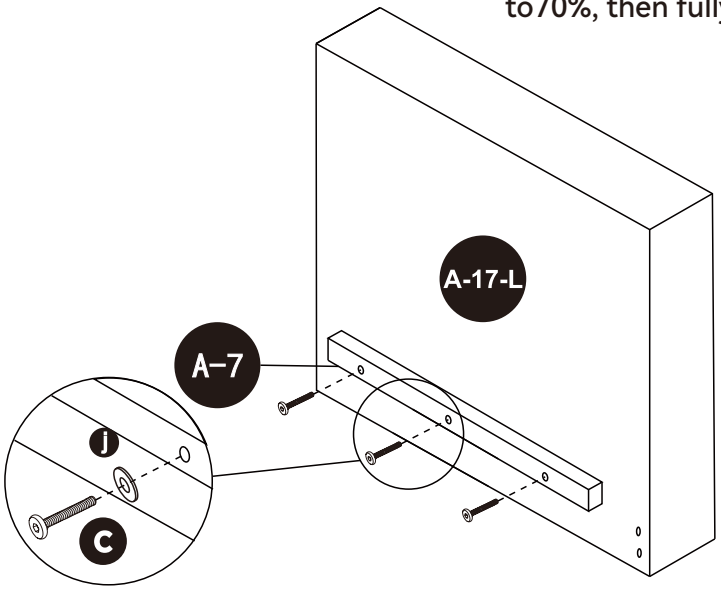

j	x3
c	x3
	M8*45mm ⌀5/16*1-49/64"
I	x1

step 4

Use “a” to assemble “h-L”onto “ A-17-L”,then fully tighten them.

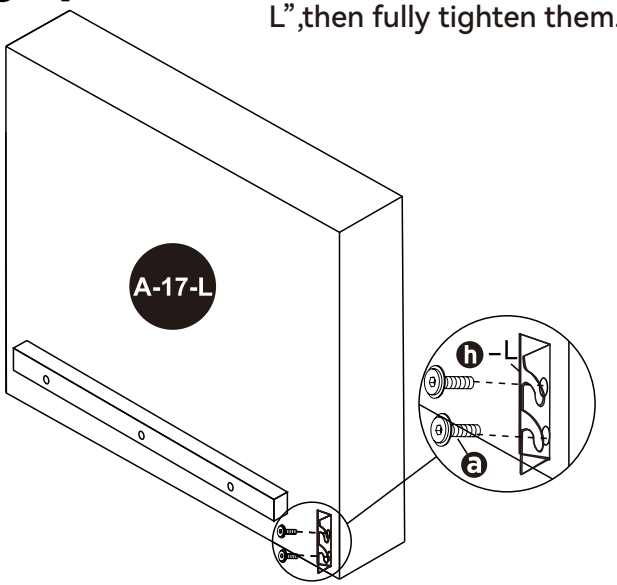

h	x1
	L
a	x2
	M8*18mm ⌀5/16*54/64"
I	x1

step 5

Align the male and female connectors horizontally, then insert downward to assemble “A-1-L” with “A-17-L”.

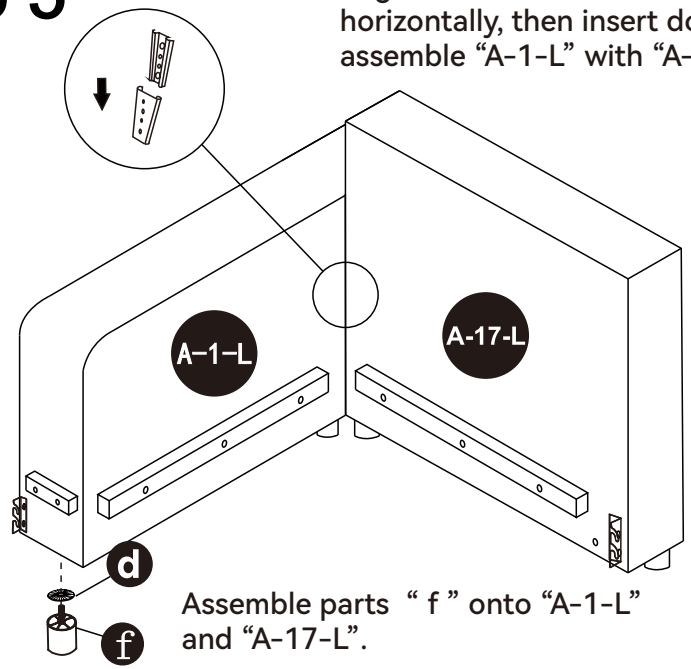

Assemble parts “ f ” onto “A-1-L” and “A-17-L”.

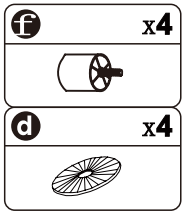

step 6

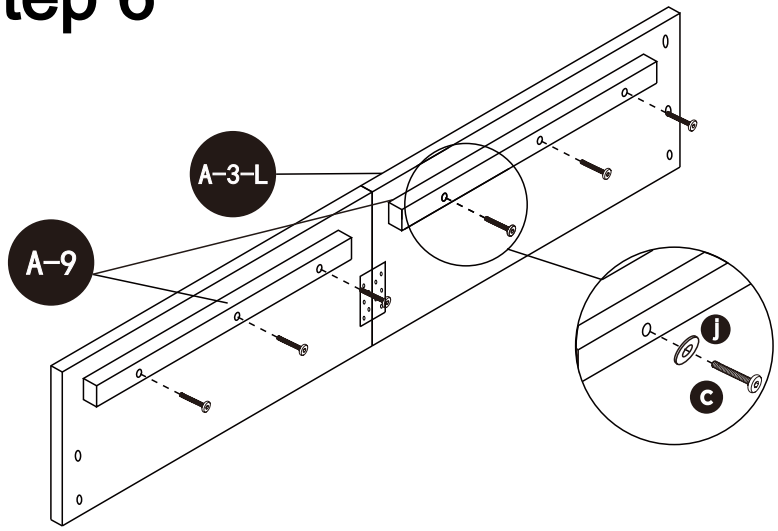

Assemble “A-9” onto “A-3-L” using “c+j”. First tighten the screws to 70%, then fully tighten them.

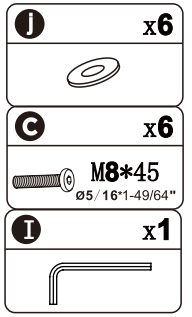

step 7

Assemble part “a” onto “A-3-L” (tighten screws to 50%)

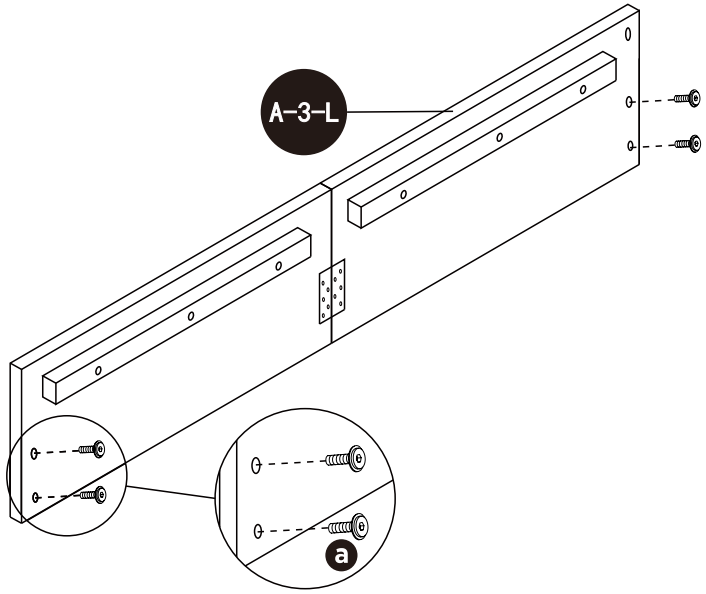

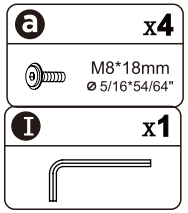

step 8

Assemble part “A-10” onto “A-4” using “c+j”. First tighten the screws to 70%, then fully tighten them.

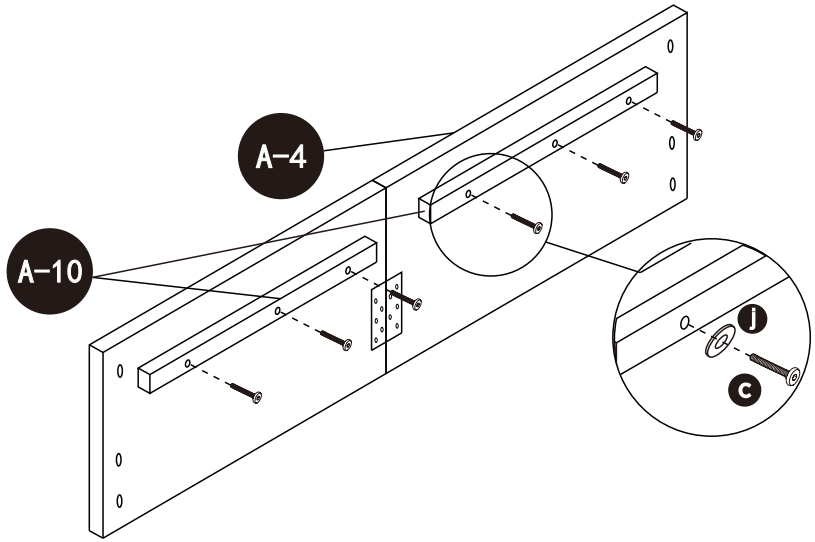

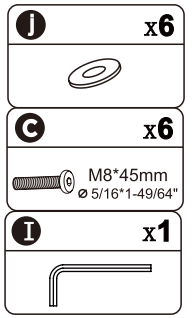

step 9

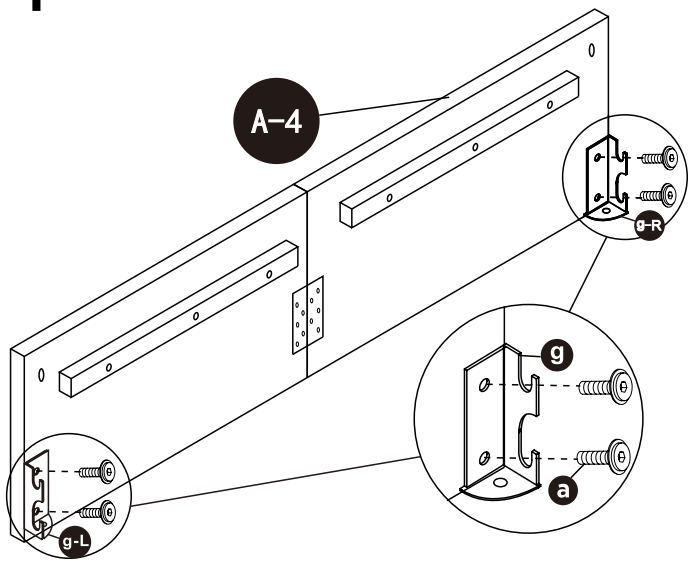

Assemble part “g” onto “A-4” using part “a”, First tighten the screws to 70%, then fully tighten them.

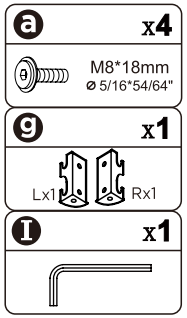

step 10

Assemble part “a” onto “A-5-L” (tighten the screws to 50%)

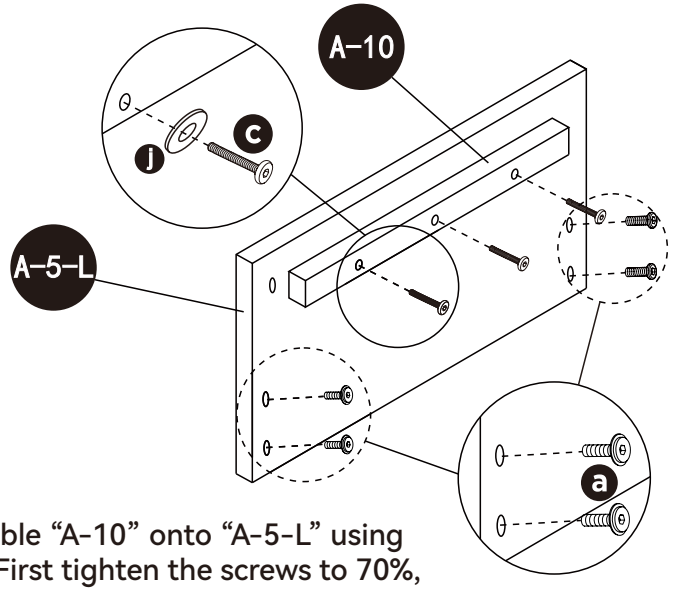

Assemble “A-10” onto “A-5-L” using “c+j”. First tighten the screws to 70%, then fully tighten them.

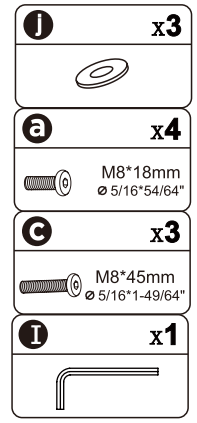

step 11

Hang “A-5-L” onto “A-4”, and after hanging, fully tighten all screws.

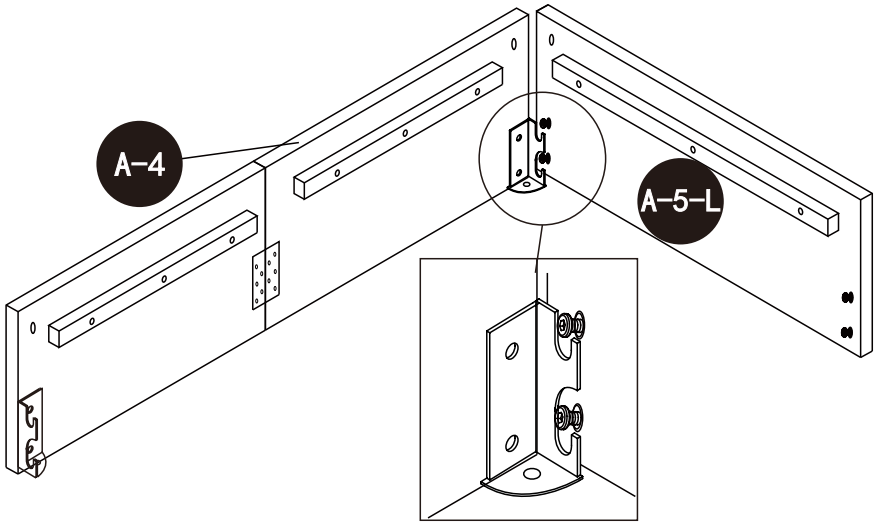

step 12

Use screw “a” to assemble part “e” at the connection between “A-4” and “A-5-L”, then fully tighten all screws.

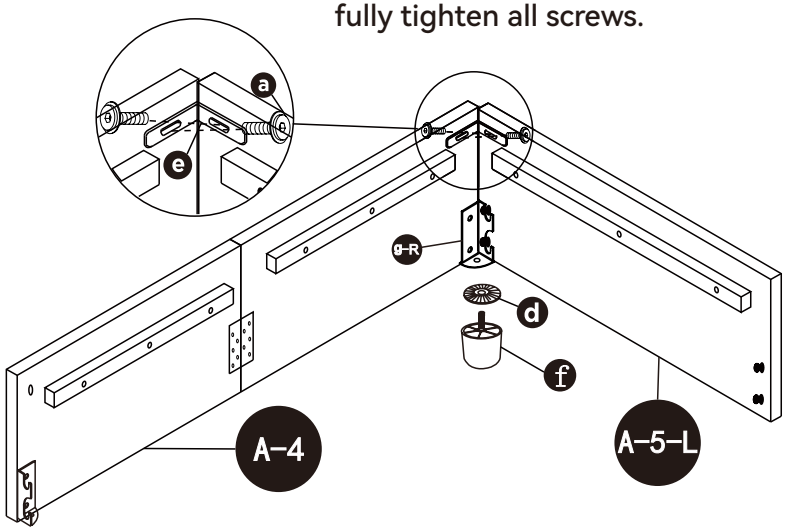

Assemble parts “ f ” onto “g-R”.

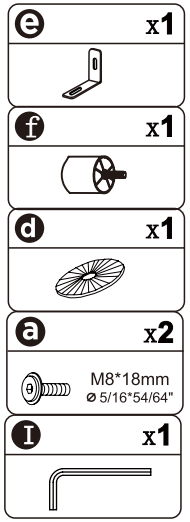

step 13

Hang “A-3-L” onto “A-4” and “A-5-L”. After hanging it in place, fully tighten all screws.

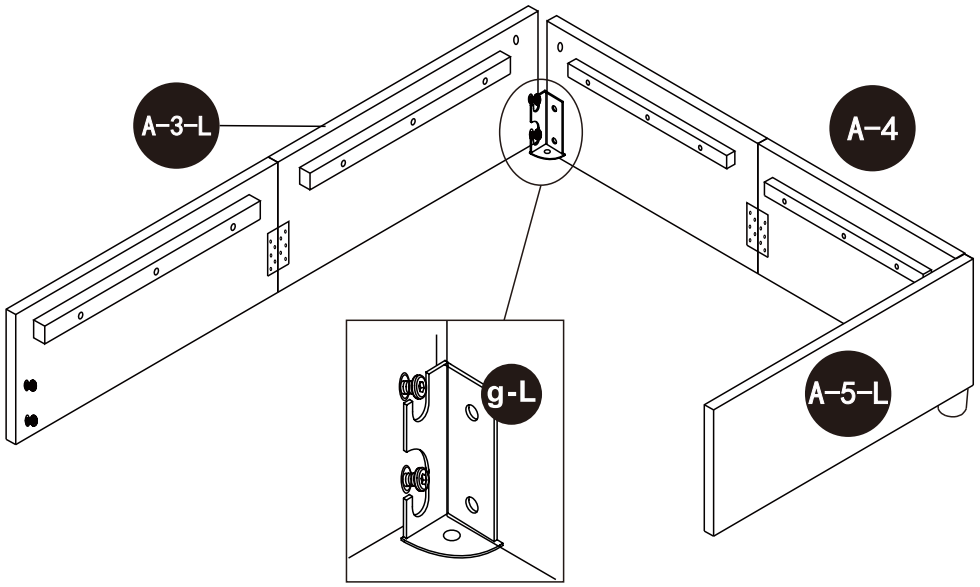

step 14

Use screw “a” to assemble part “e” at the connection between “A-4” and “A-3-L”, then fully tighten all screws.

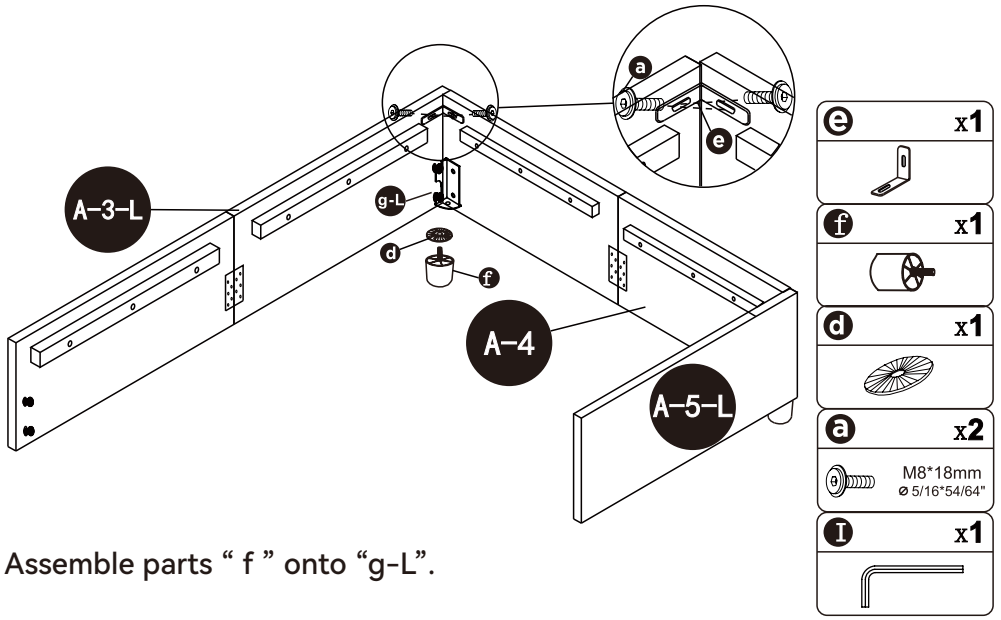

Assemble parts “ f ” onto “g-L”.

step 15

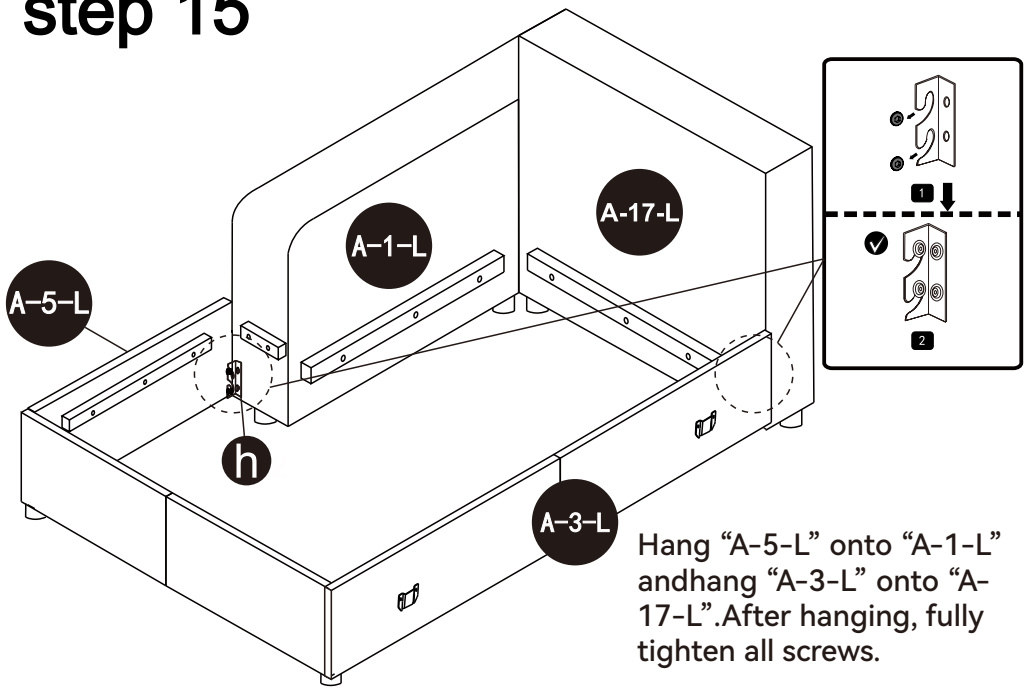

Hang “A-5-L” onto “A-1-L” andhang “A-3-L” onto “A-17-L”.After hanging, fully tighten all screws.

step 16

Place “A-6” onto “A-12” and “A-10”, ensuring it is positioned evenly and balanced.

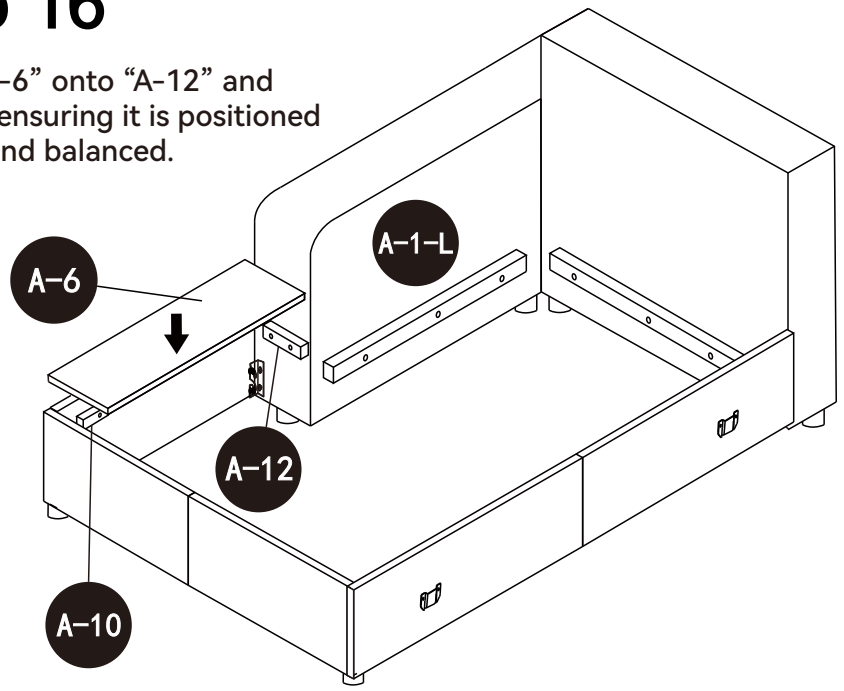

step 17

Place “A-2” into the frame, and finally fit “A-18-L” over it.

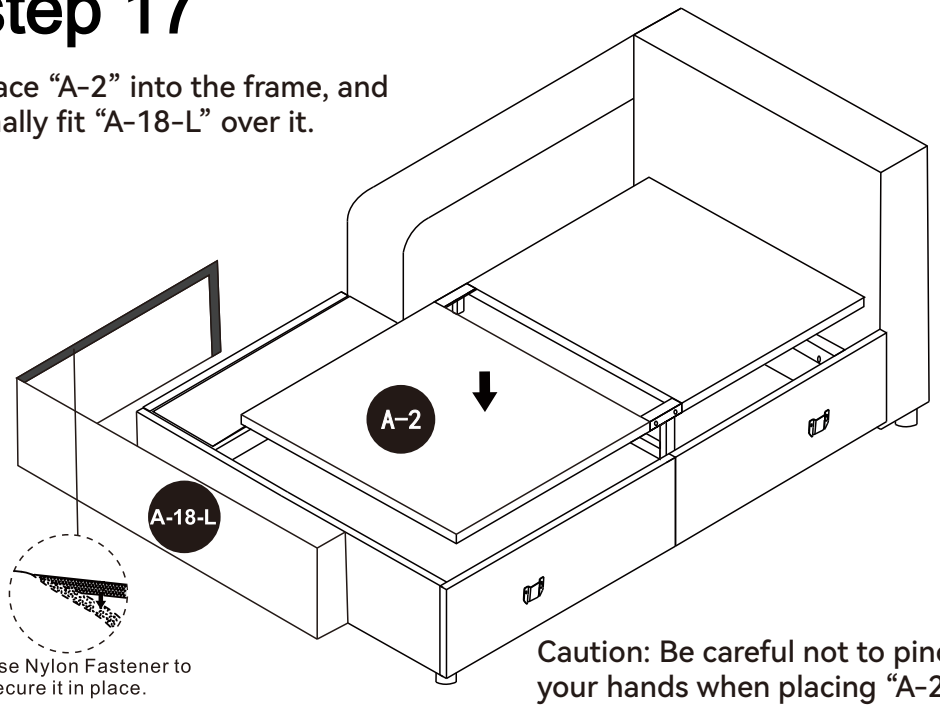

Use Nylon Fastener to secure it in place.

Caution: Be careful not to pinch your hands when placing “A-2”.

step 18

Turn the seat frame over, align it with the holes,and secure it tightly using “c+j”.

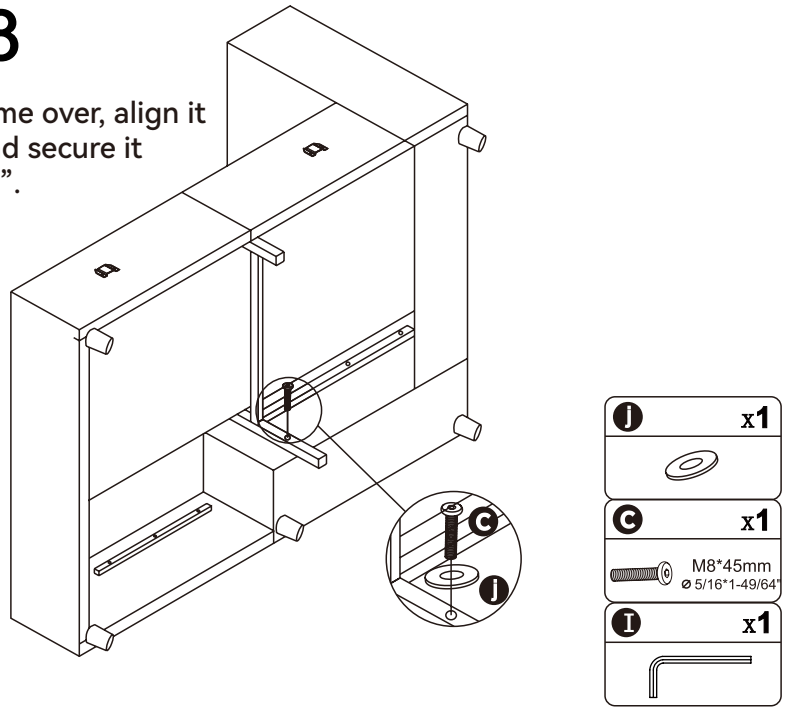

step 19

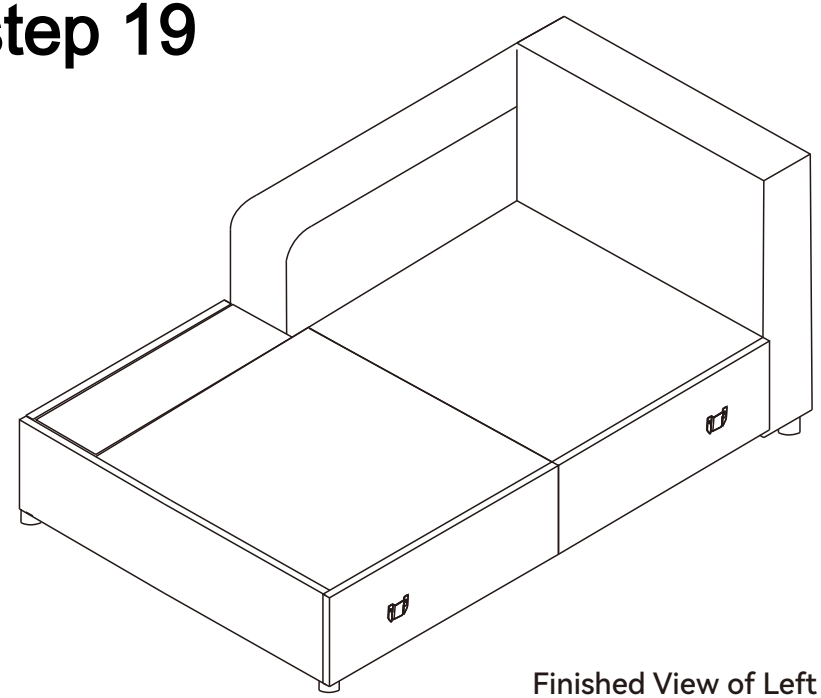

Finished View of Left Chaise

Exploded View of Right Chaise

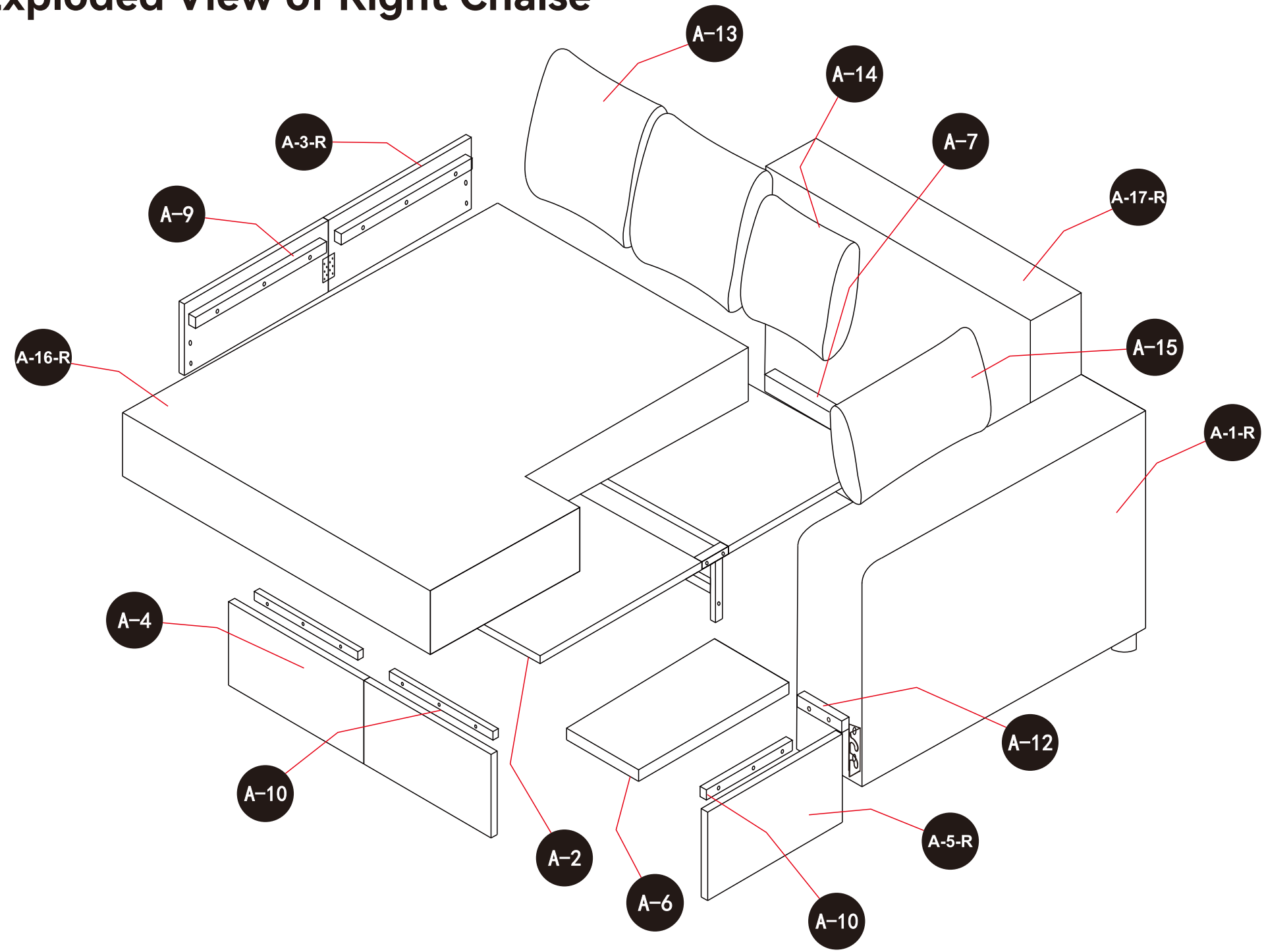

Main structure accessories

A-1-R

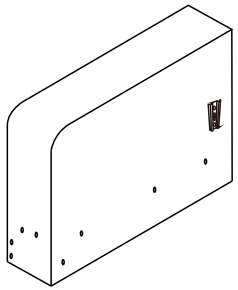

X1

A-2

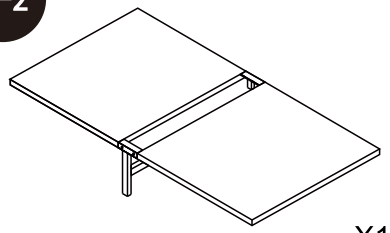

X1

A-3-R

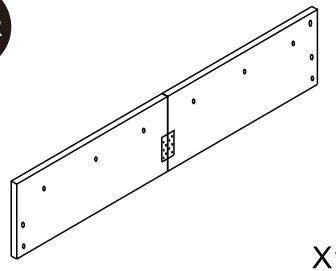

X1

A-4

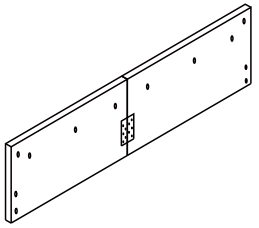

X1

A-5-R

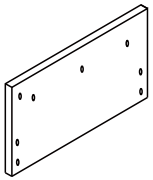

X1

A-6

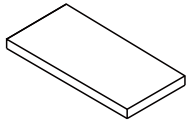

X1

A-7

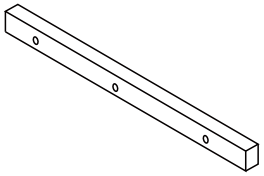

X2

A-9

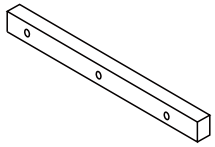

X2

A-10

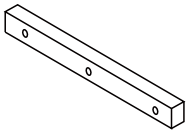

X3

A-12

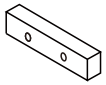

X1

A-13

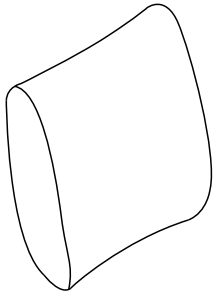

X2

A-14

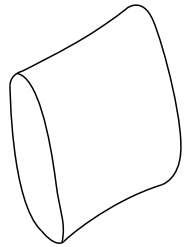

X1

A-15

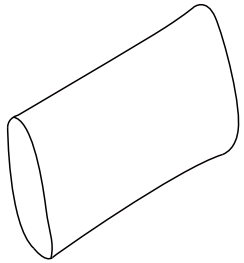

X1

A-16-R

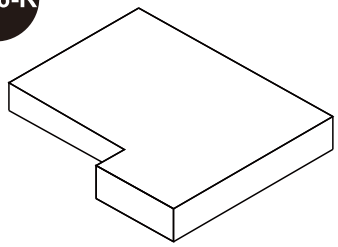

X1

Main structure accessories

A-17-R

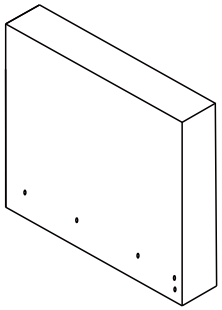

x1

A-18-R

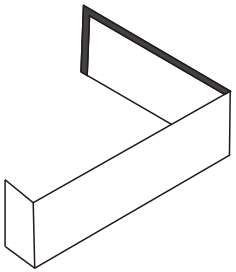

Hardware parts

a

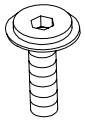

M8*18mm
⌀ 5/16*54/64"
x18

b

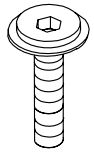

M8*30mm
⌀ 5/16*1-3/16"
x2

c

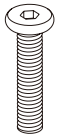

M8*45mm
⌀ 5/16*1-49/64"
x24

d

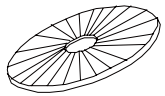

x6

e

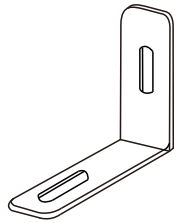

x2

f

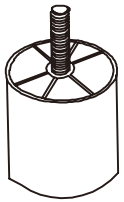

x6

g

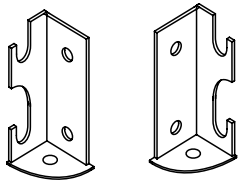

Lx1 Rx1
x1

h

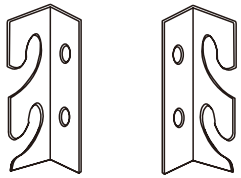

Lx1 Rx1
x1

I

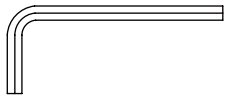

x1

j



M8*⌀22*1.5mm
x24

step 1

1. Use “c+j” to assemble “A-12” onto “A-1-R”. First tighten the screws to 70%,then fully tighten them.
2. Use “c+j” to assemble “A-7” onto “A-1-R”. First tighten the screws to 70%,then fully tighten them.

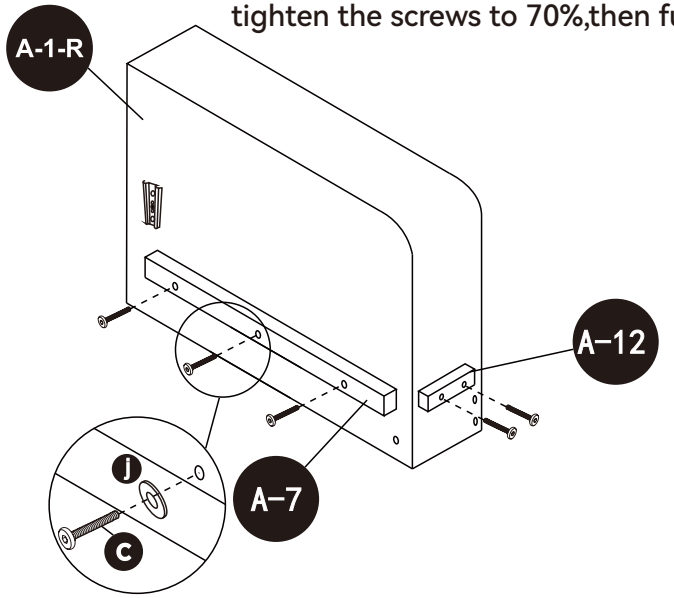

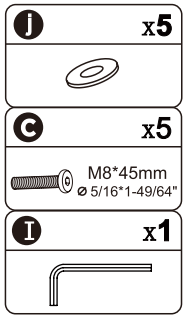

step 2

Use “b” to assemble “h-L” onto “A-1-R”, then tighten it securely.

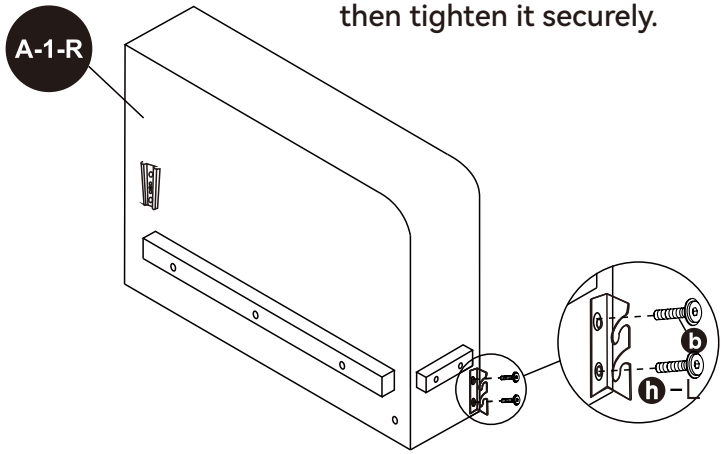

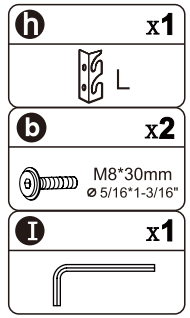

step 3

Use “c+j” to assemble“A-7”onto “A-17-R”. First tighten the screws to70%, then fully tighten them.

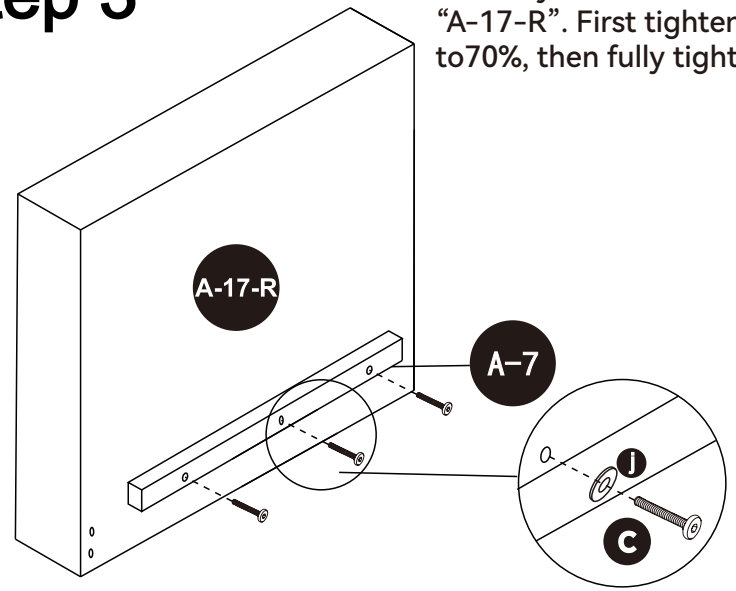

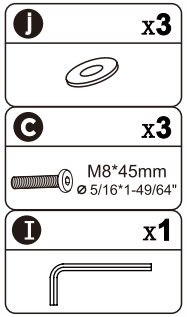

step 4

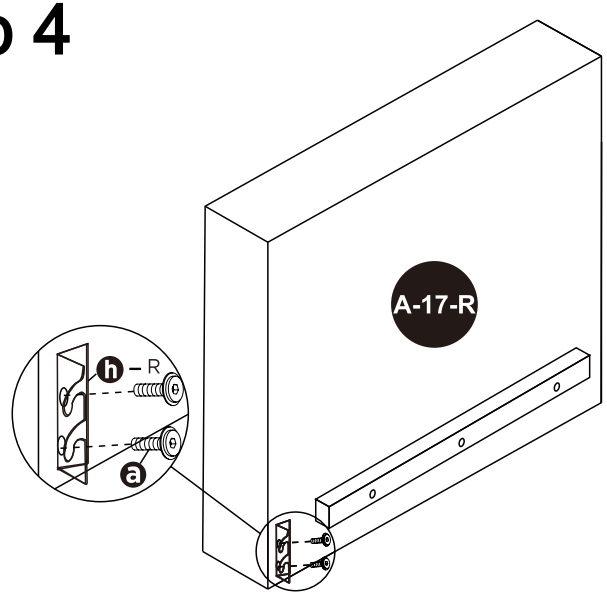

Use “a” to assemble “h-R”onto “ A-17-R ”,then fully tighten them.

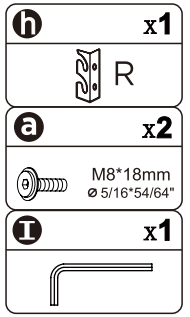

step 5

Align the male and female connectors horizontally, then insert downward to assemble “A-1-R” with “A-17-R”.

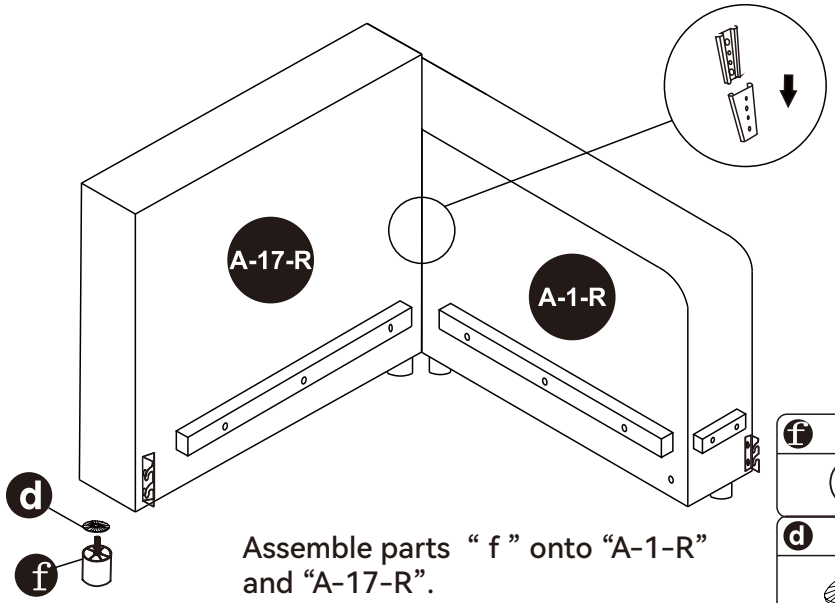

Assemble parts “ f ” onto “A-1-R” and “A-17-R”.

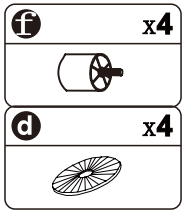

step 6

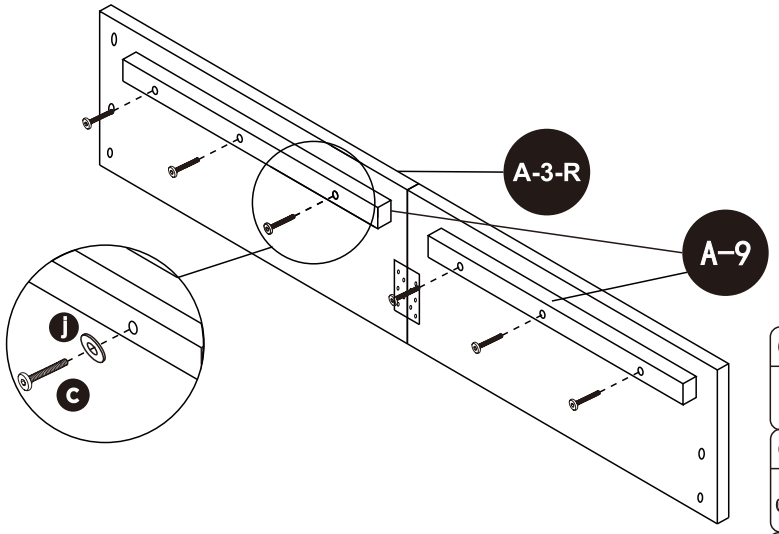

Assemble “A-9” onto “A-3-R” using “c+j”. First tighten the screws to 70%, then fully tighten them.

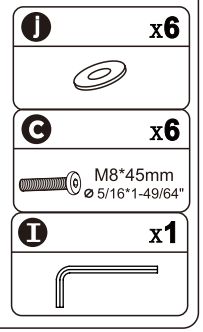

step 7

Assemble part “a” onto “A-3-R” (tighten screws to 50%)

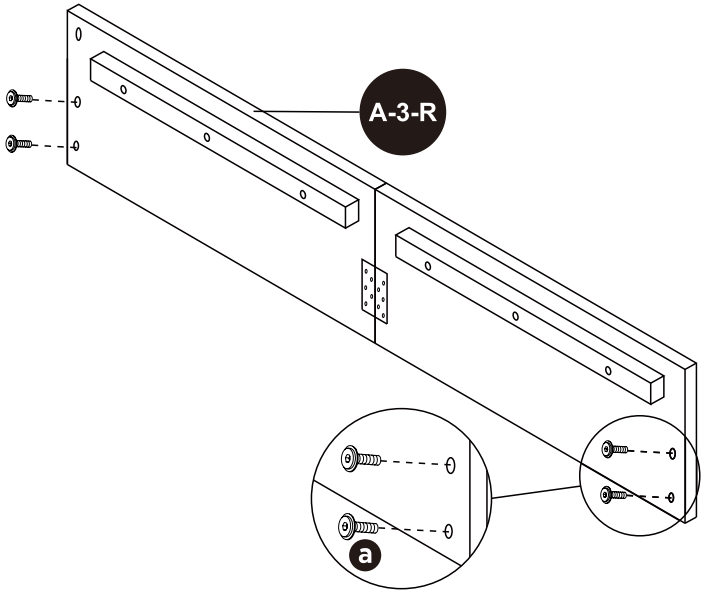

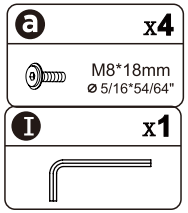

step 8

Assemble part “A-10” onto “A-4” using “c+j”. First tighten the screws to 70%, then fully tighten them.

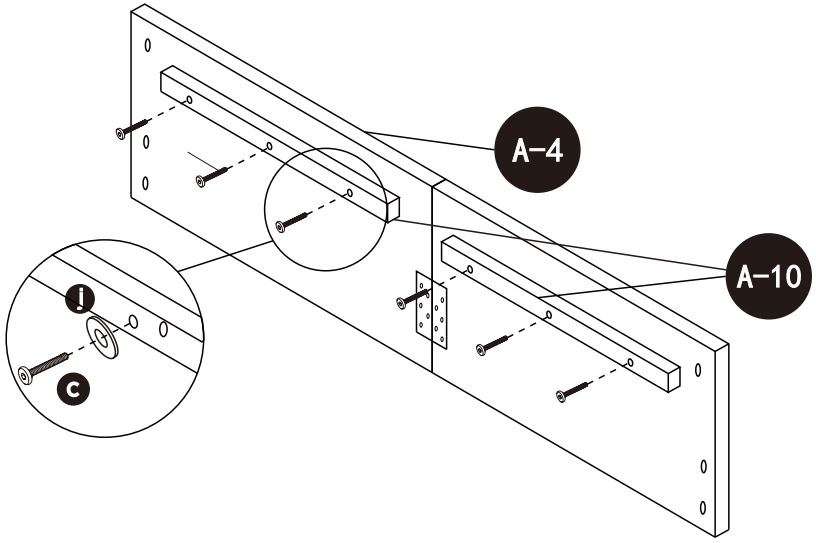

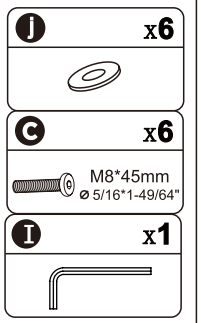

step 9

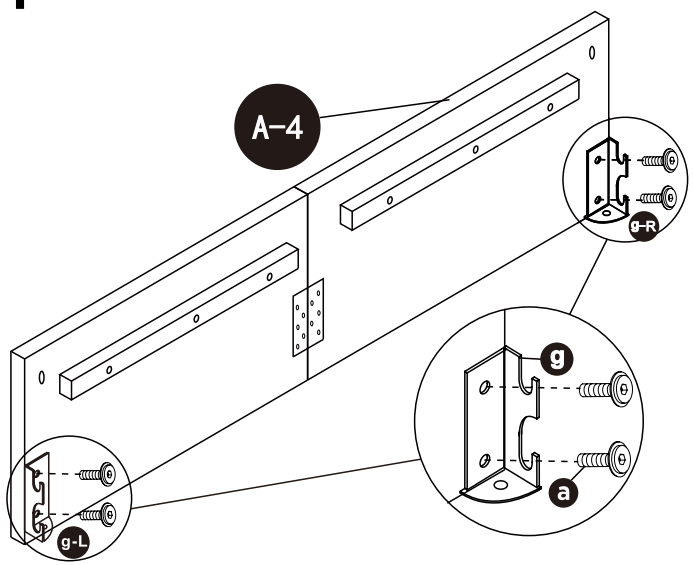

Assemble part “g” onto “A-4” using part “a”, First tighten the screws to 70%, then fully tighten them.

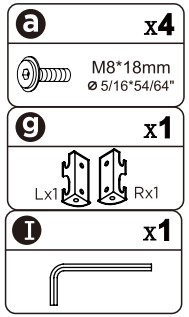

step 10

Assemble “A-10” onto “A-5-R” using “c+j”. First tighten the screws to 70%, then fully tighten them.

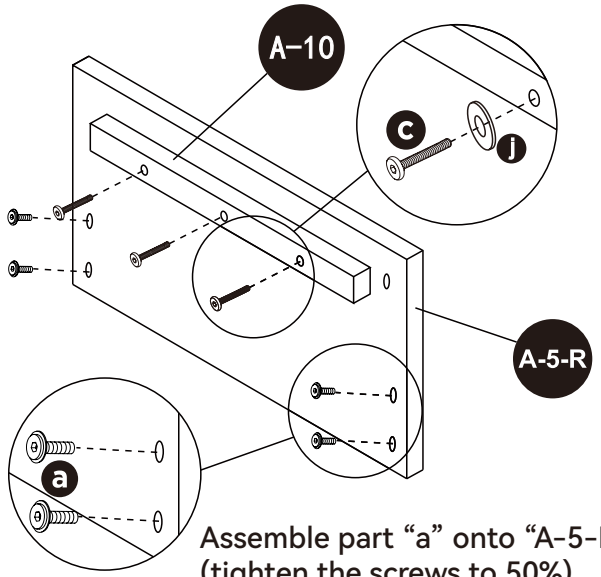

Assemble part “a” onto “A-5-R” (tighten the screws to 50%)

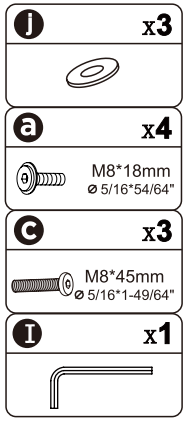

step 11

Hang “A-5-R” onto “A-4”, and after hanging, fully tighten all screws.

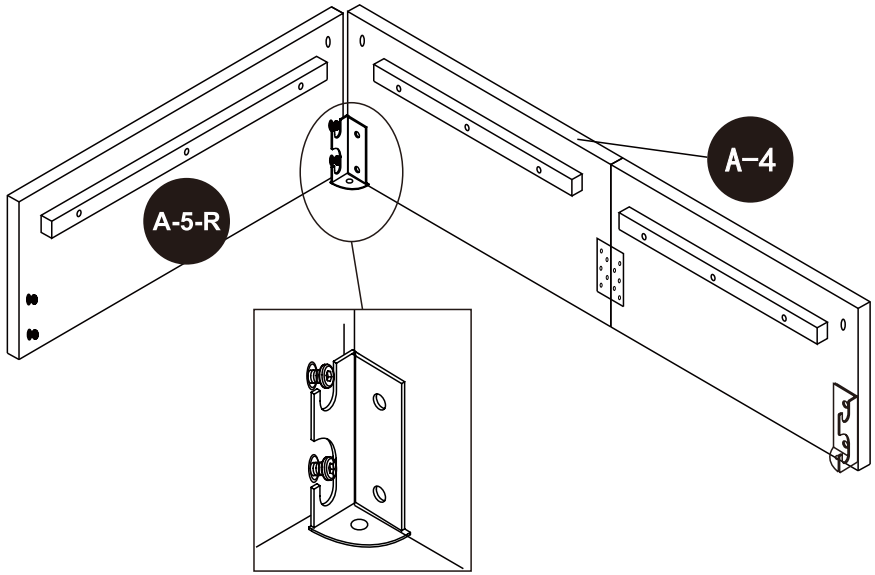

step 12

Use screw “a” to assemble part “e” at the connection between “A-4” and “A-5-R”, then fully tighten all screws.

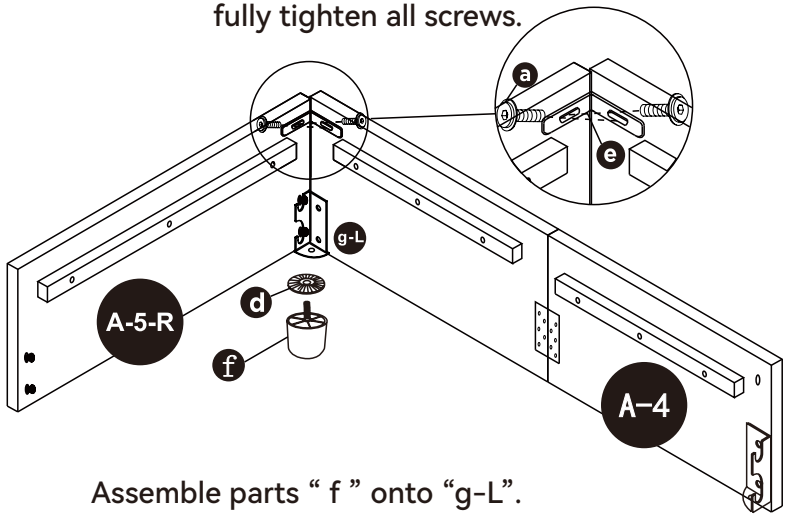

Assemble parts “ f ” onto “g-L”.

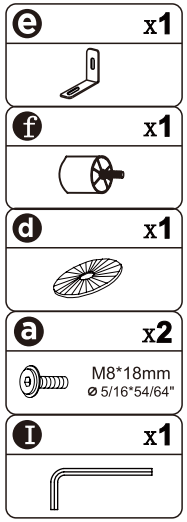

step 13

Hang “A-3-R” onto “A-4” and “A-5-R”. After hanging it in place, fully tighten all screws.

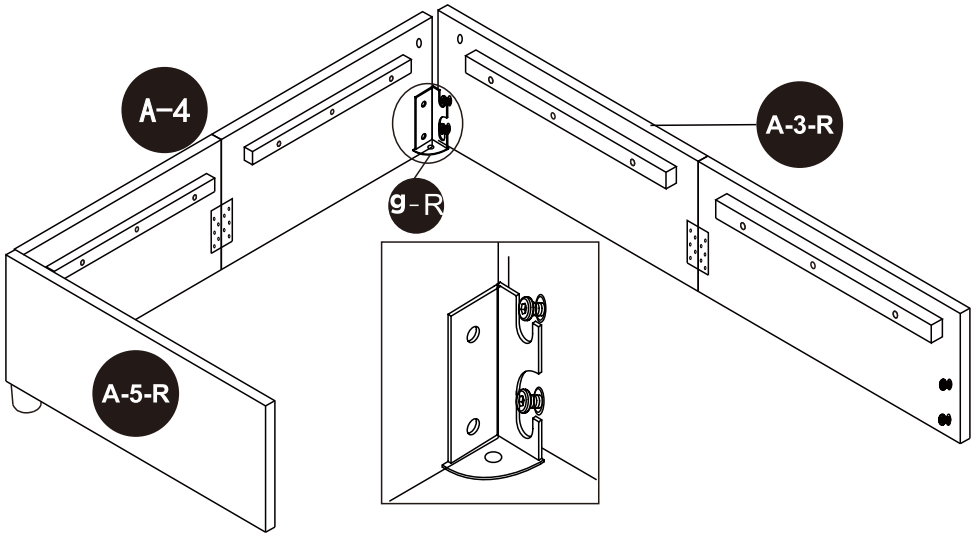

step 14

Use screw “a” to assemble part “e” at the connection between “A-4” and “A-3-L”, then fully tighten all screws.

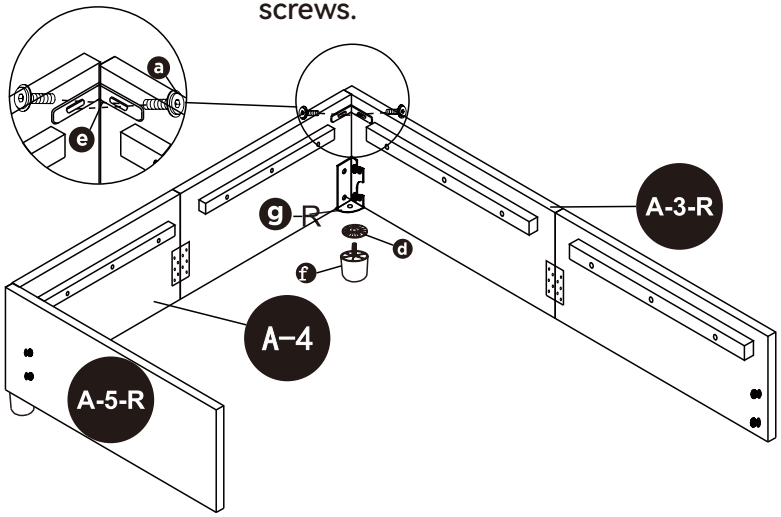

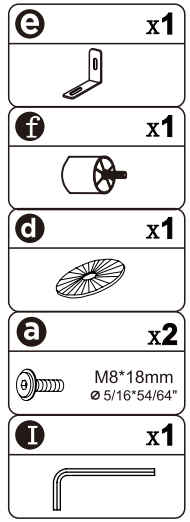

Assemble parts “ f ” onto “g-R”.

step 15

Hang “A-5-R” onto “A-1-R” andhang “A-3-R” onto “A-17-R”.After hanging, fully tighten all screws.

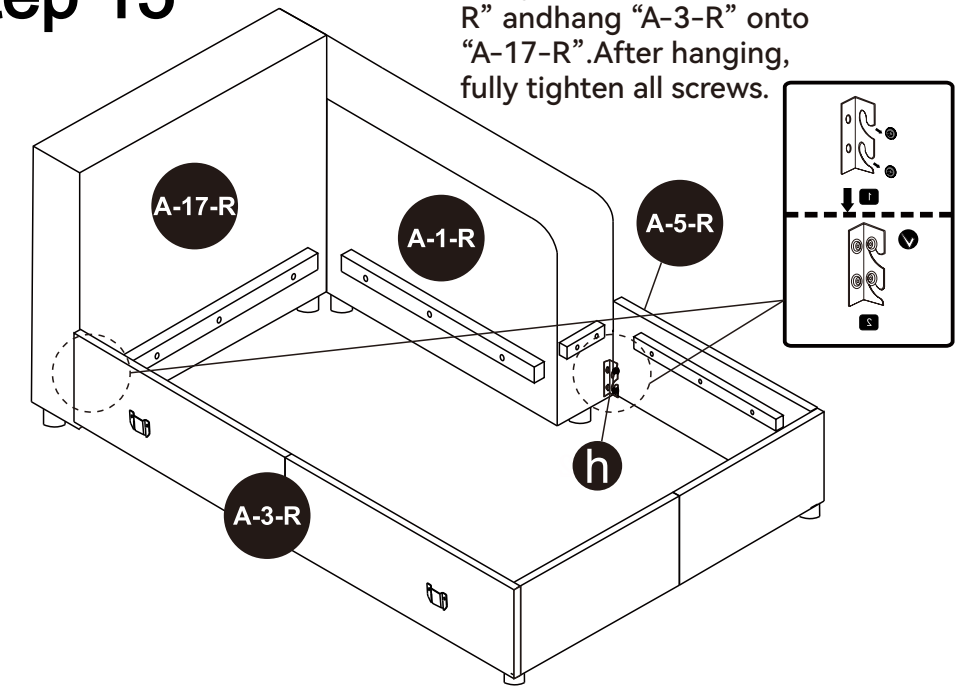

step 16

Place “A-6” onto “A-12” and “A-10”, ensuring it is positioned evenly and balanced.

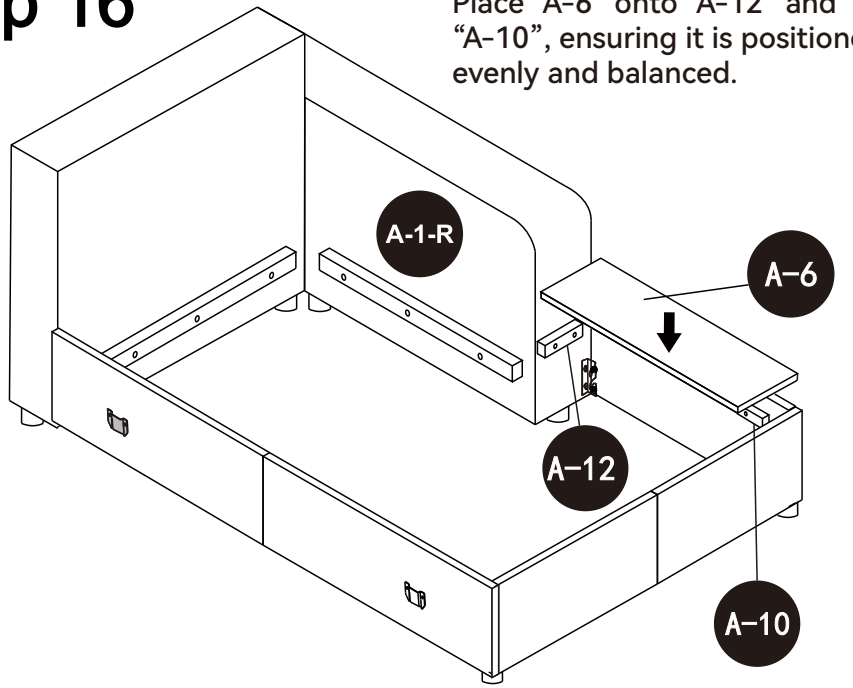

step 17

Place “A-2” into the frame, and finally fit “A-18-R” over it.

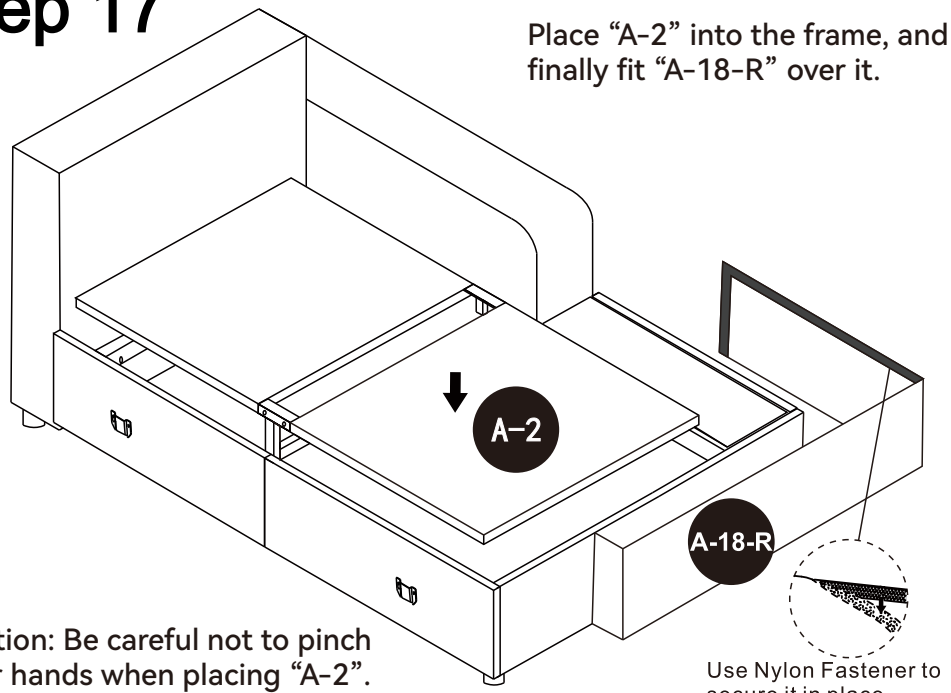

Caution: Be careful not to pinch your hands when placing “A-2”.

Use Nylon Fastener to secure it in place.

step 18

Turn the seat frame over, align it with the holes,and secure it tightly using “c+j”.

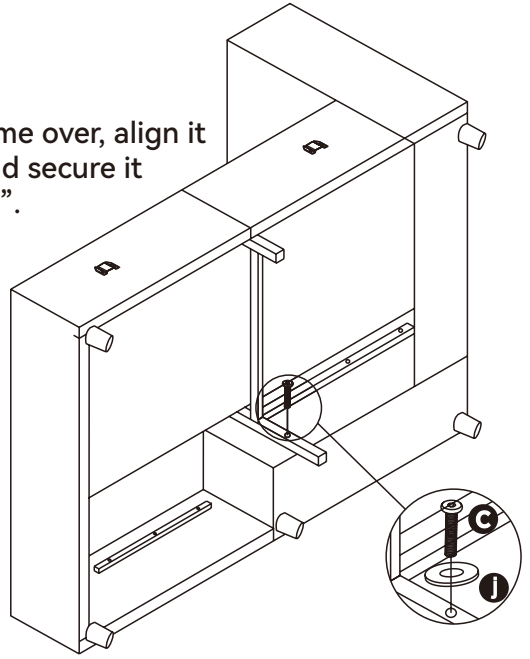

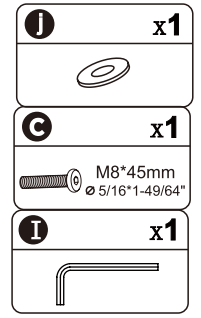

step 19

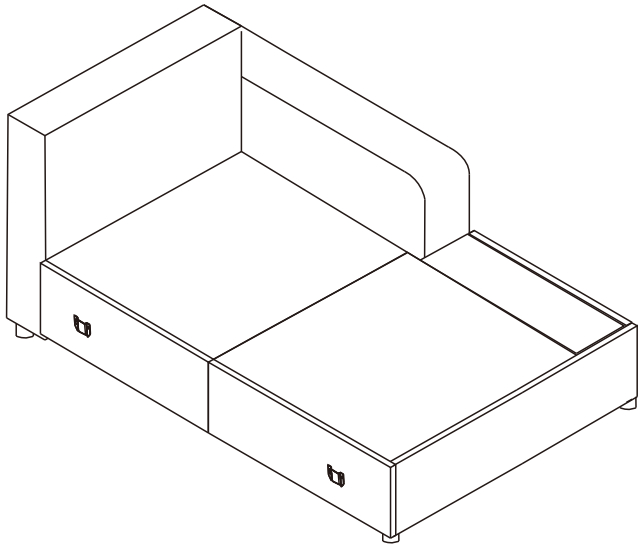

Finished View of Right Chaise

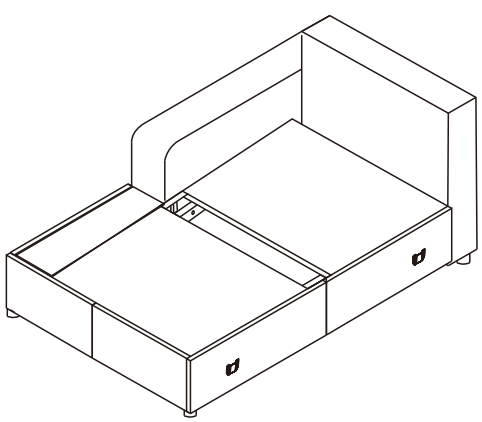

Assemble the complete Left Chaise

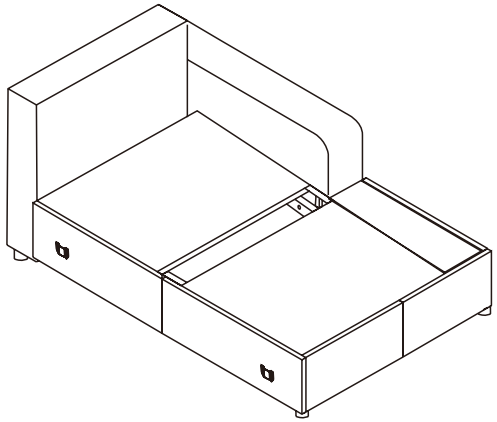

Assemble the complete Right Chaise

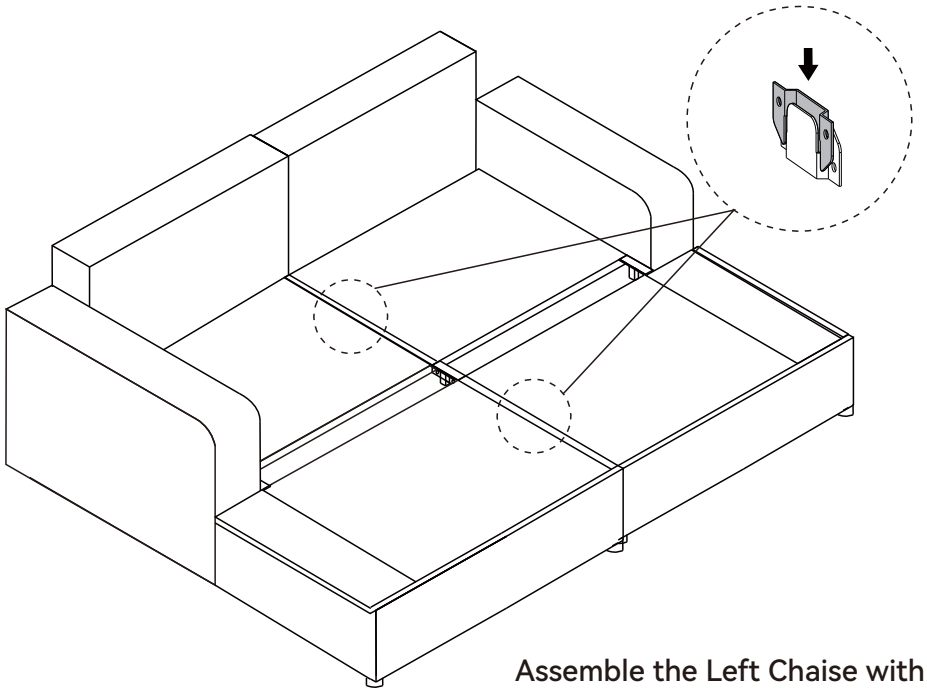

Assemble the Left Chaise with the Right Chaise.

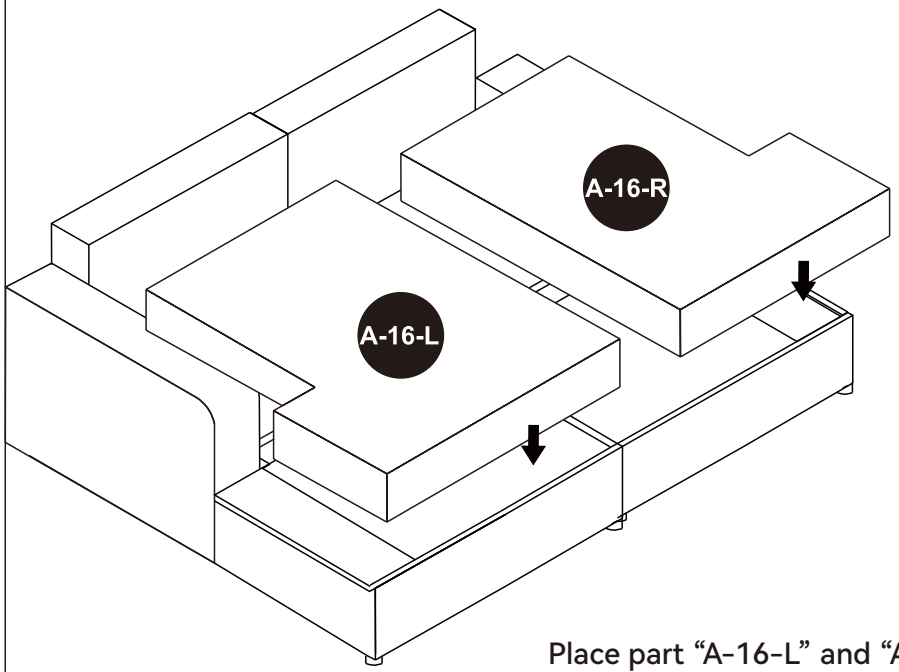

Place part “A-16-L” and “A-16-R” .

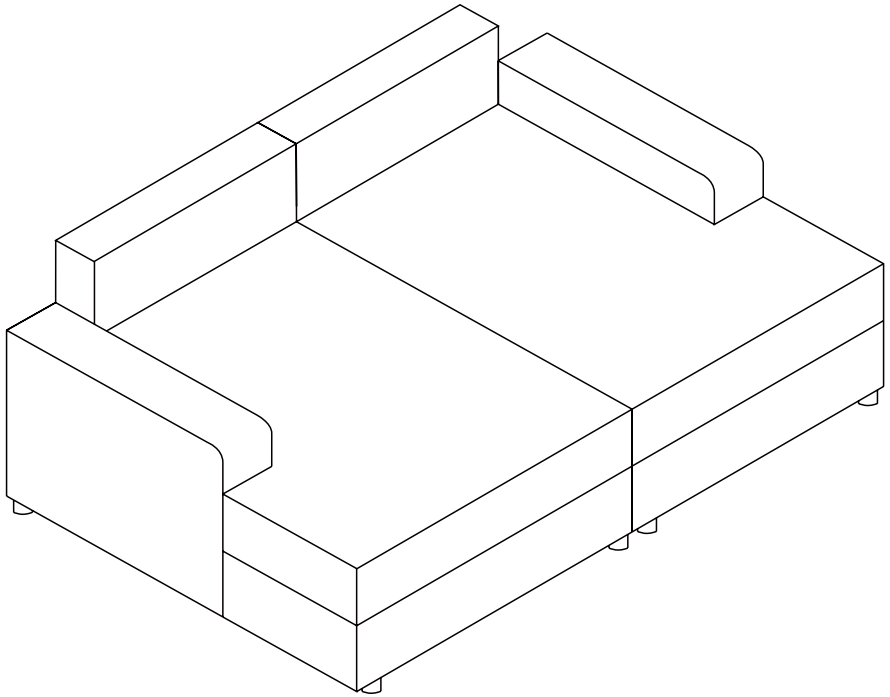

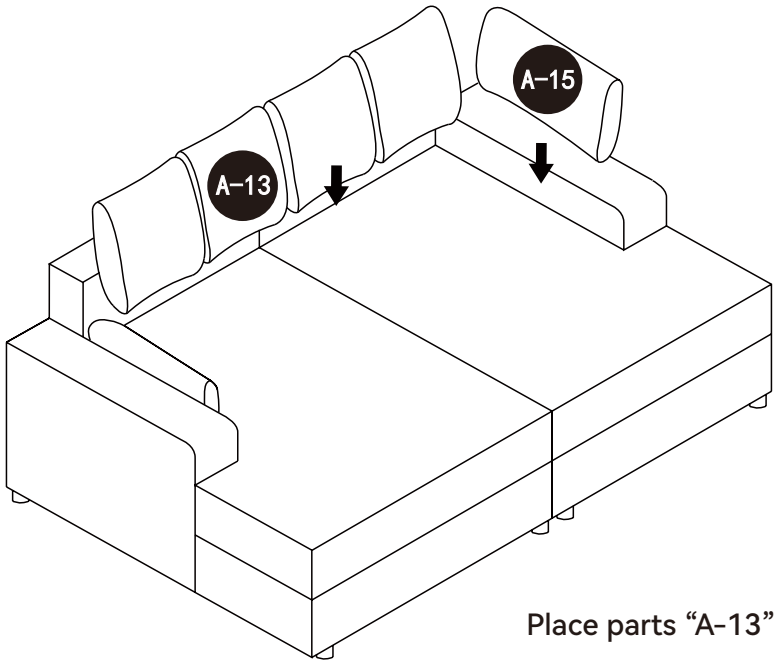

Place parts “A-13” and “A-15”.

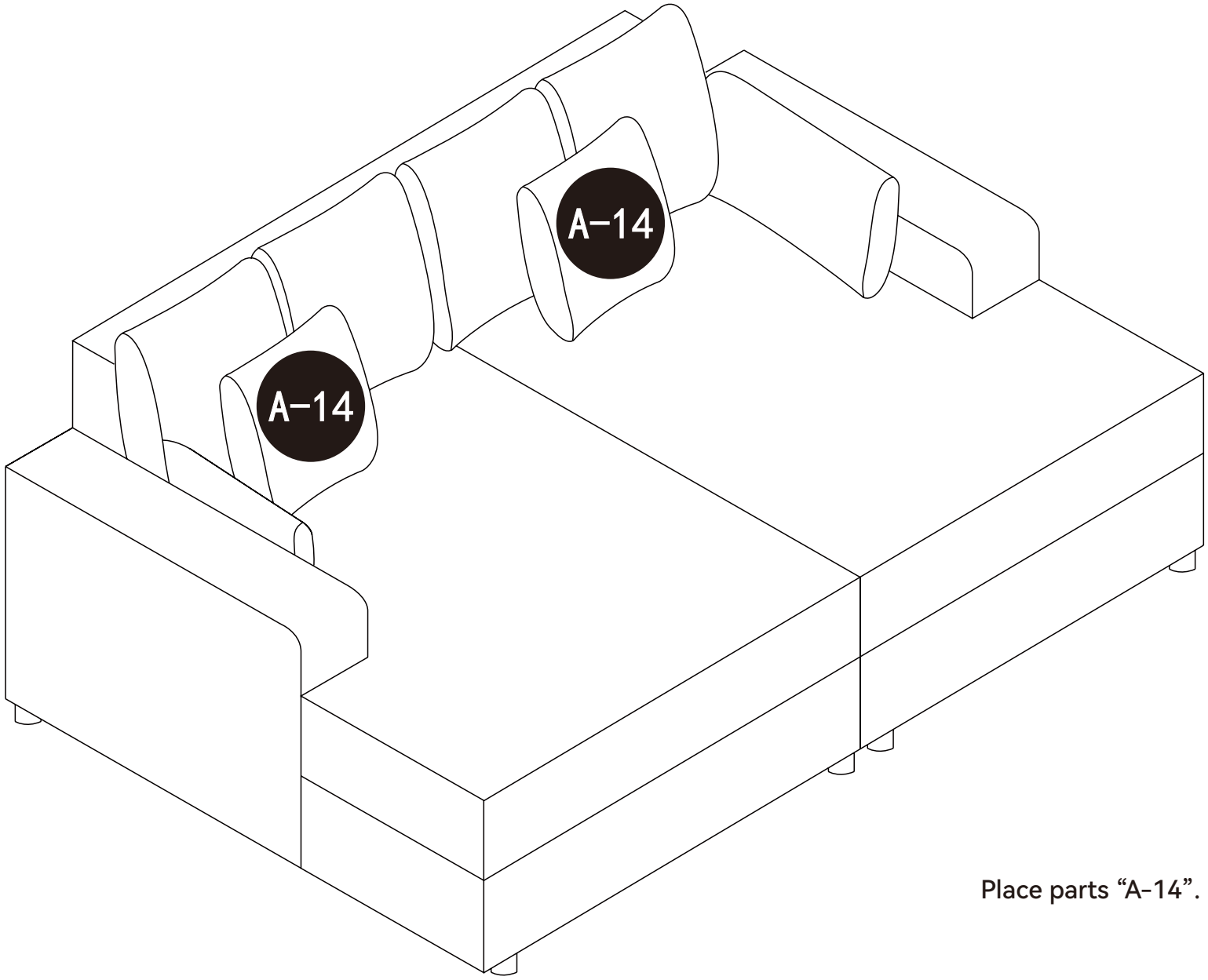

Place parts “A-14”.

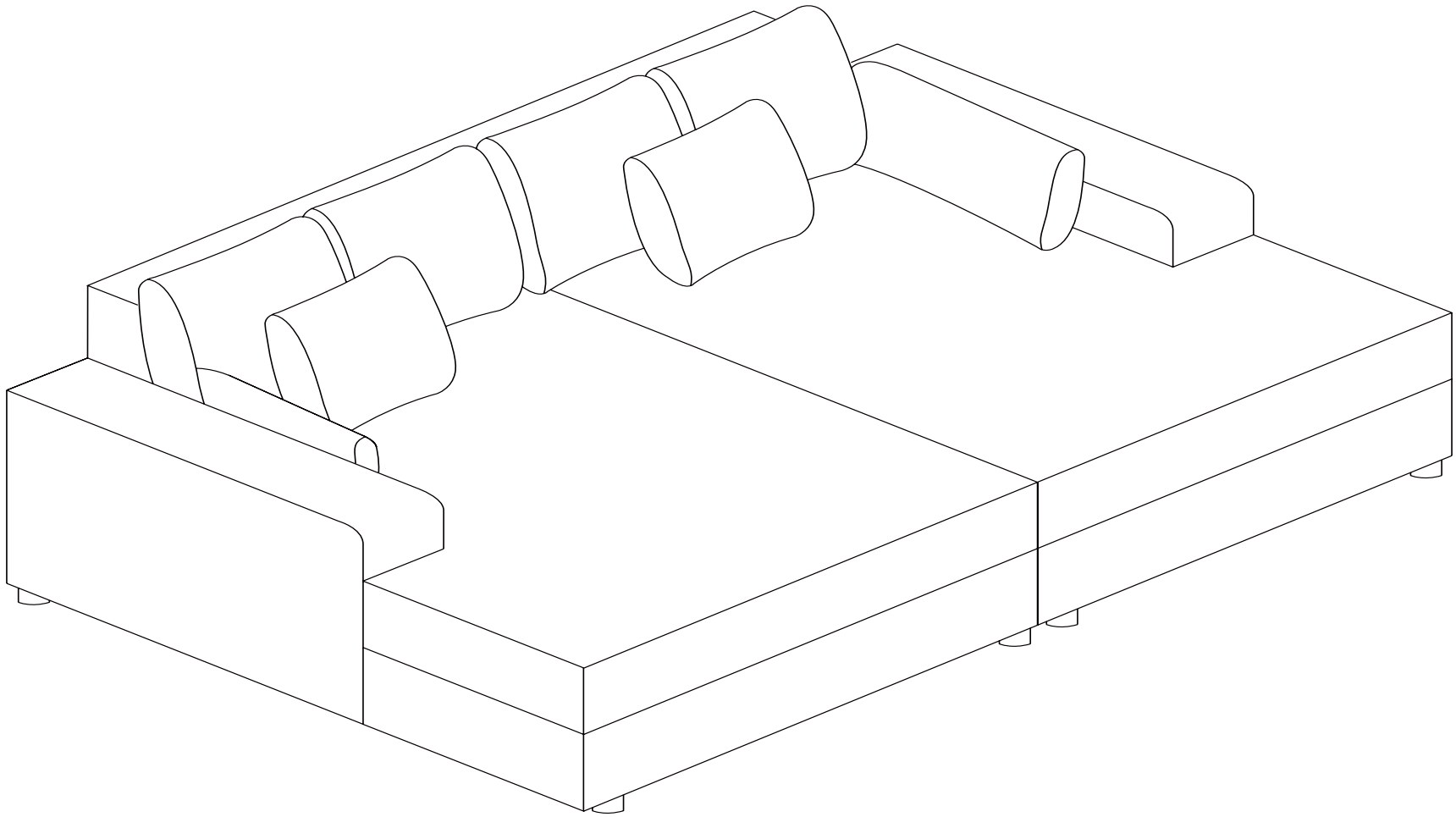

1. Keep a gap of0.5-1 cm between the wall part of the sofa and the wall.
2. Avoid direct sunlight, preferably placed in a place that can avoid sunlight, or use translucent tulle curtains to block the sun3. Vacuum at least once a week, paying particular attention to removing dust accumulation between fabric structures.
3. Sofa cushions are turned over once a week to evenly distribute wear.
4. If stained, use a clean cloth dipped in water to wipe, in order to avoid leaving marks, it is best to wipe from the periphery of the stain. Velvet furniture should not be dipped in water, should use dry cleaning agent.
5. All cloth covers and bushings should be dry-cleaned, not washed, not bleached.
6. If you find loose thread, do not tear it with your hand, it is best to cut the thread neatly with scissors