Assembly Instruction

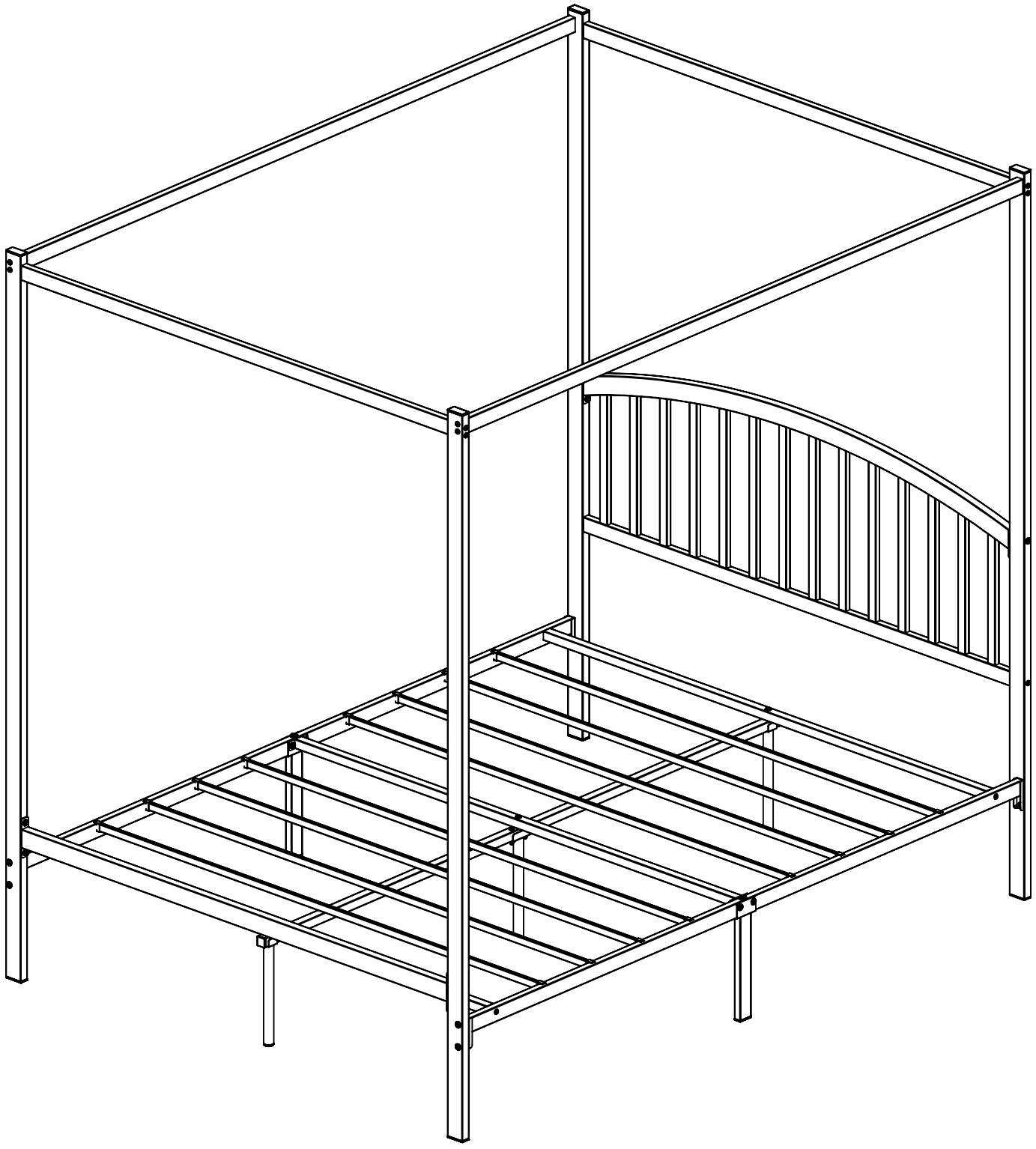

1 X2

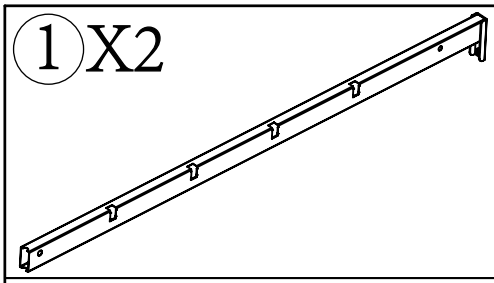

2 X2

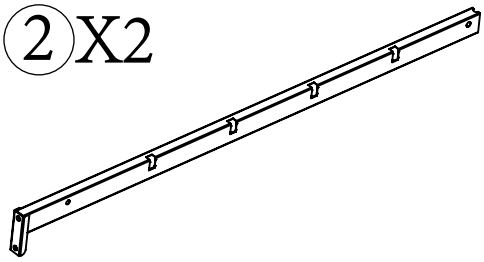

3 X1

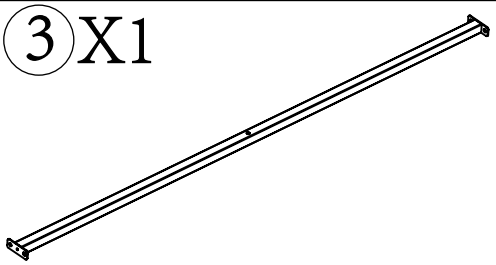

4 X2

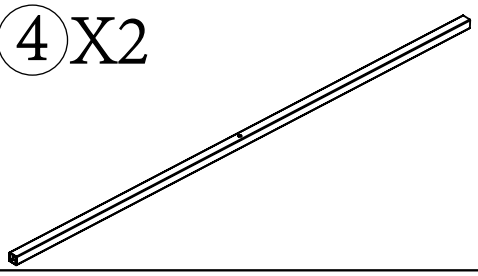

5 X2

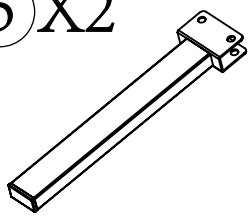

6 X1

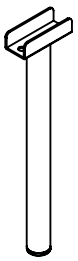

7 X2

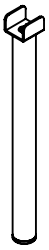

8 X2

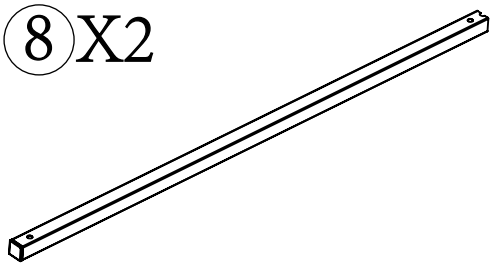

9 X8

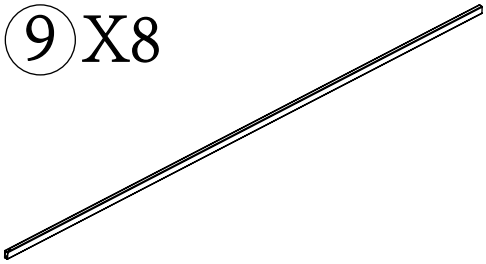

10 X1

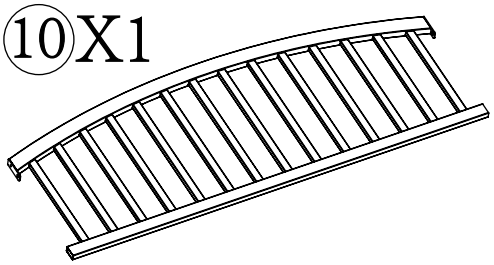

11 X2

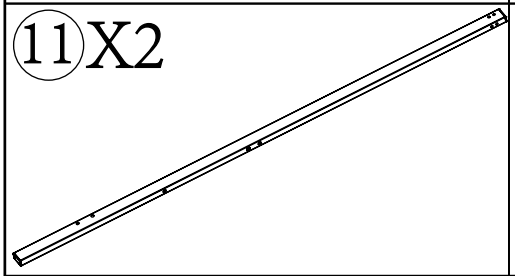

12 X2

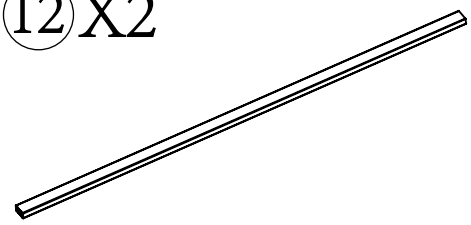

13 X2

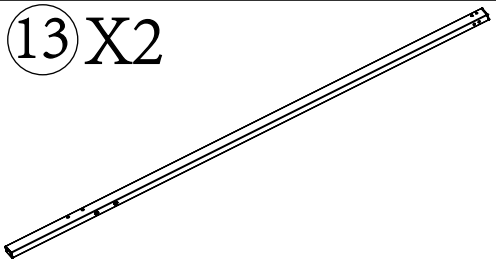

14 X1

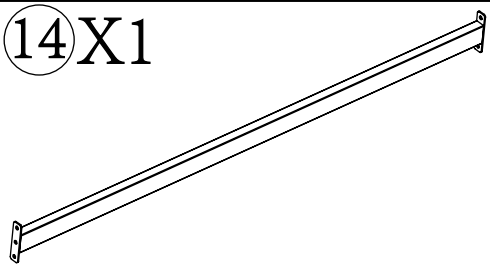

15 X2

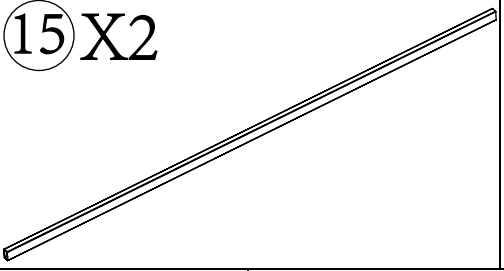

A X2

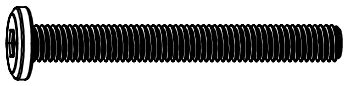

M8X70

B X2

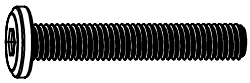

M8X50

C X8



M8X40

D X4

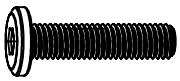

M8X35

E X6

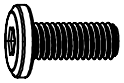

M8X20

F X10



M6X80

G X3



M6X70

H X8



M6X50

I X6



M6X40

J X4



M8

K X2



M6

L X12

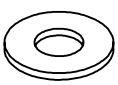

M8

M X7



M6

N X16

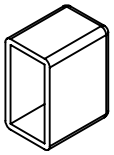

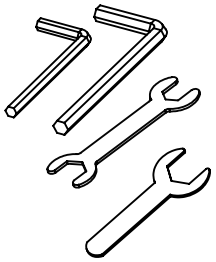

Difference screws display(1:1)

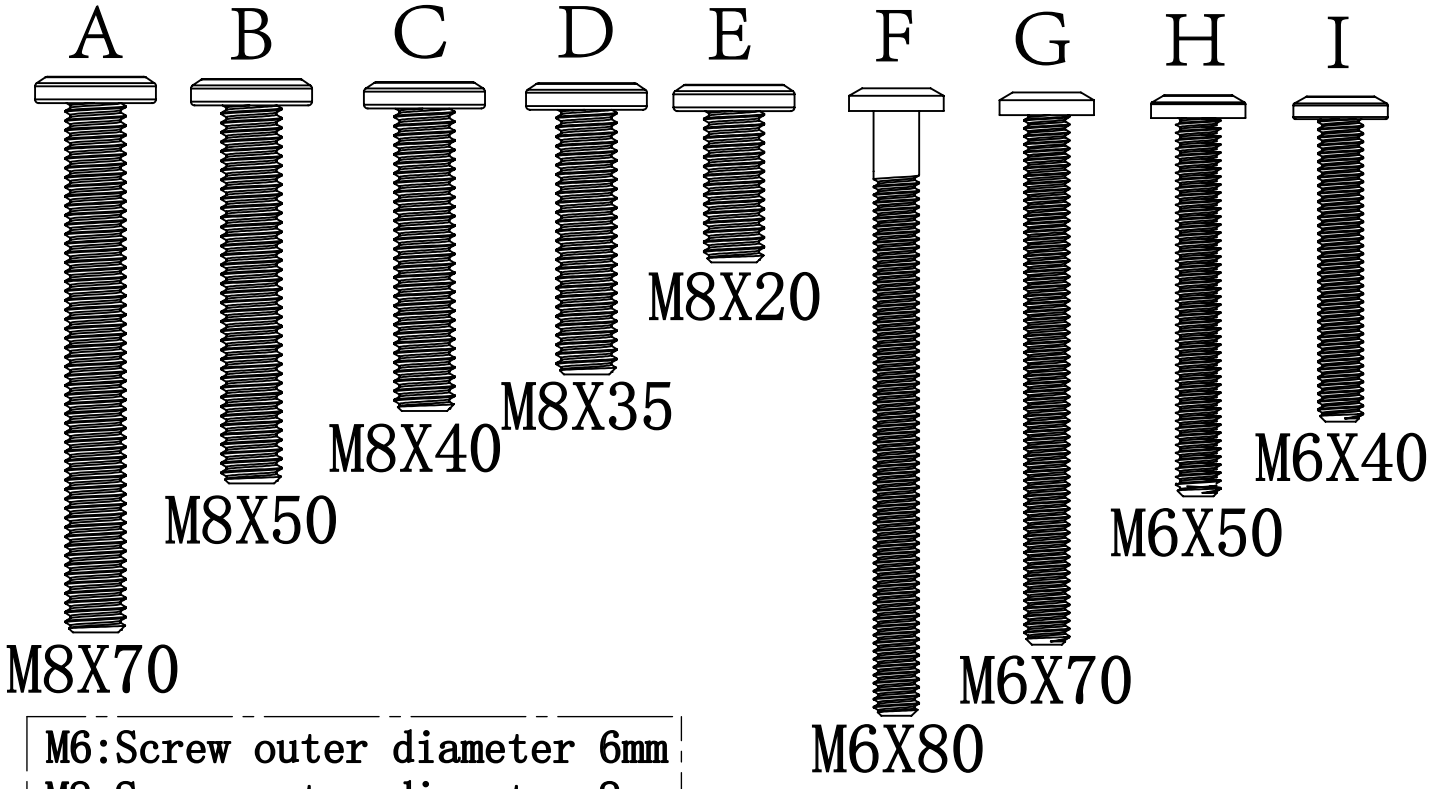

M6:Screw outer diameter 6mm
M8:Screw outer diameter 8mm

A	M8X70	2	F	M6X80	6
E	M8X20	2	L	M8	2
			M	M6	2

Step 1

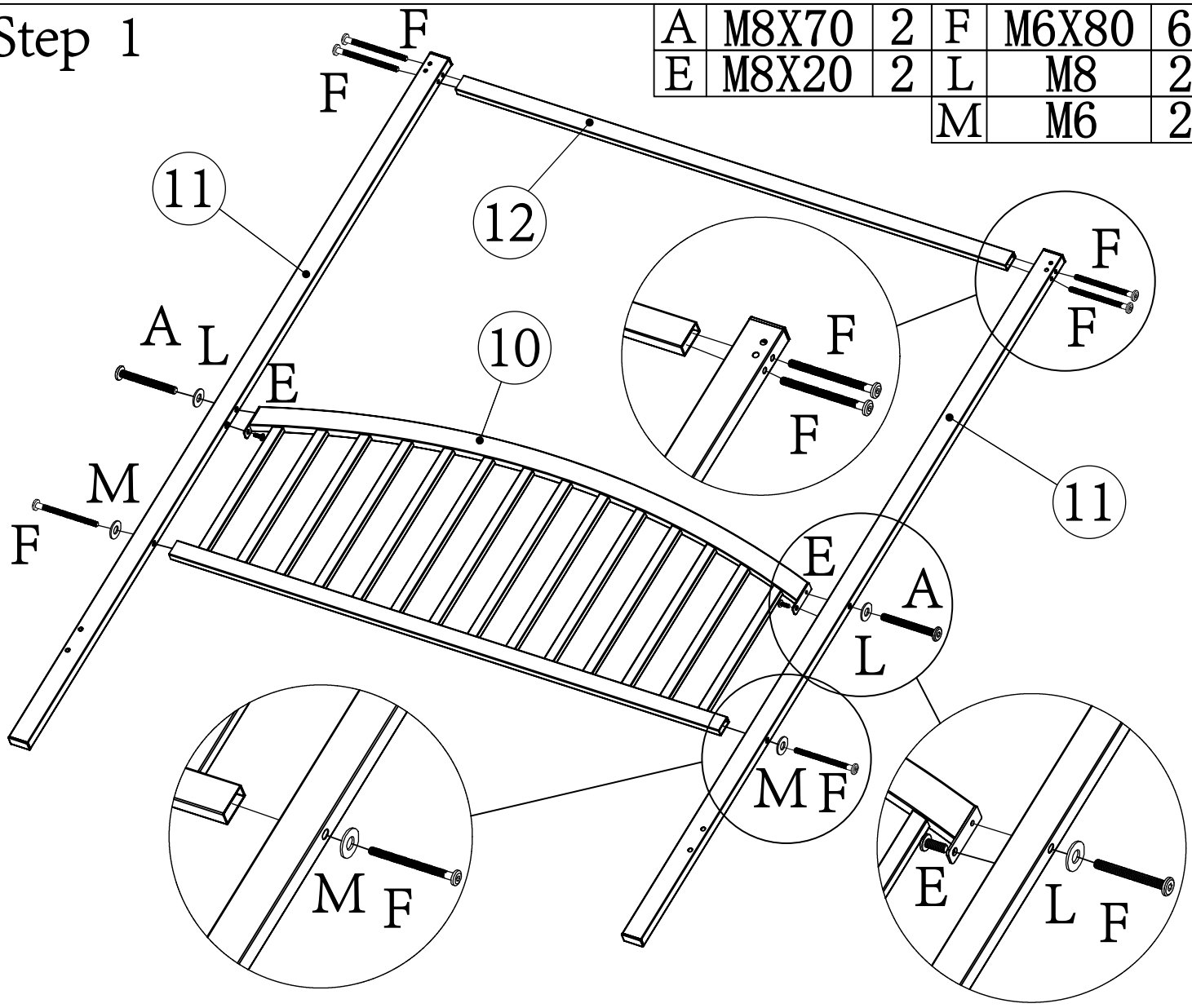

Step 2

E	M8X20	4
F	M6X80	4

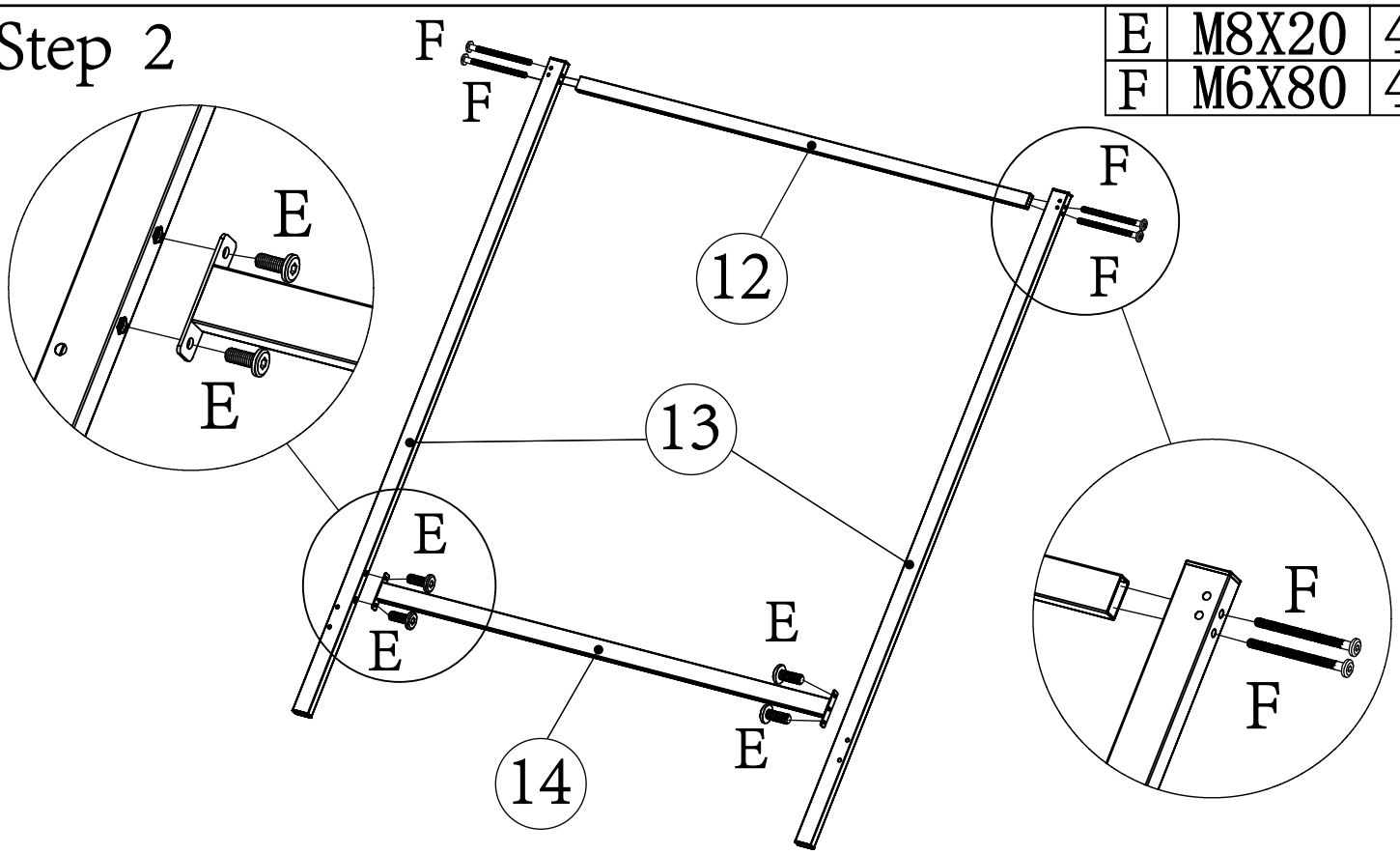

Step 3

I	M6X40	2
K	M6	2
M	M6	2

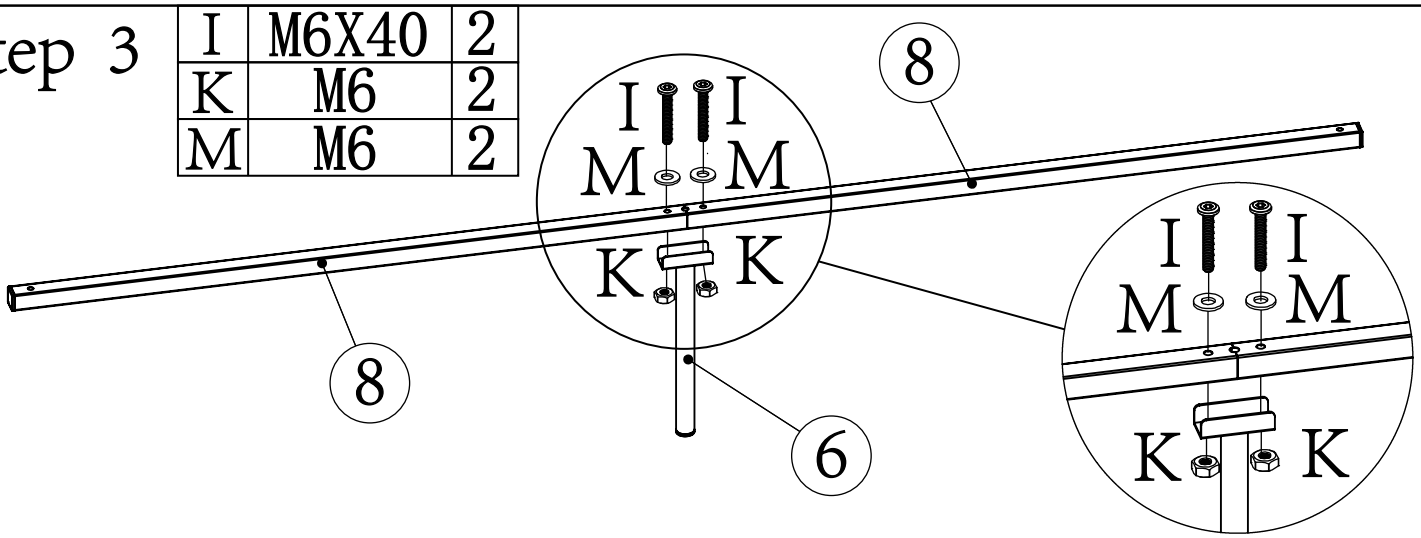

Step 4

N		16

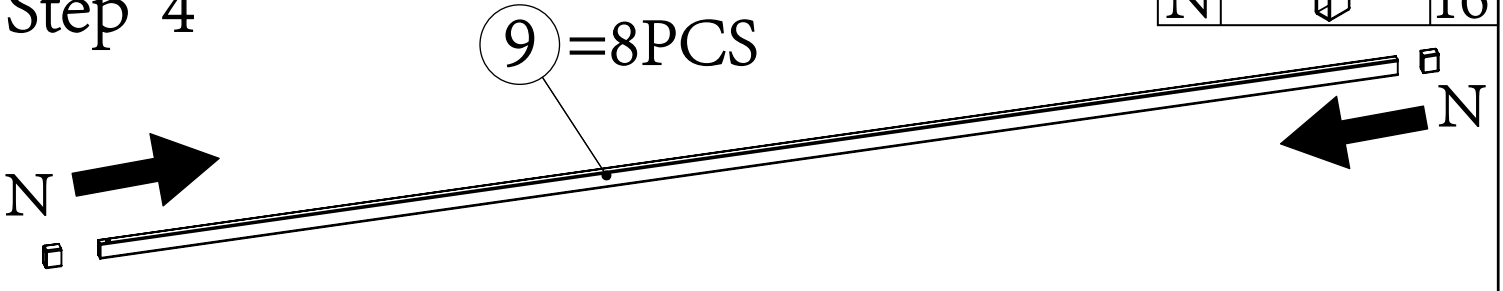

Step 5

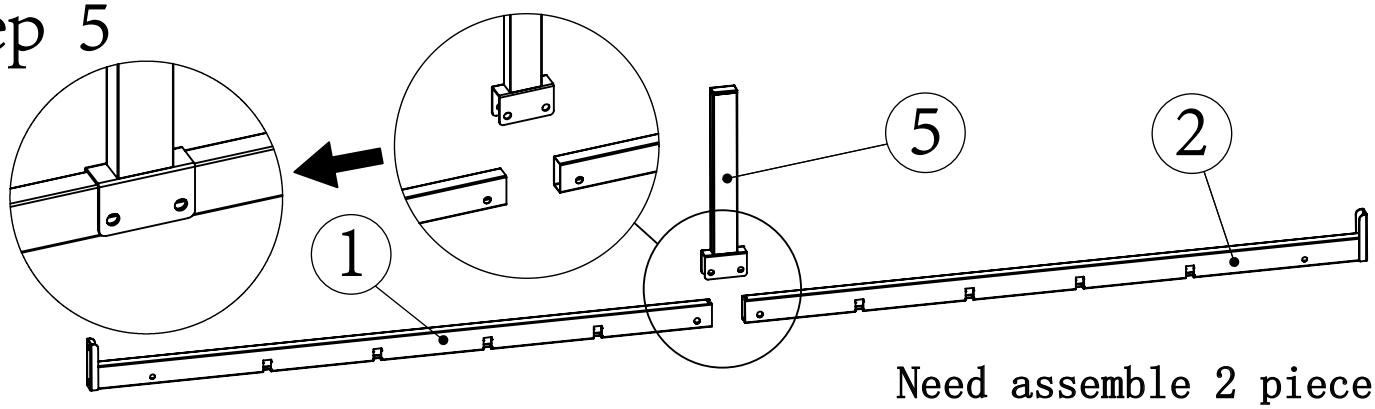

Need assemble 2 pieces.

Step 6

D	M8X35	4
I	M6X40	4
J	M8	4

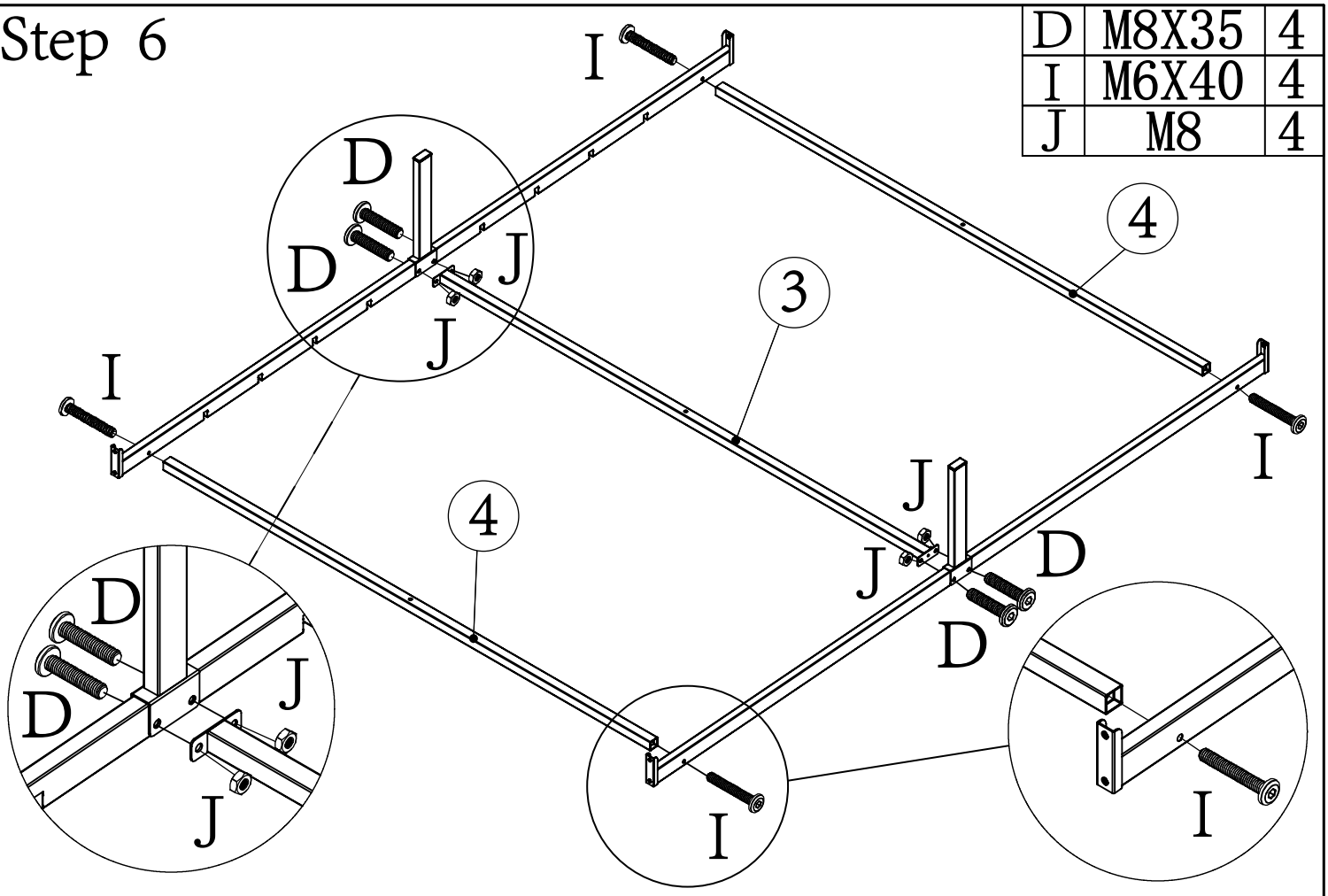

Step 7

B	M8X50	2
C	M8X40	8
L	M8	10

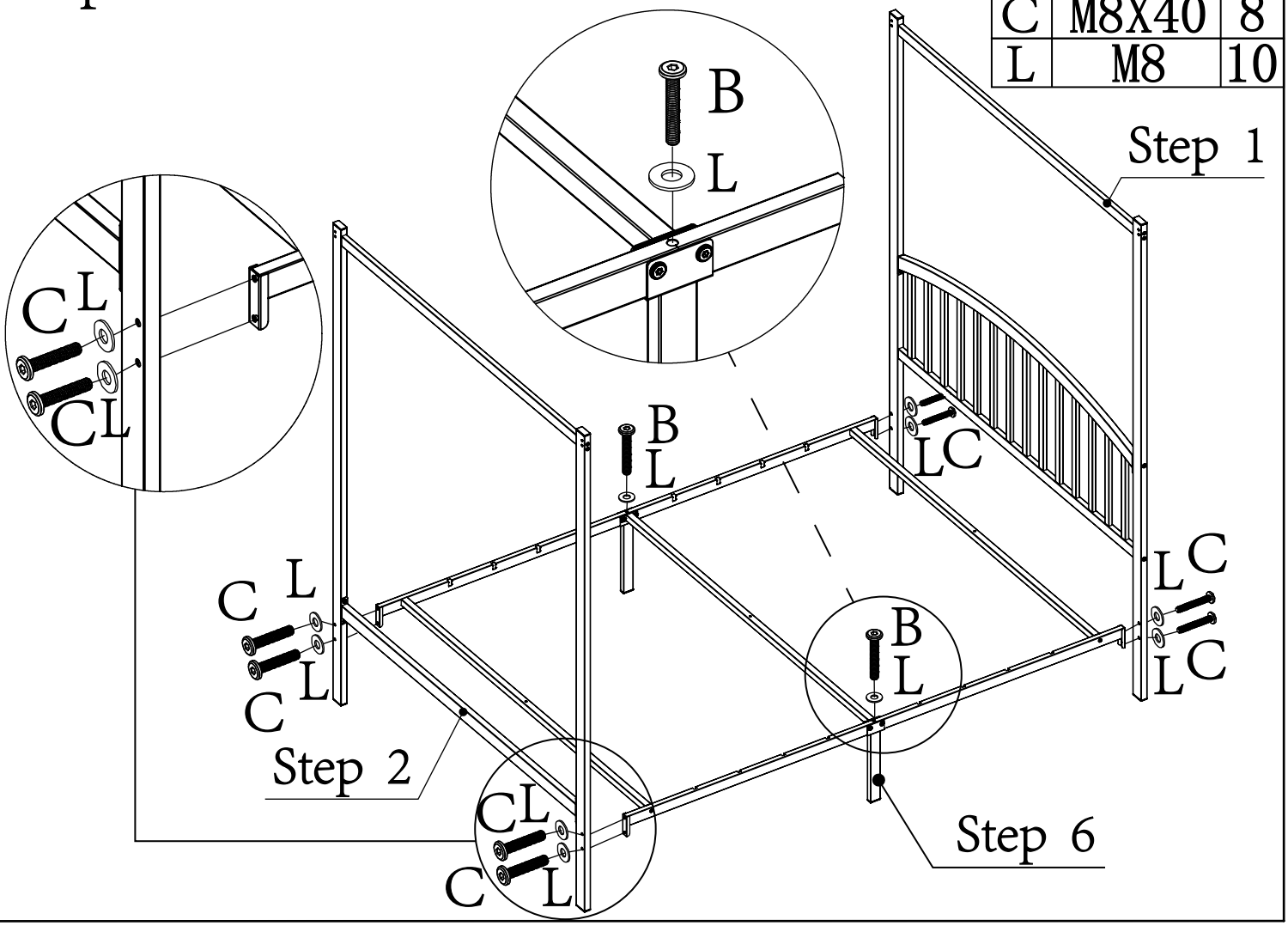

Step 8

H	M6X50	8

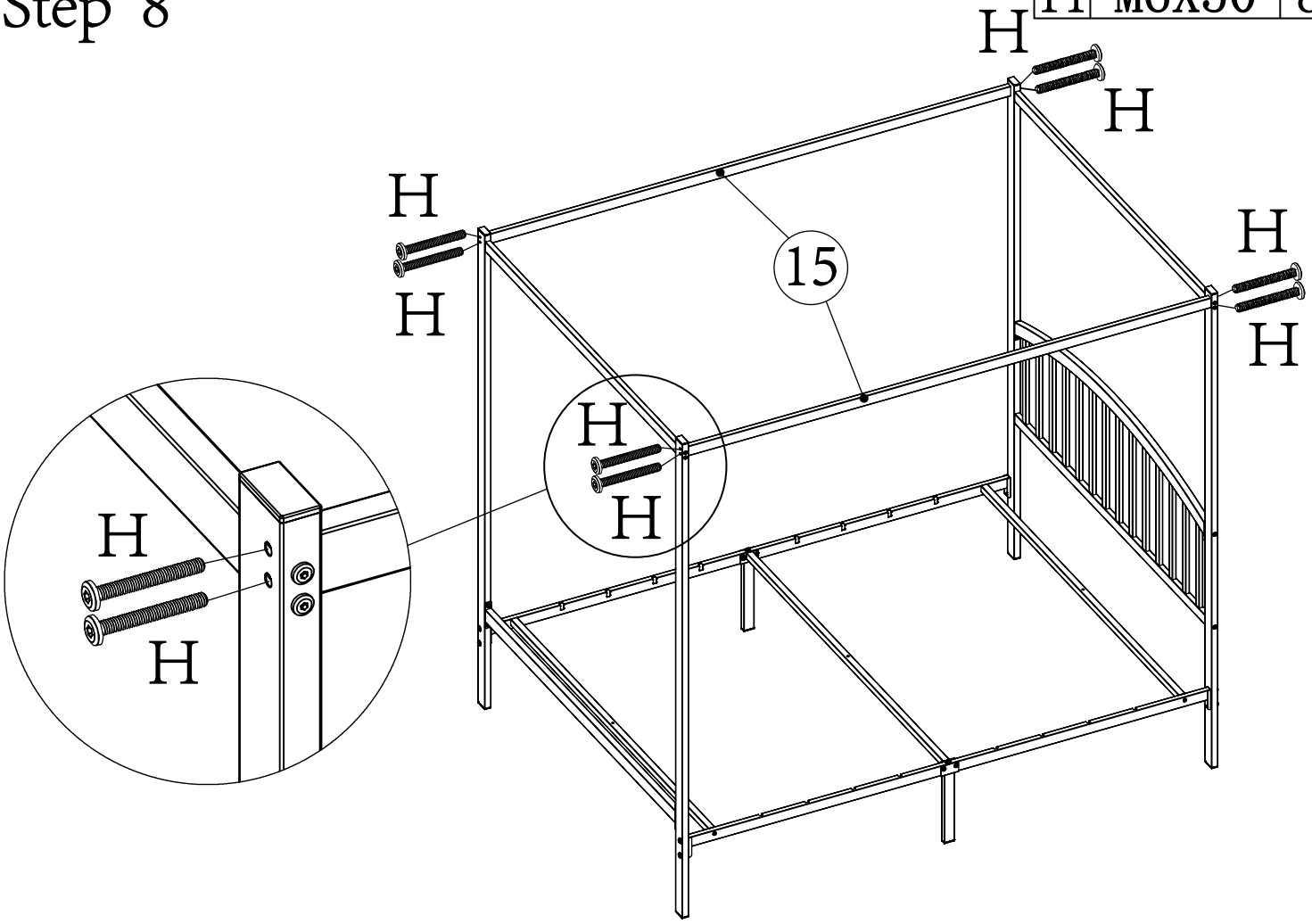

Step 9

G	M6X70	3
M	M6	3

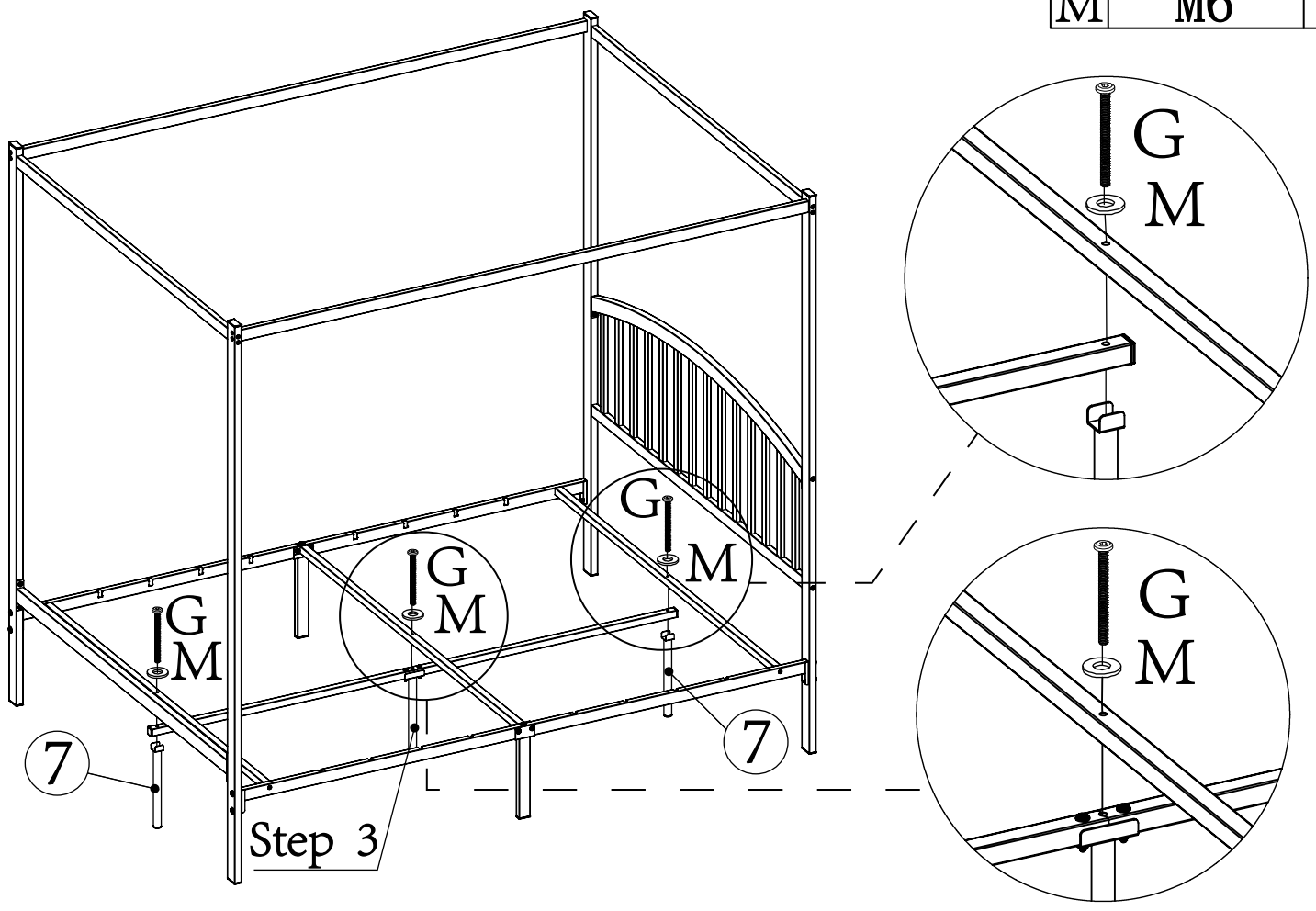

Step 10

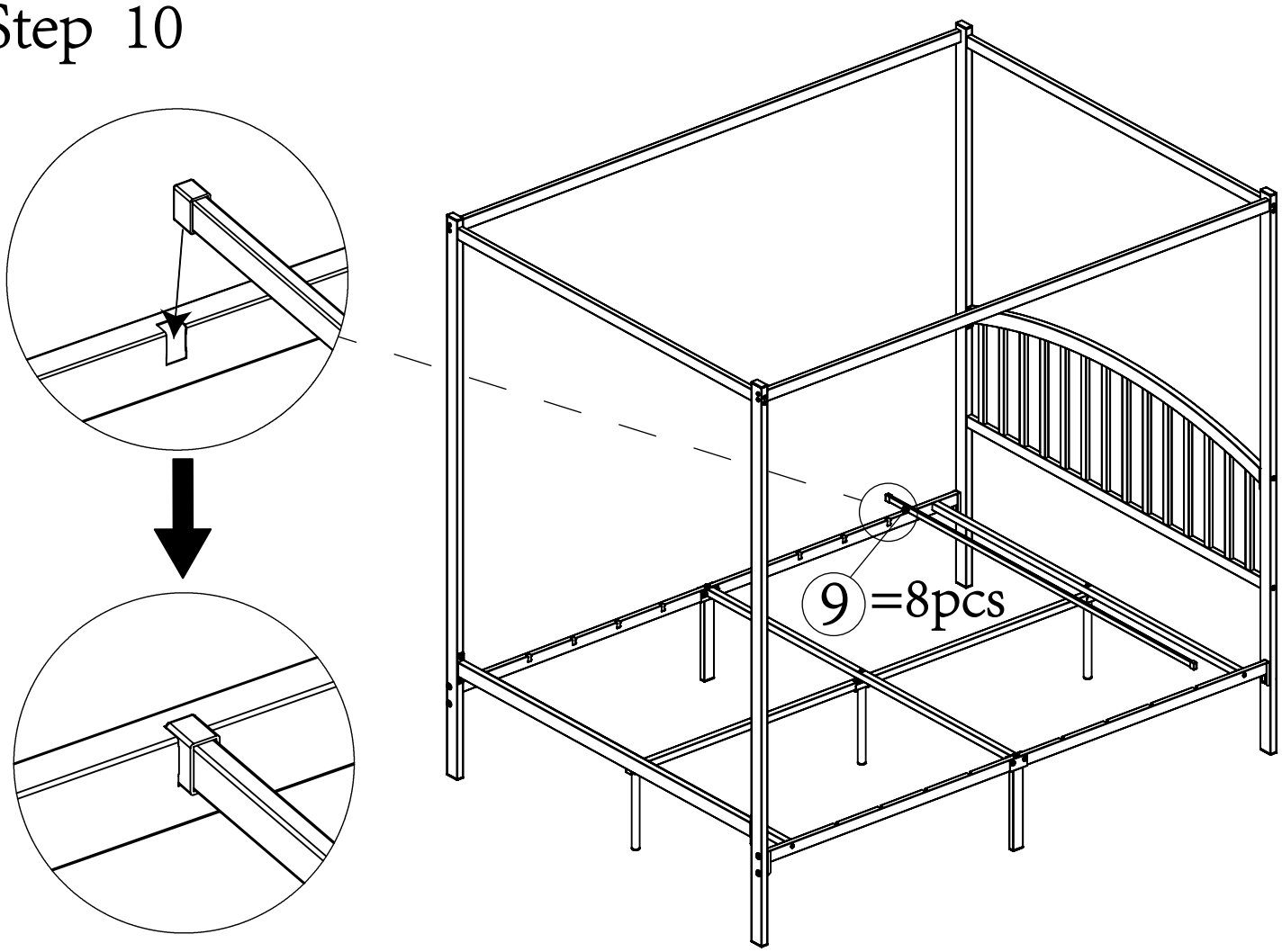

Step 11

