Owner Manual

WARRANTY

We strive to offer high quality product and we also try our best to satisfy each customer that order from us, no matter on products or services as needed. Each customer receives a record of their order, such as the order number or item receipt. For any items that are out of warranty period, you may still be able to purchase the replacement parts from our company if they are available.

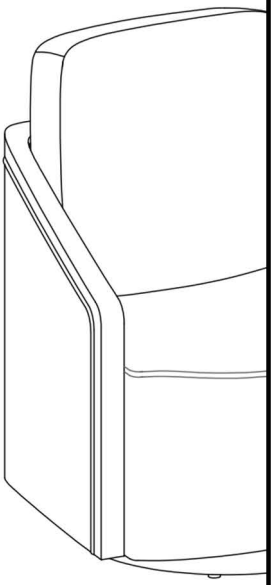

MAINTENANCE AND WARNING

- Please read the manual thoroughly before you start installing.
- Please keep the product away from sharp object.
- Packaging and small parts may have chocking hazard, please keep them away from children and pets.
- Please clean the product according to each clean code, check the product description for more information.
- Please keep the product away from fire.
- If you have any other questions, please contact us, we will be glad to help you out.
- If the product is placed under direct sunlight, the pattern or color might fade away overtime.
- Check the product periodically to make sure everything is secured and tightened.
- Always use proper tools for installation.
- Do not jump on the product.

One people

Around 15 min

PRODUCT DESCRIPTION

Wrapped in high quality chenille, this chair offers exceptional elasticity, breathability, and a velvety soft texture for a refined seating experience.

The seat integrates high density foam, resilient synthetic fiber, and pocketed springs, ensuring optimal pressure relief and long term durability.

A solid wood frame and reinforced 360° swivel base provide exceptional stability and a weight capacity of 350 lbs, ensuring years of reliable use.

Thoughtfully designed contoured backrest and integrated armrests enhance posture support while delivering superior comfort.

Ideal for living rooms, reading nooks, or home offices, this chair seamlessly combines functionality and modern aesthetics.

EXPLODED VIEW

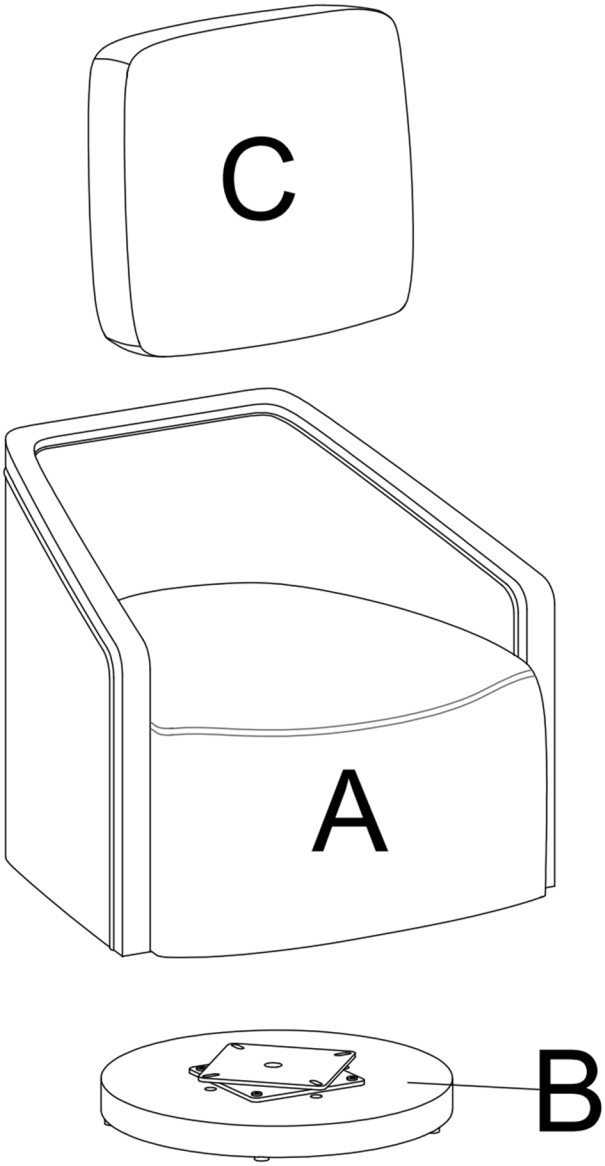

PARTS

A*1

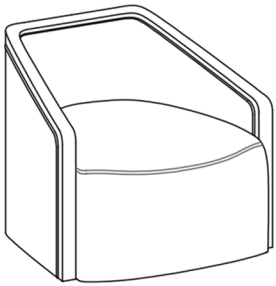

Seat frame

B*1

Swivel base

C*1

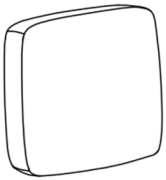

Back cushion

HARDWARE

TOOL LIST

NOTE: Designated with (★) We provide additional spare parts in the hardware package

①*4

★M8*20mm
Bolts

②*1

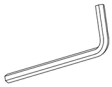

M8
Allen key

Please make sure all hardware&packing material fitting the list. Especially some small accessories may be missing during transportation. Please contact us if you have any question.

step 1

Align the mounting holes of the square turntable with the four screw holes on the wooden base. Use the allen wrench provided to tighten the bolts.

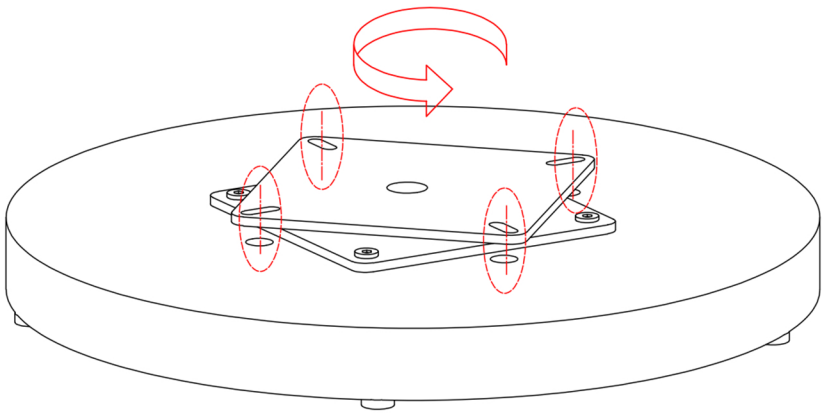

step 2

Insert the screw through the hole at the bottom of the wooden base, then pass it through the mounting hole of the square turntable. Finally, screw it securely into the assembly hole on the bottom of the chair. Use the allen wrench provided to tighten it firmly for stability.

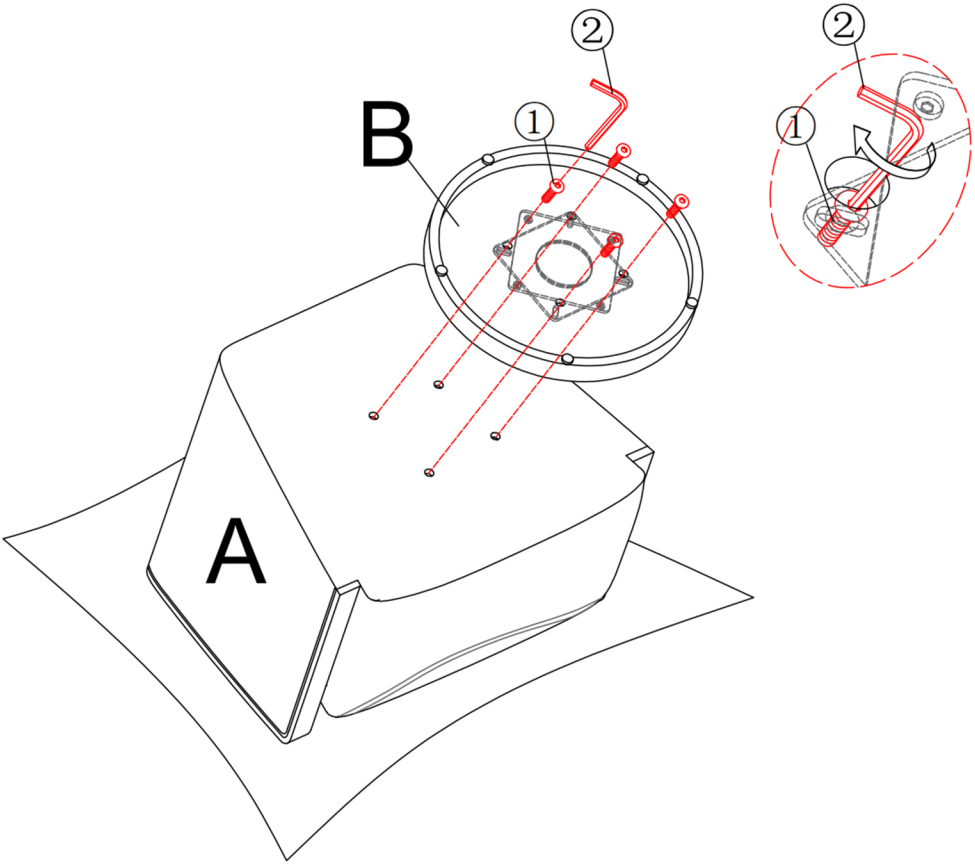

step 3
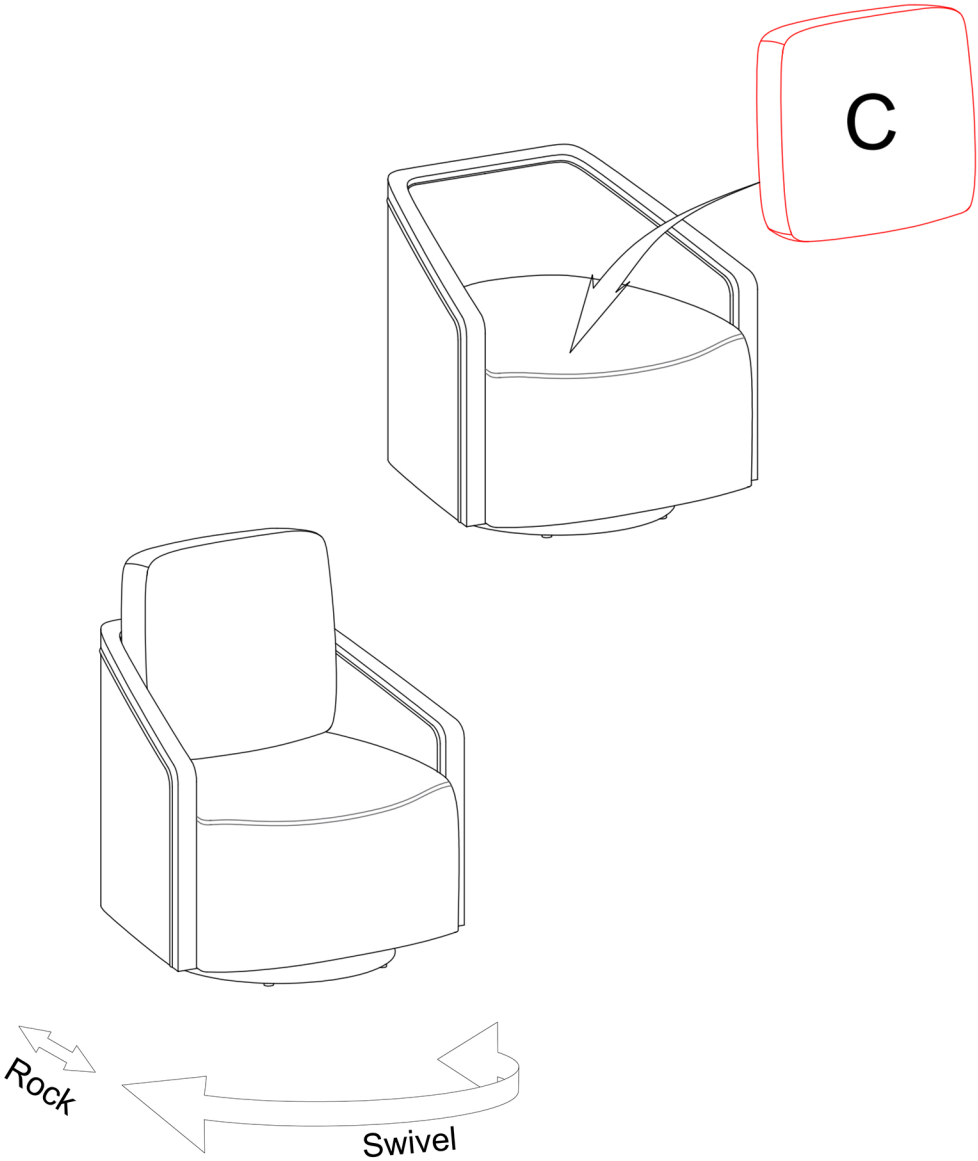
Please the back cushion (C) on it.