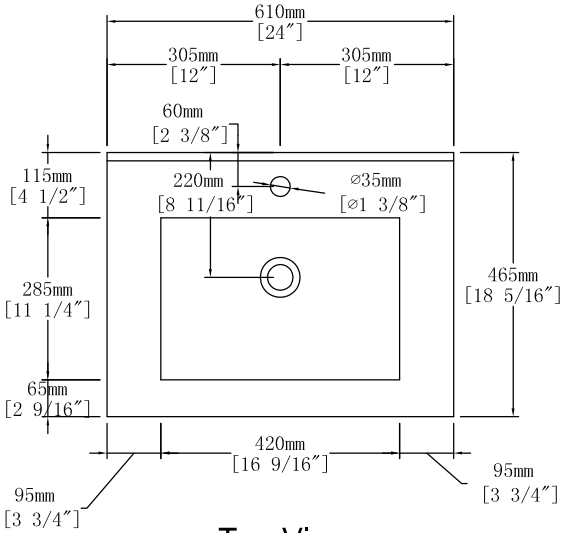

Top View

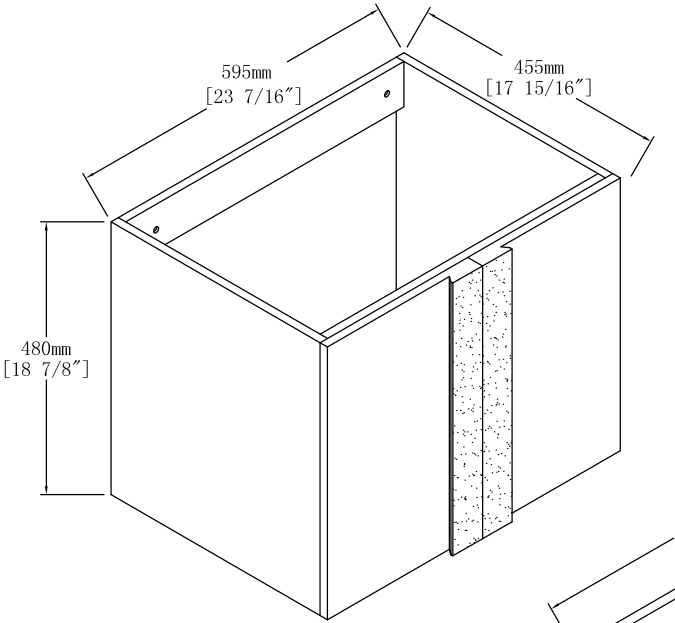

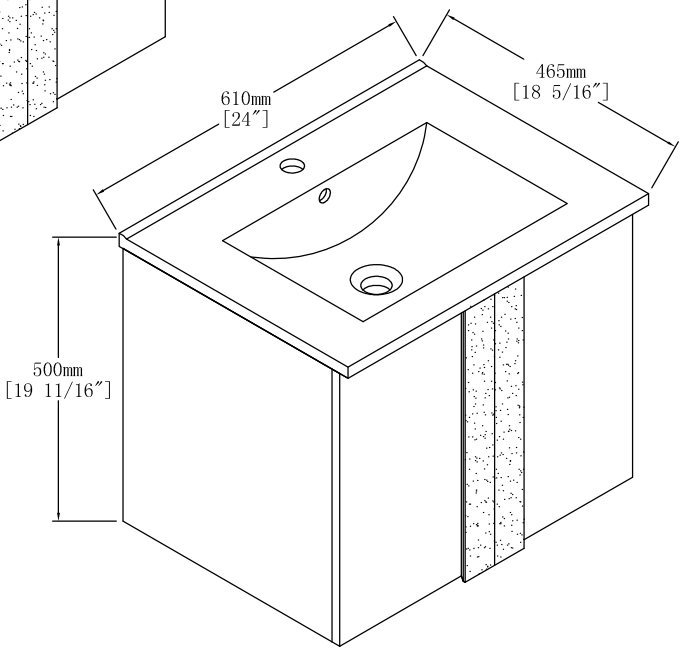

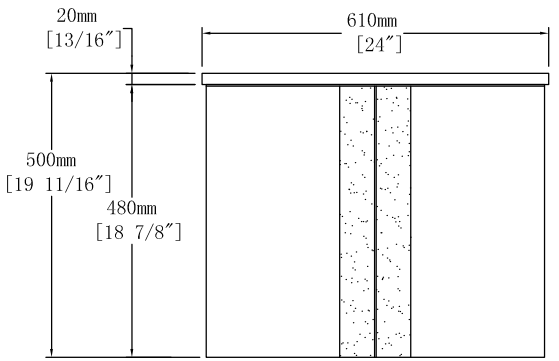

Front View

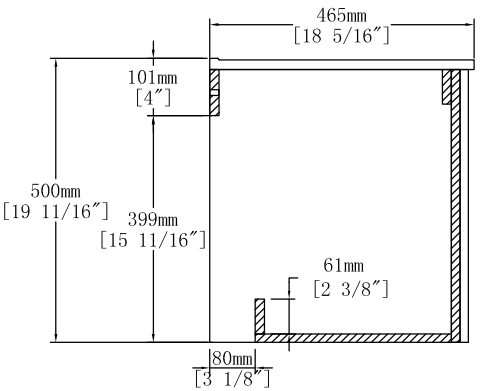

Side View