LED Bathroom Vanity Mirror

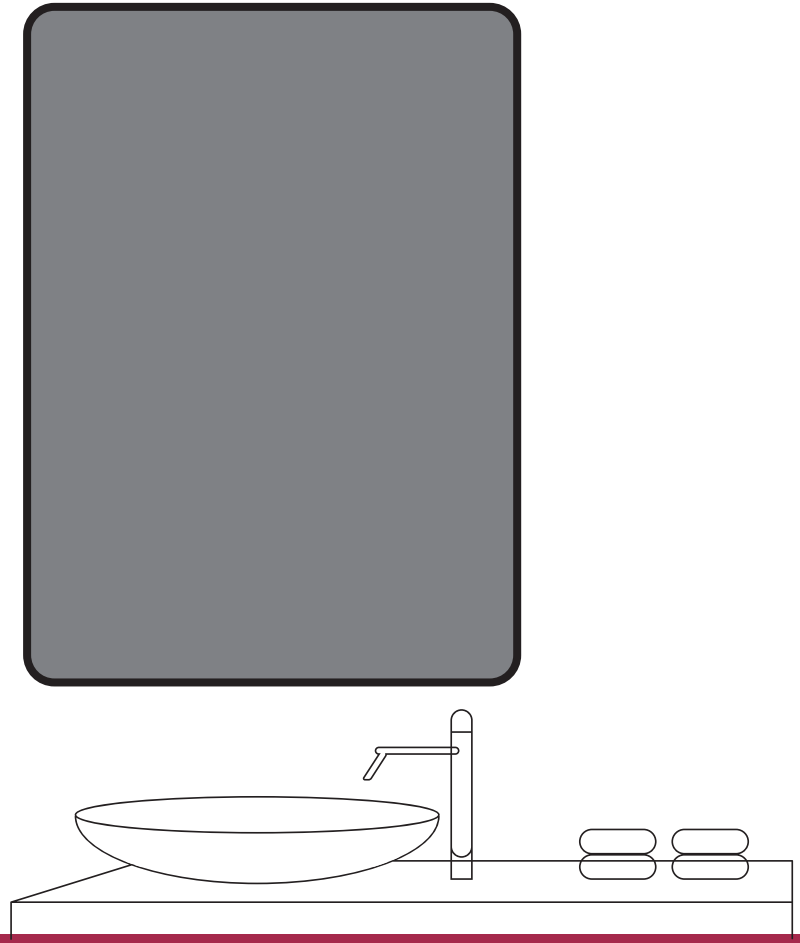

Step 1

Use the tape measure the height,and draw the horizontal line and the vertical line of the wash-basin.Measure the distance of the mirror hole, and mark the hole place on the wall.

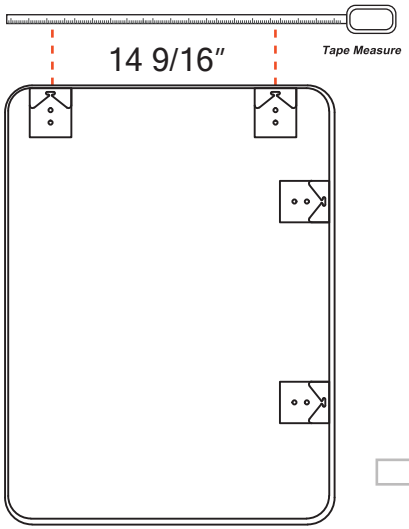

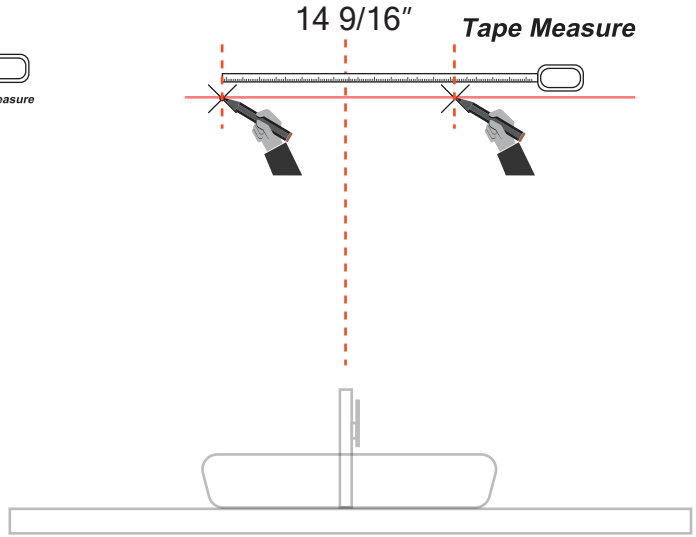

Step 2

Drill and insert the Wall Anchor, Drive in the screw cross the bottom support.

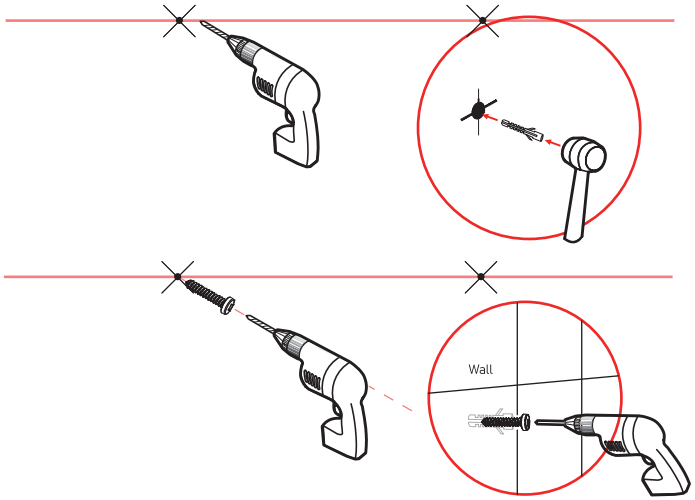

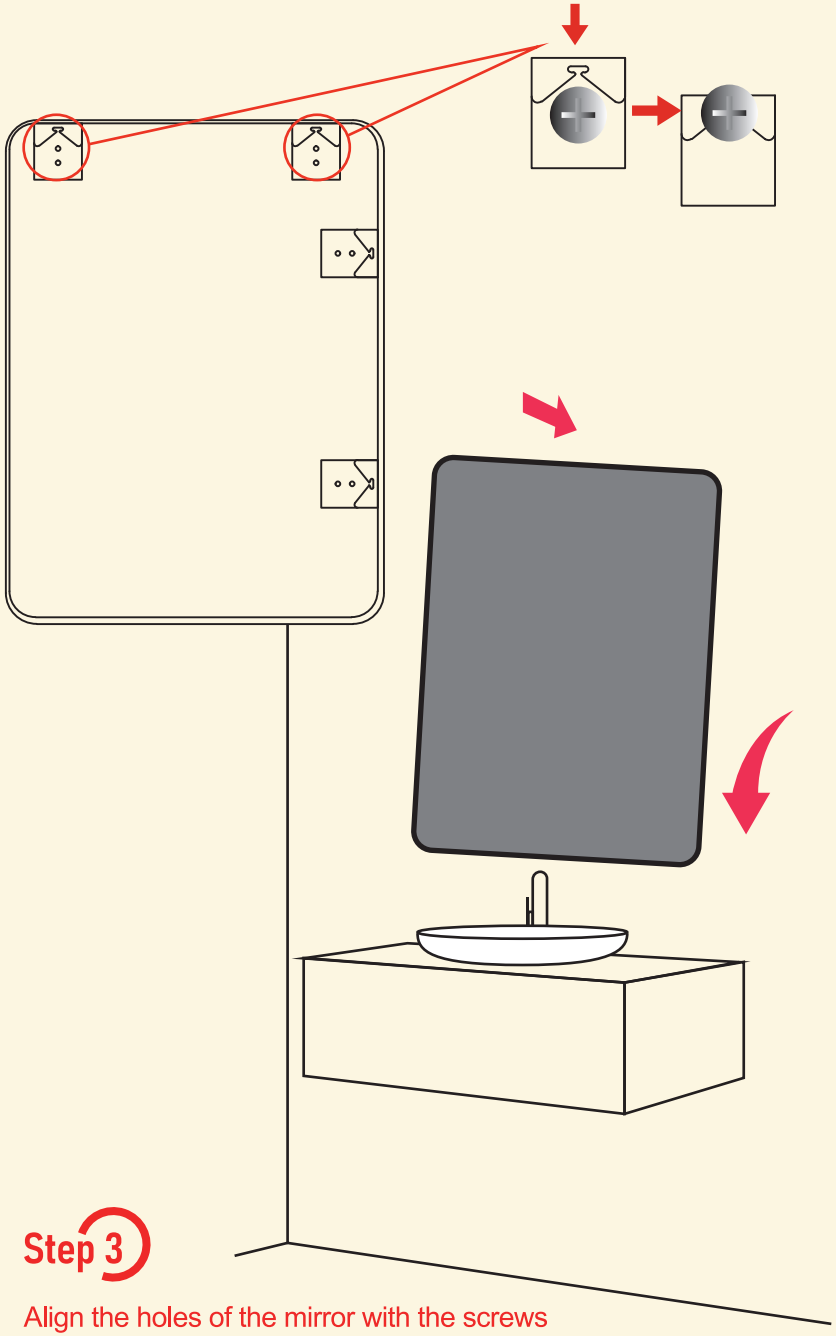

Step 3

Align the holes of the mirror with the screws and hang them to complete the installation