FINE FIXTURES

206 Wembly Road
New Windsor, NY 12553
Phone: 718.602.6060
Fax: 718.963.2082
info@finefixtures.com
www.finefixtures.com

SPECIFICATIONS / TECHNICAL DATA

CITISCAPE
VANITY COLLECTION

24”

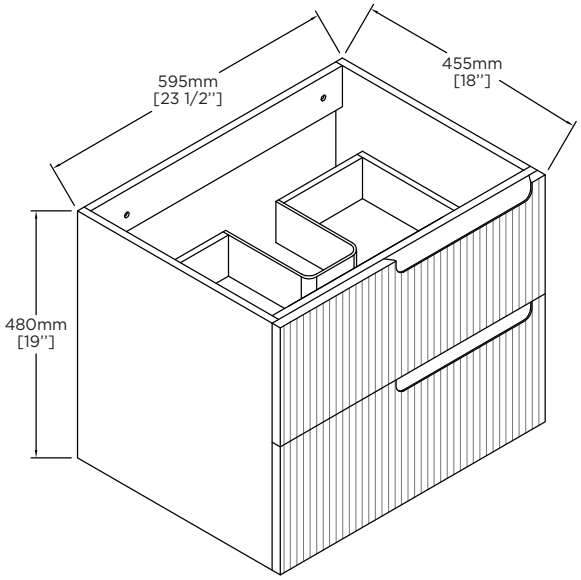

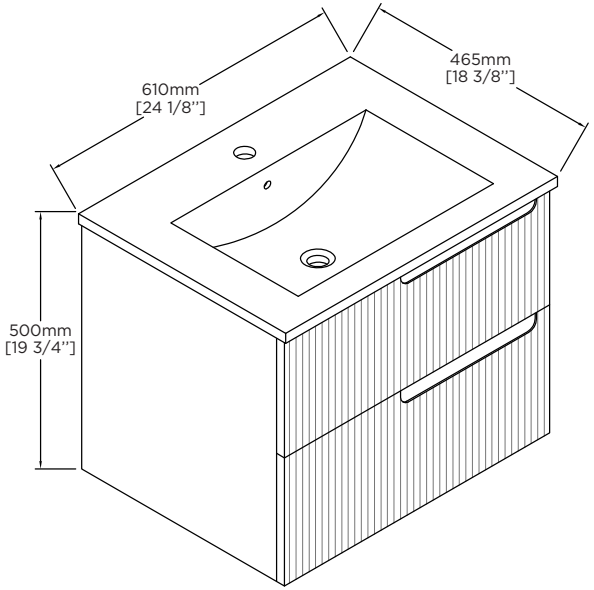

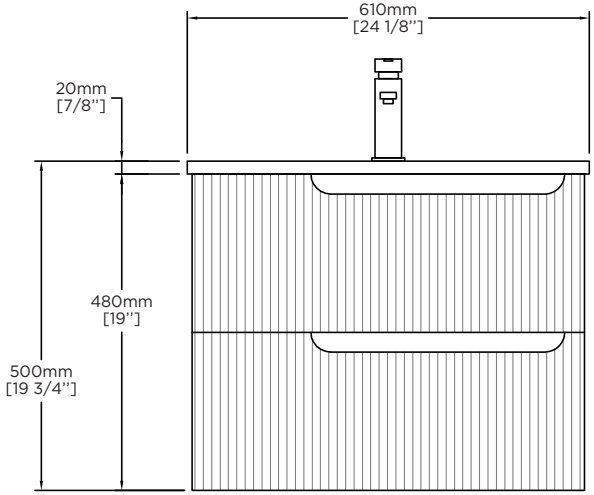

10.07.2024

ATTENTION! Dimensions may vary by up to 3/8”. It is highly recommended to pull all dimensions of actual model for installation and measuring purposes.

MODEL# CT24