Porch Swing
Owner's Manual

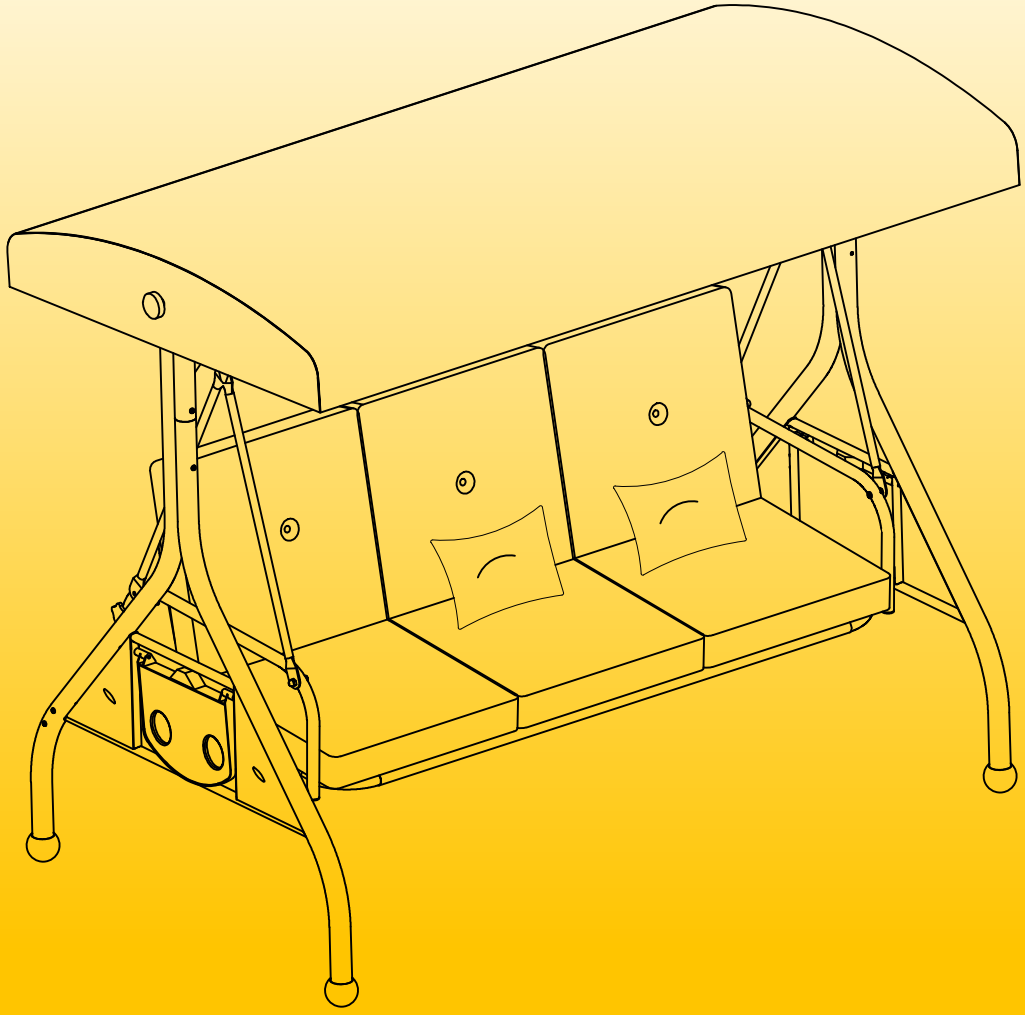

Need help starting?
Scan the QR code for installation video guidance.

installation video

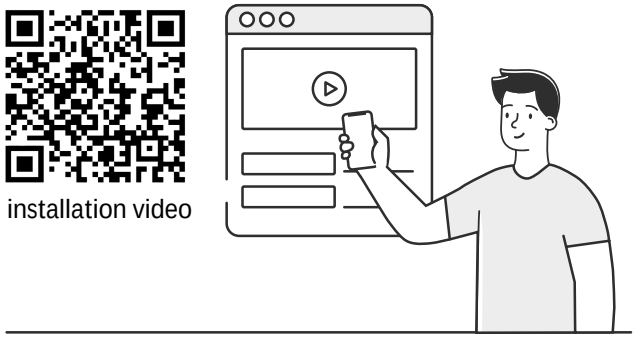

IMPORTANT INFORMATION

Please check all parts and components to ensure that there are no damages or missing items before starting the assembly of the product.

• If using power tools, set them to the lowest setting to avoid damaging the parts.

• Assemble on a soft surface such as a drop sheet or rug to avoid scratching.

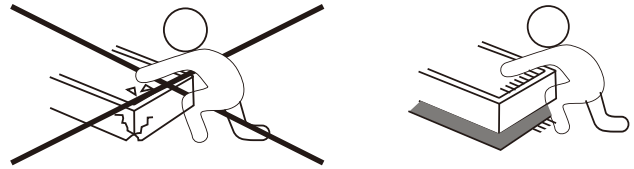

• For easy assembly, it is recommended that two people assemble together.

• We recommend using an electric screwdriver for faster installation.

• Tips: When installing the screws, insert all of them loosely frst, then tighten them once everything is in place.

Parts List

A 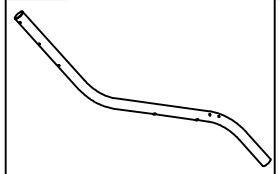	B 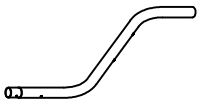	C 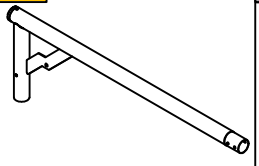	D 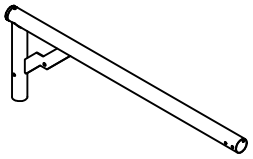
2PCS	2PCS	1PC	1PC
E 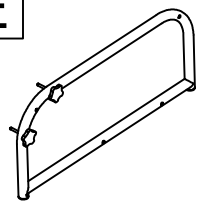	F 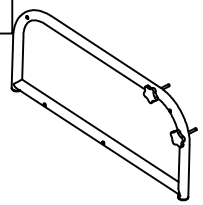	G 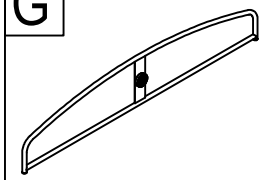	H 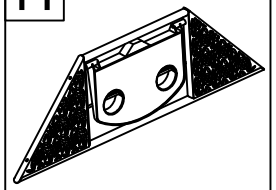
1PC	1PC	2PCS	2PCS
I 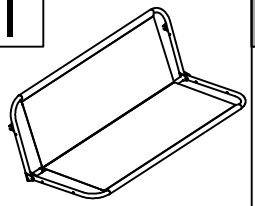	J 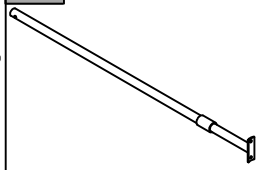	J1 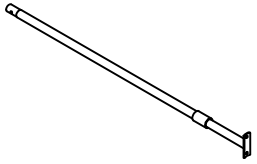	K 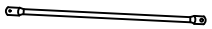
1PC	1PC	1PC	2PCS
K1 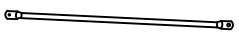	L 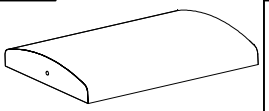	M 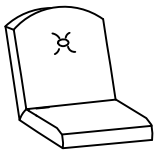	N 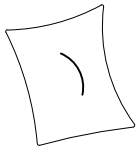
2PCS	1PC	3PCS	2PCS
W 	W1 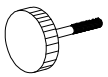 M8*40		
4PCS	2PCS		

Hardware List

O 	P  M8*65mm	Q  M8*40mm	R 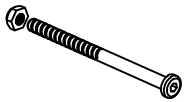 M6*105mm
2PCS	4PCS	4PCS	6PCS
S  M6*60mm	T  M6*55mm	U  M6*30mm	V  M6*15mm
4PCS	2PCS	1PC	8PCS
V1  M6*40mm	X 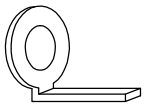	Y 	Z 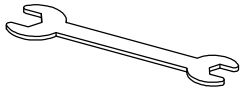
2PCS	2PCS	1PC	1PC

STEP1

A*2

B*2

W*4

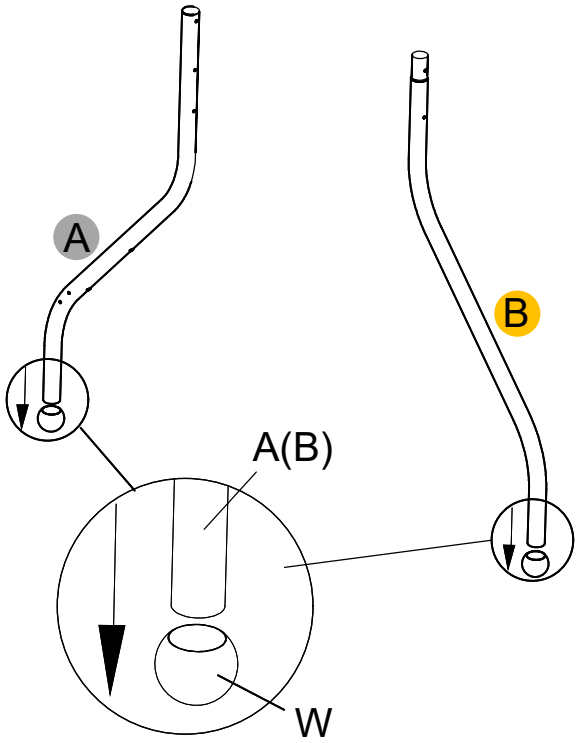

Install plastic anti-slip foot caps on the rods. Afterwards, ensure that **Part W** is securely fastened and does not fall off when shaken.

STEP2

C*1

D*1

R*6

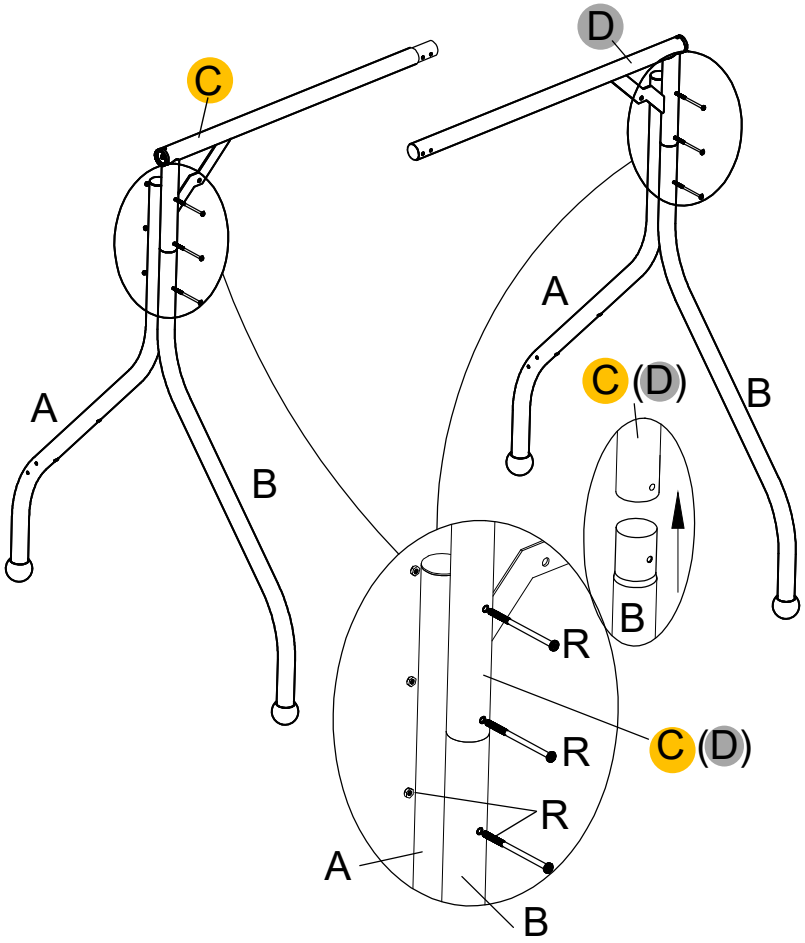

Align holes before inserting the screw **Part R**, install each screw **LOOSELY** first for smooth assembly later.

Note: Assemble with multiple people.

STEP3

T*2

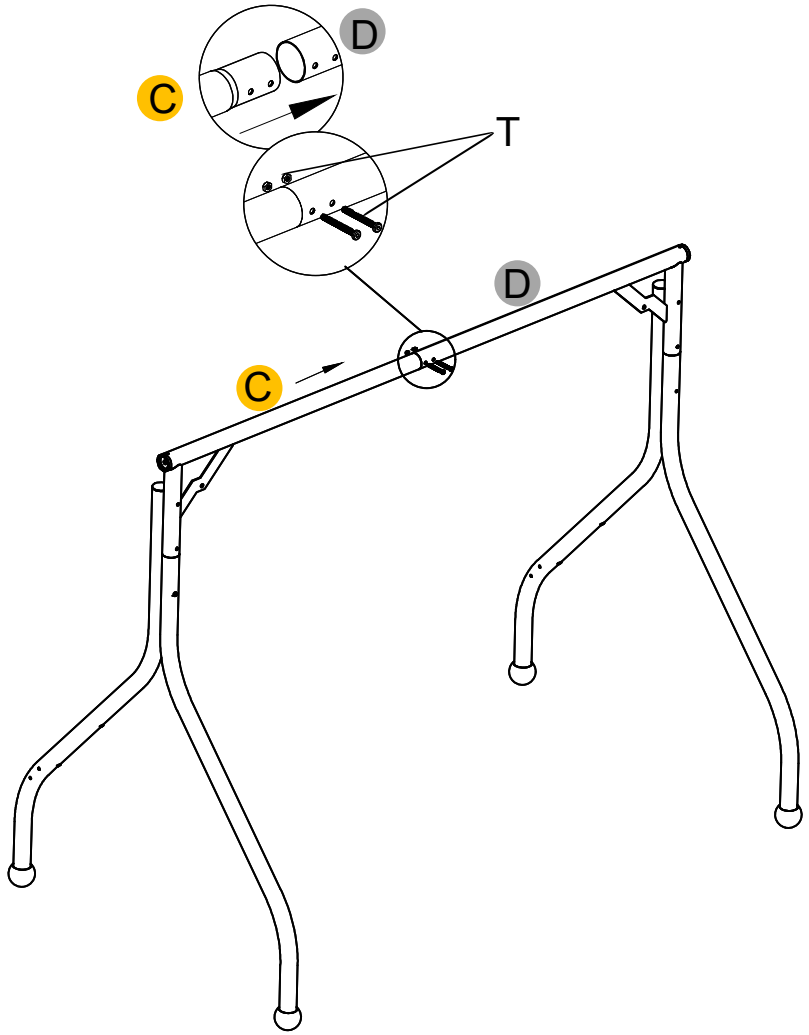

Match **Part C** with **Part D**, then insert **Part T**.

Note: Lightly scrape small amount of coating from **C**'s surface to ease install, if needed.

STEP4

J*1

J1*1

S*4

U*1

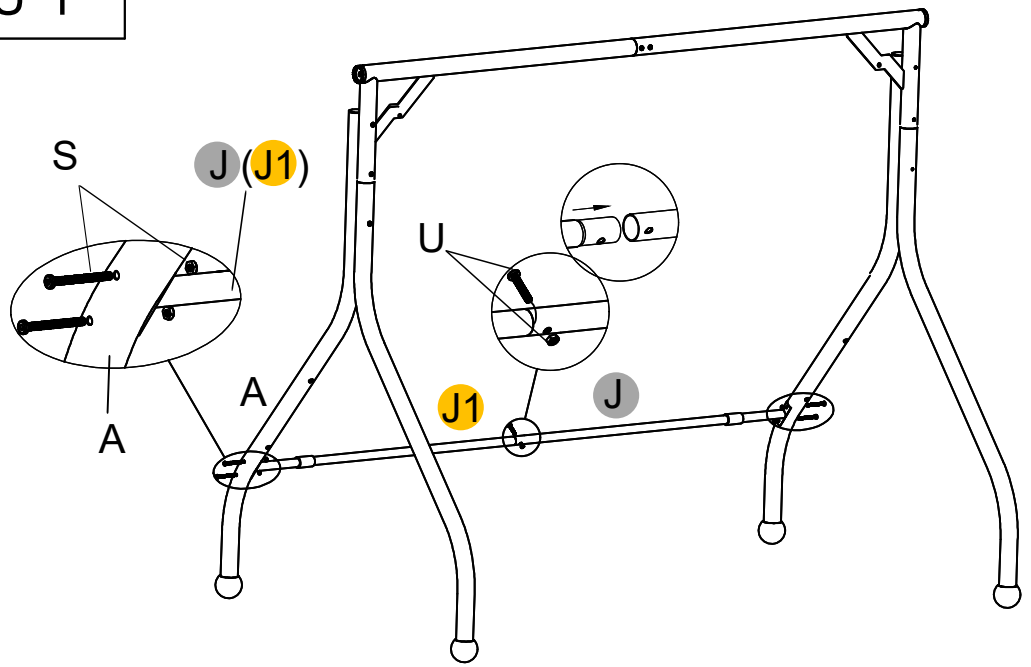

Match **Part J** with **Part J1**, then insert **Part U**.

Note: Lightly scrape small amount of coating from **J1**'s surface to ease install, if needed.

STEP5

H*2

V*8

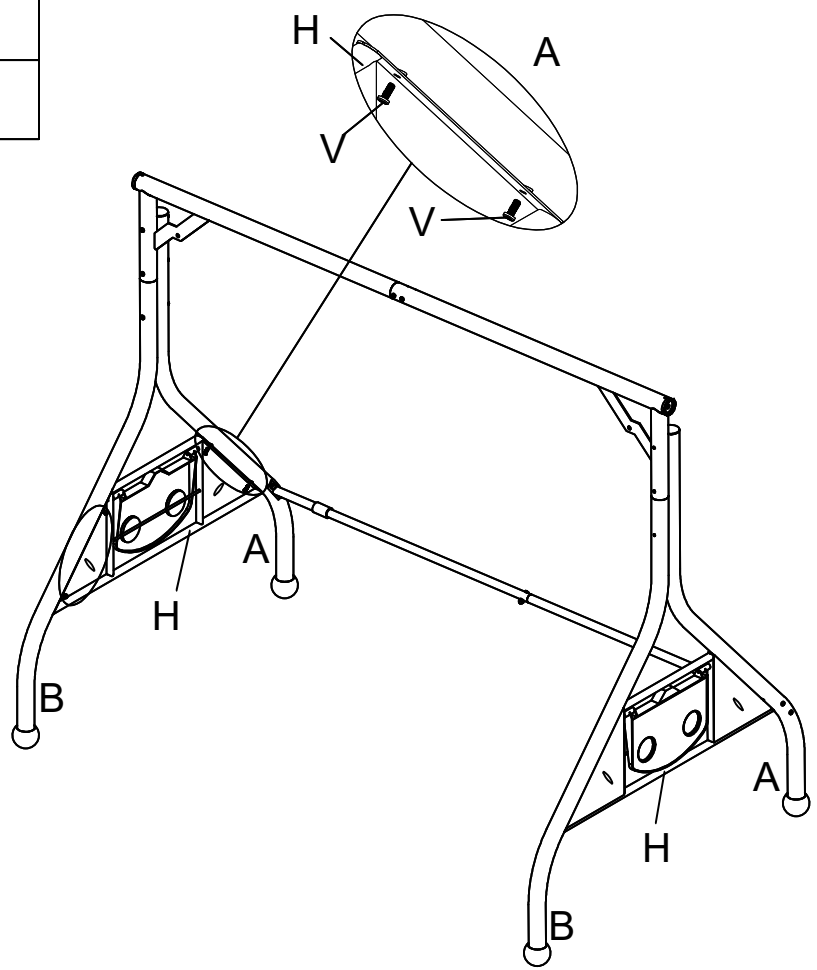

Install **Part H** on the swing frame by fastening **Part V** to **Part A & B.**

Note: Install one screw on **Part A & B** first for easier assembly.

STEP6

E*1

F*1

V1*2

X*2

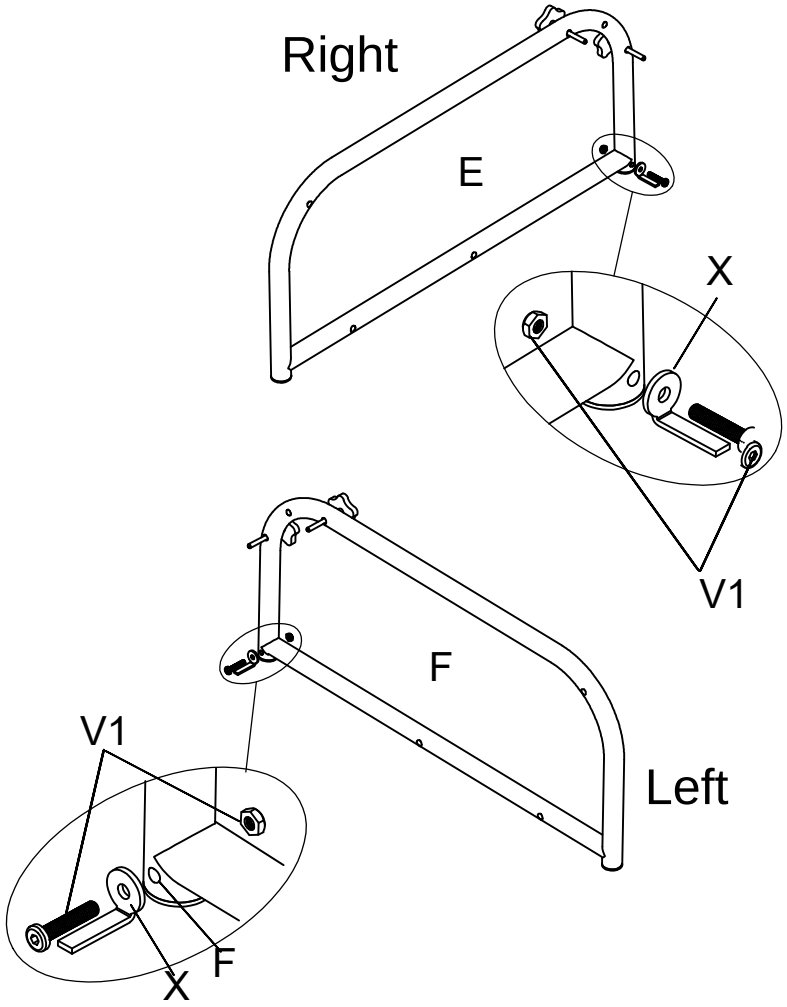

Install screws **Part V1** & **X** on **Parts E** &**F** as shown above.

STEP7

I*1

P*4

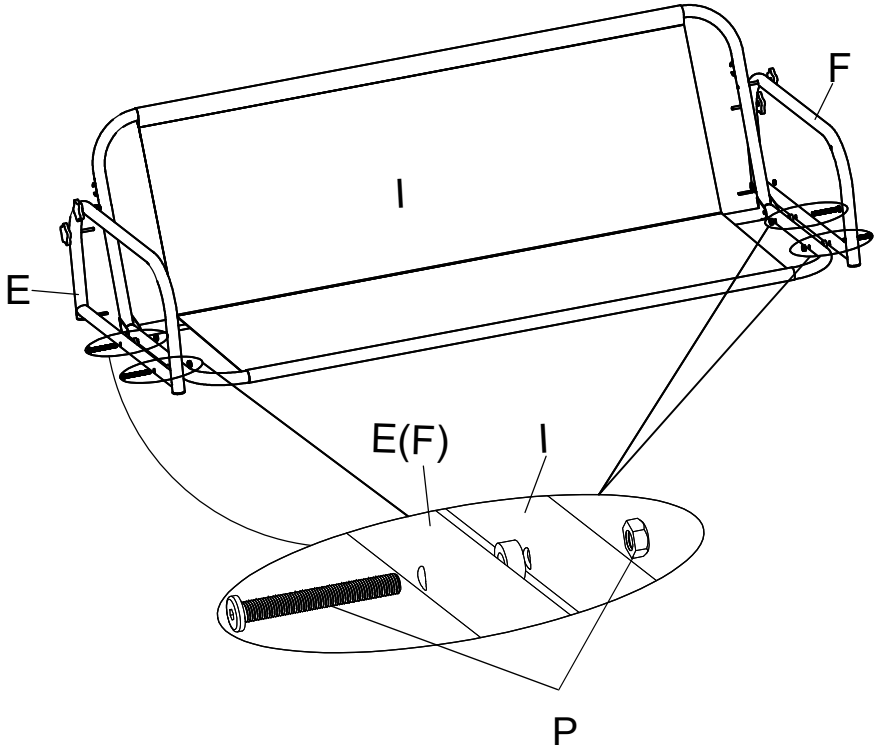

Install screws **Part P** on **Parts E** &**F** as shown above.

Note: **LOOSELY** fasten all screws first, then tighten them for smooth assembly.

STEP8

K*2

K1*2

Q*4

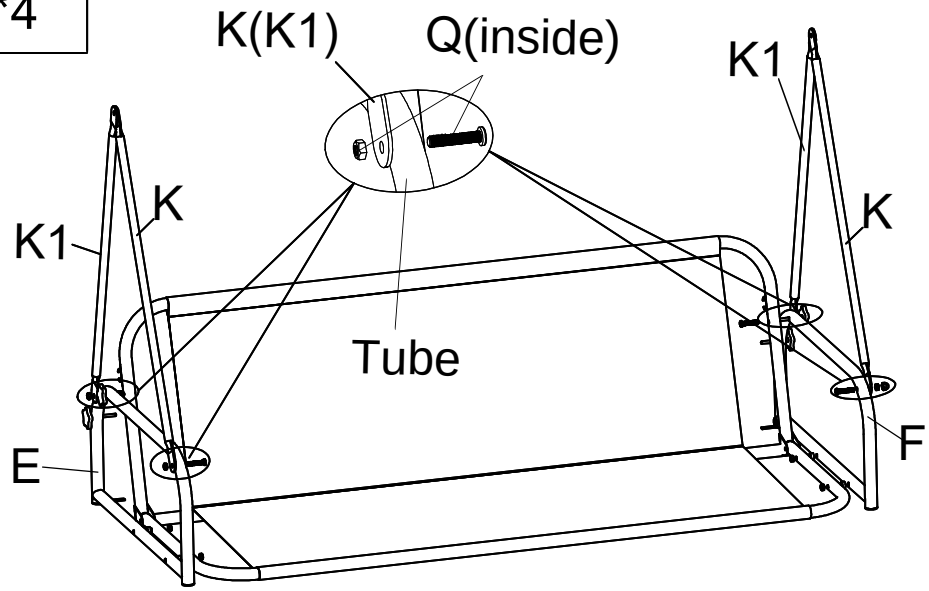

Install **Part K/K1** on the same side : **K** in front of the armrest, **K1** adjacent to the backrest.

Note: **Part Q**'s bolts **inside**, nuts **outside** the swing.

STEP9

O*2

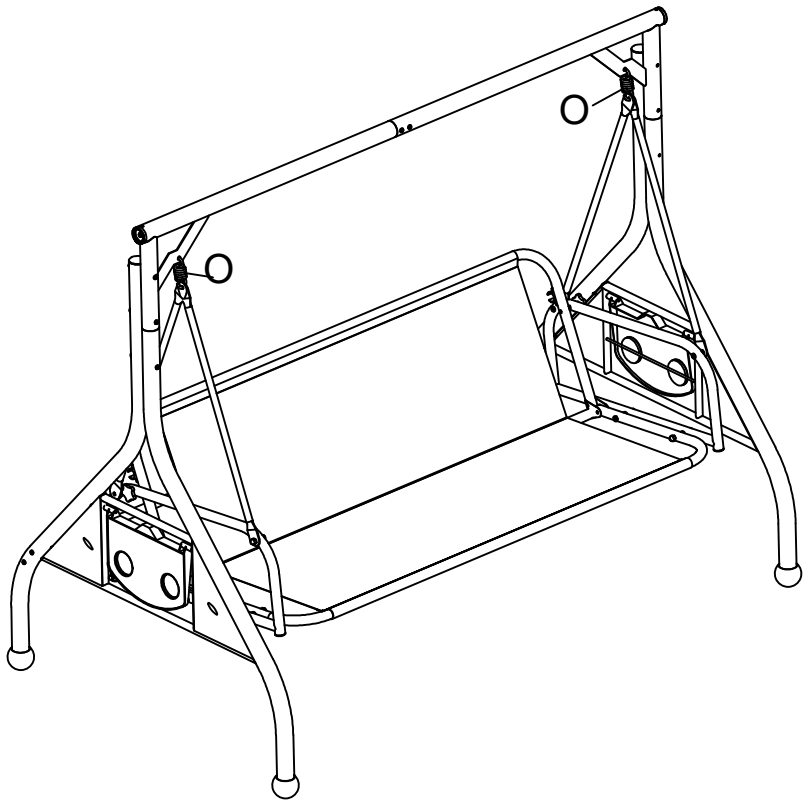

Thread **Part O** through **K1** & **K**, then hang it on swing frame.

Note: Two people recommended.

STEP10

G*2

L*1

W1*2

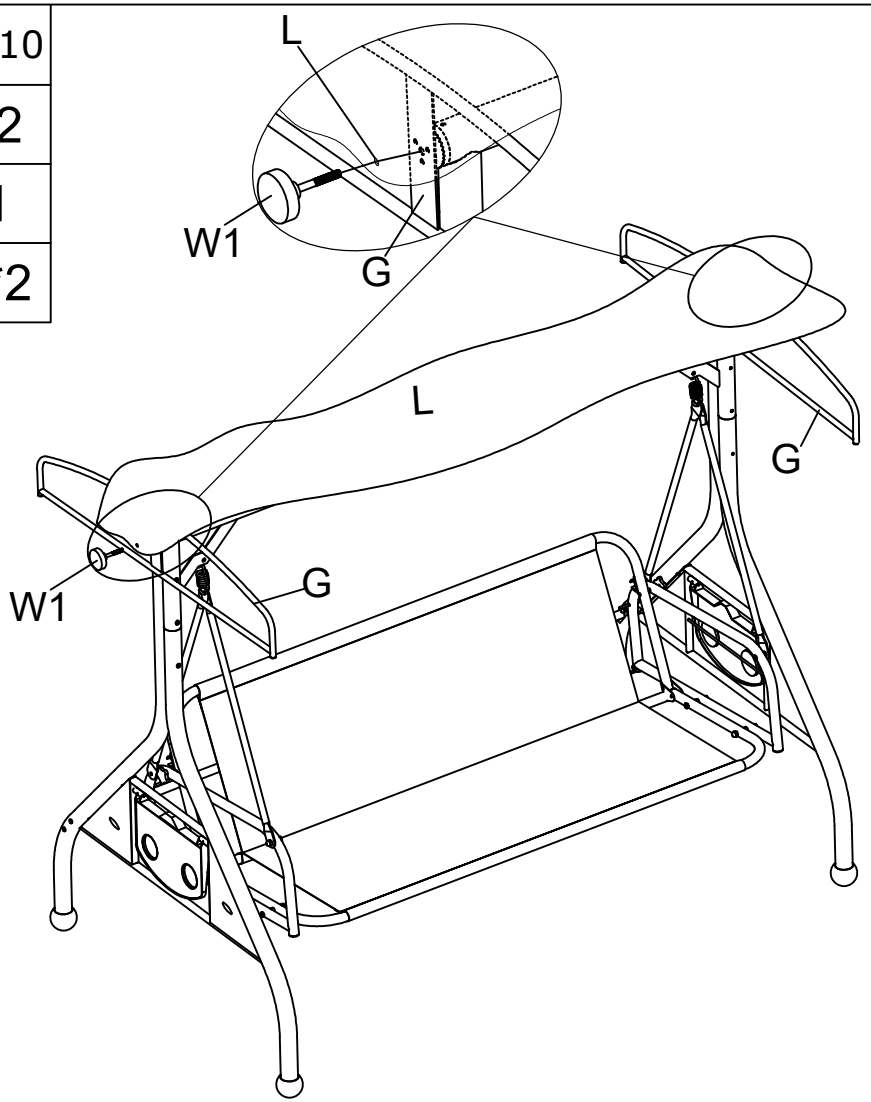

Pass **Part W1** through holes in **L** & **G**, rotate inward to insert and lock it.

Note: Two people recommended.

STEP11

M*3

N*2

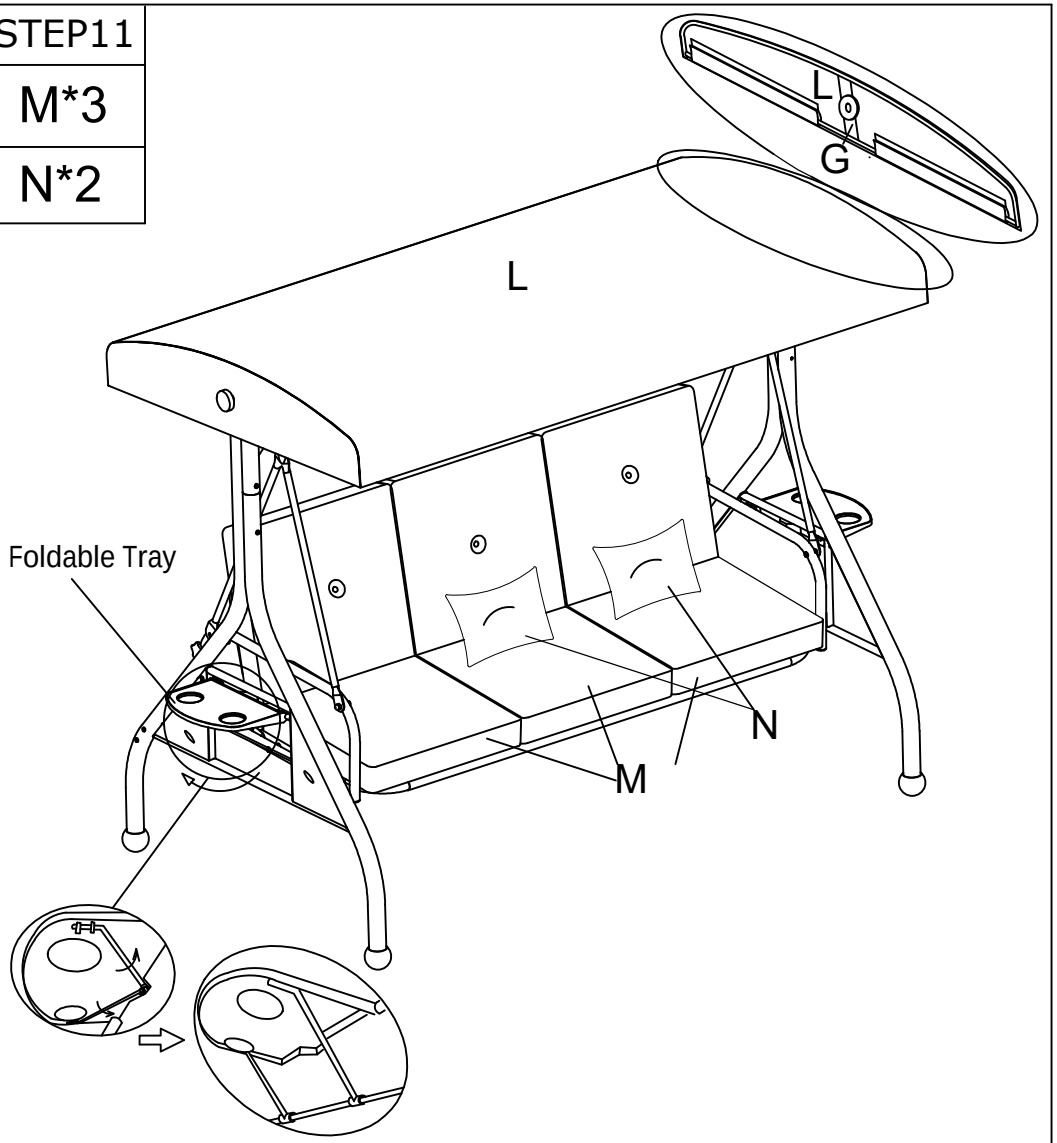

Seat Cushion: Unpack it **72 hours** for optimal recovery. For faster rebound, separate cover from foam to allow more air in.

Pillow: Pat to fluff. For quick plumping, unzip and blow inside with hair dryer, or air-dry in sunlight.

STEP12

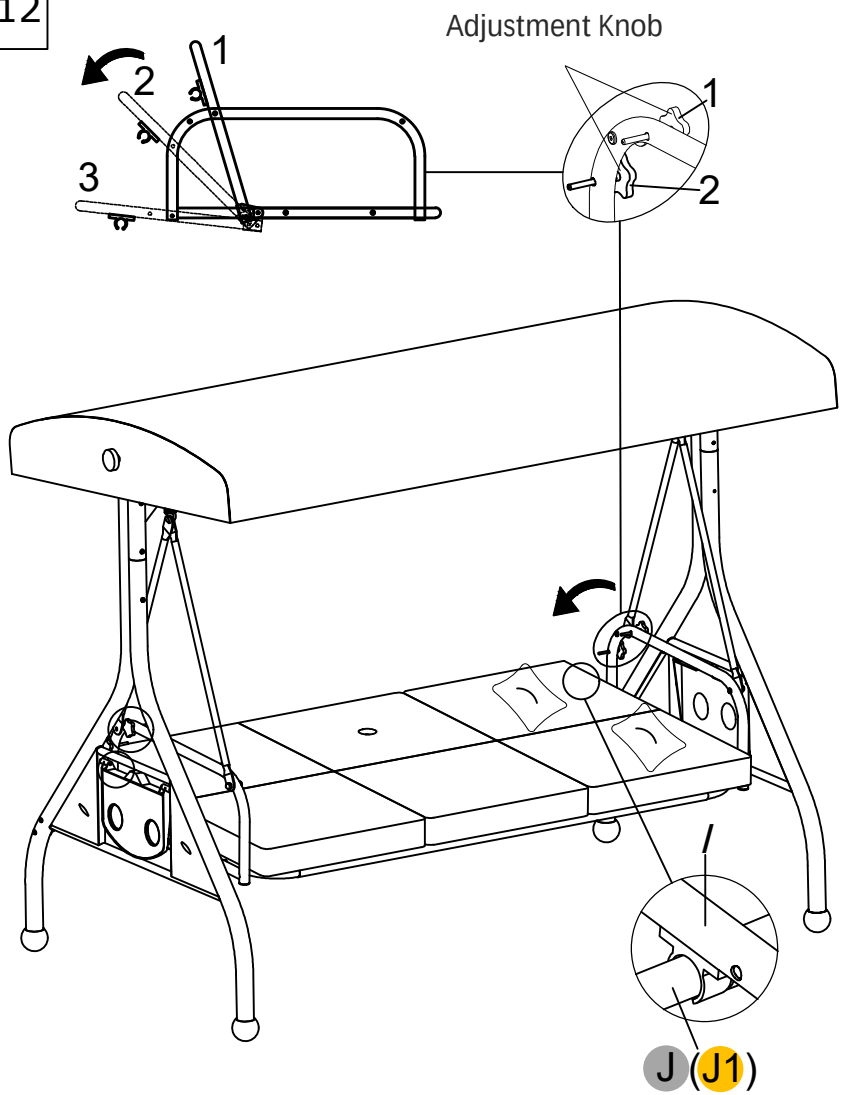

3-Point Adjustment: Ensure adjustment knob fully inserted in when adjusting the angle.
Recline: Confirm **Clip** fully fixed on **J/J1.**

Assembly Finished. Enjoy it Now!