DUO Shampoo Shelf

with Support Rail

HEALTHCRAFT
Embrace life.

Technical Data Sheet

Product Specification

The product shall be a combination shampoo shelf and rectilinear grab bar. The product shall have flange covers that conceal the mounting hardware. All components of the product shall be constructed of #304 stainless steel, suitable for use in wet environments. The grab rail shall have a 0.8x1.2" / 20x30mm cross-section. The product shall have a weight capacity of 500lbs / 227kg. Product shall comply with ADA Guidelines, specifying the structural strength of grab bars, tubs and shower seats. The grab rail shall be HealthCraft model DUO-SHSXX-XX (see table below for appropriate product code).

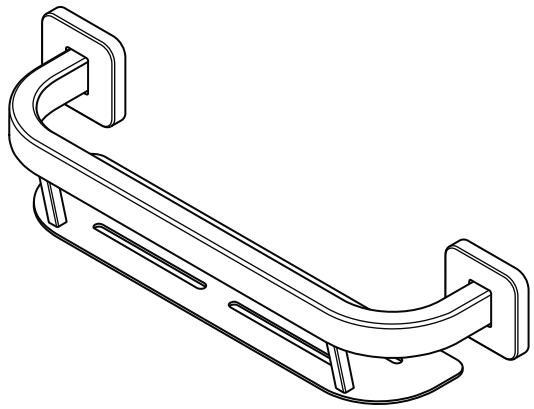

Key Features

- 2-in-1 Bathroom Accessory with Integrated Support
- Solid Construction and EasyMount™ Flanges
- Suitable For Use in a Wet Environment
- 500lbs / 227kgs Weight Capacity*

Codes and Standards

- ADA 609.2 Cross Section
- ADA 609.8 Structural Strength

Specified Model

MODEL	LENGTH	AA - FINISH	MATERIAL
DUO-SHS16-AA	16″ (406mm)	CP (Polished Chrome) BS (Brushed Stainless) BLK (Matte Black) GD (Brushed Gold) ORB (Oil Rubbed Bronze)	#304 Stainless Steel
DUO-SHS24-AA	24″ (610mm)		

Patent Pending.

www.healthcraftproducts.com
Toll-free: 1-888-619-9992

DUO Shampoo Shelf

with Support Rail

HEALTHCRAFT
Embrace life.

Technical Data Sheet

Product Dimensions

Model	Total Length (L)	Notch to Notch (N)
SHS16	19.5″ / 497mm	16″ / 406mm
SHS24	27.5″ / 699mm	24″ / 610mm

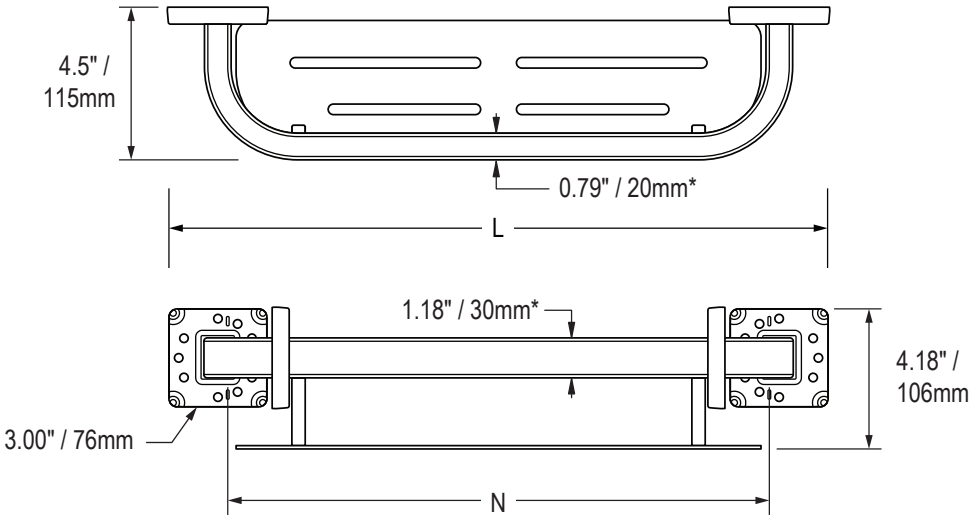

*ADA Compliant

Shipping Dimensions

Model	Height (H)	Width (W)	Depth (D)	Weight
SHS16	4.5" / 11.5cm	20" / 51cm	4.9" / 12.5cm	3.8lbs / 1.7kg
SHS24	4.5" / 11.5cm	28" / 71cm	4.9" / 12.5cm	5.2lbs / 2.3kg

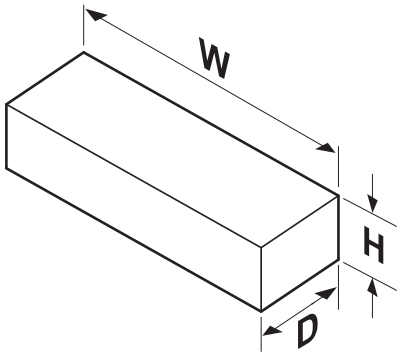

www.healthcraftproducts.com
Toll-free: 1-888-619-9992