Assemble Instruction

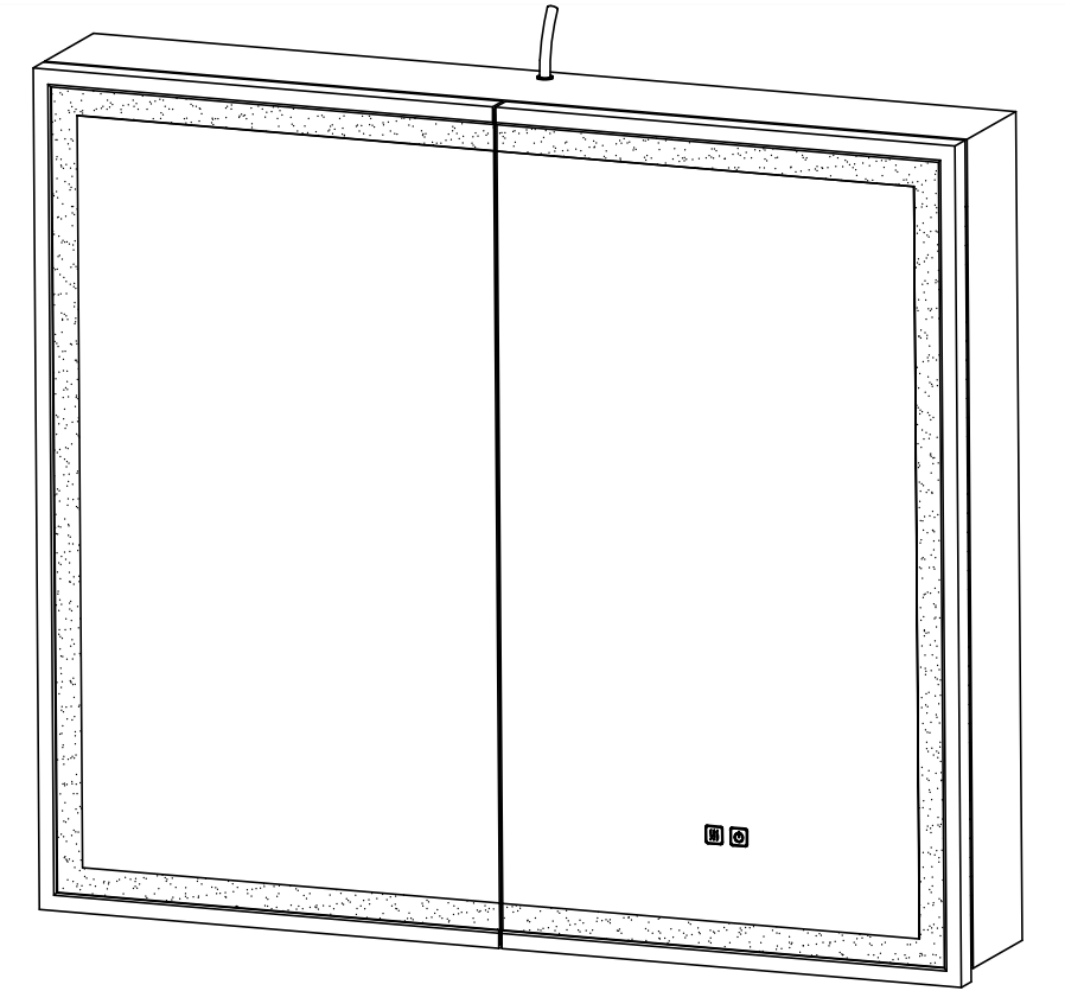

LED Mirror Cabinet

BPS635HE

Thank you for purchasing this product. If you have any questions, please contact our customer service department. We are always willing to help you.

Important Notices:

1. Please make sure all parts are included. When taking all parts out, please put them on a soft surface to prevent scratches.
2. As this product is made of iron, the edges and corners are sharp, please protect yourself from scratching during installation.
3. When working at height, please choose a safe platform to operate.
4. Please make sure there are no hidden cables or pipes before drilling.
5. Wear a pair of safety goggles when drilling.
6. Be careful when using power tools near water.
7. The product is manufactured according to Class I and the circuit needs to be grounded (see wiring diagram).
8. The main power supply must be turned off before electrical installation.
9. If the power supply only needs two wires, it can be adjusted to an ungrounded circuit.
10. This product is only for indoor use.
11. Electrical components should not be in touch with the moisture.

Wall Types:

1. Fixtures provided are usually used for solid walls.
2. If mount it on a tile, please use a ceramic drill and insert a wall plug under the tile.

Accessorize includes:

Typ	Draw	Number	Name
1	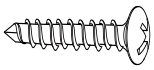	4PCS	Mental screws
2		4PCS	Rubber plug screws
3	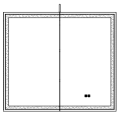	1PC	Mirror cabinet (with wire)

Tools needed:

5 6 7 8 9

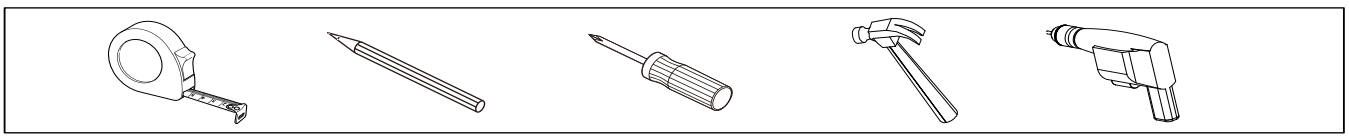

Installation Steps:

1. **Determine installation location**

Please mark the hole location on the wall according to the hole spacing on the back of the wall cabinet. Then, drilling the hole according to the mark location and install the glue plug screw into the holes. Please install at least 3 screws or more to make sure the wall cabinet is stable.

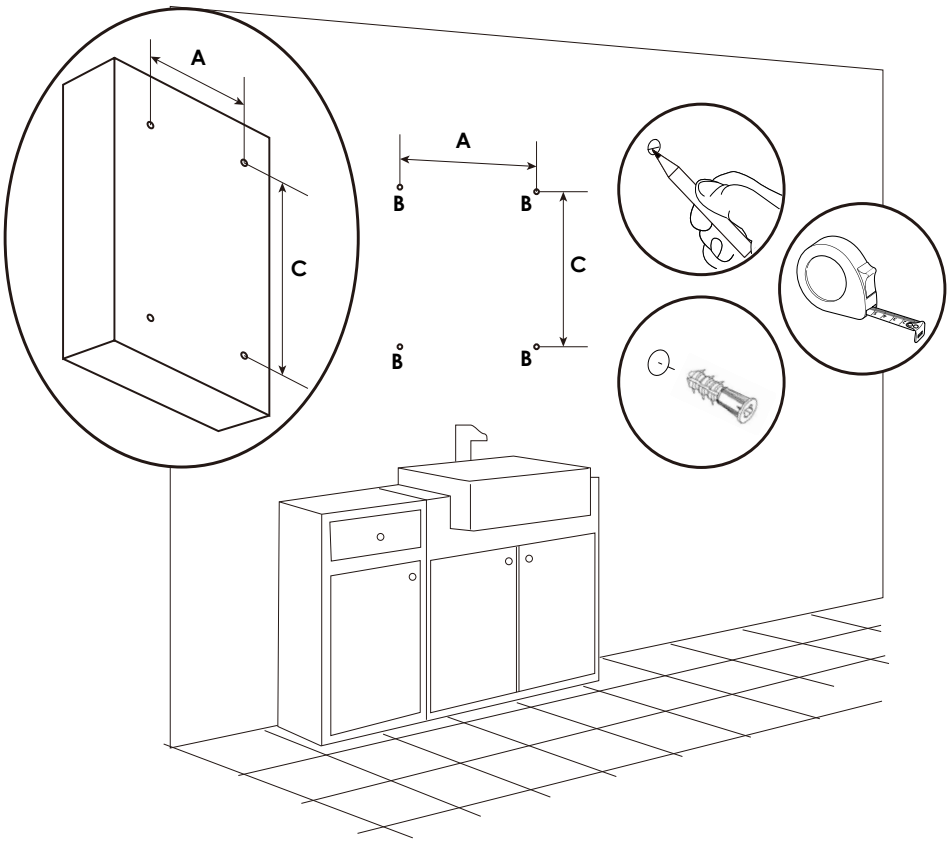

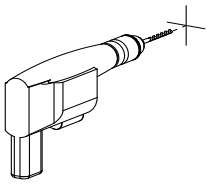

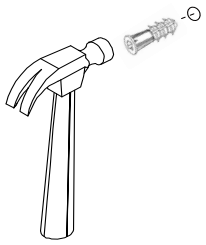

2	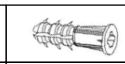	4PCS
5		1PC
6		1PC
8		1PC
9		1PC

2. **Install the cabinet**

Align the back hole of the wall cabinet with the glue plug screw on the wall, then turn the metal screw into the glue plug screw.

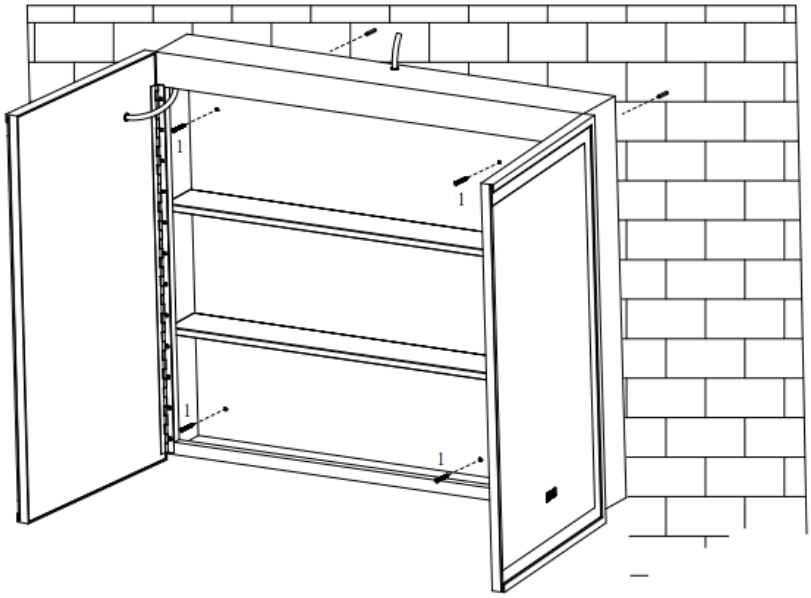

Note: When mounting to the wall, the wire can not be pressed between the cabinet and the wall, otherwise the wire installa-tion will be affected.

1		4PCS
7	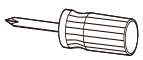	1PC

3. **Wiring Diagram**

NOTE: Wiring of any lights should be done by a qualified electrician and in accordance with National and Local Electrical Codes. Please buy a suitable plug to connect the wire if necessary.

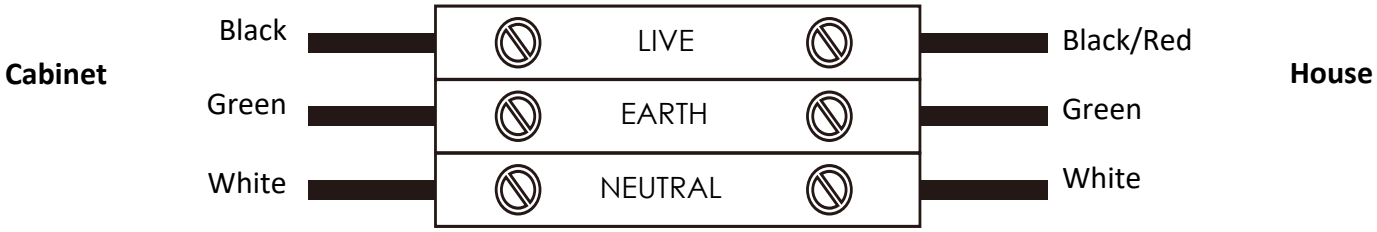

4. **Test:**

After the installation is completed, please test whether the LED light can be normally used. If not, please check whether the plug wire is successfully installed. Lights up with short press means installation is successful. If there is any problem, please contact the customer service.

The product's touch switch mode:

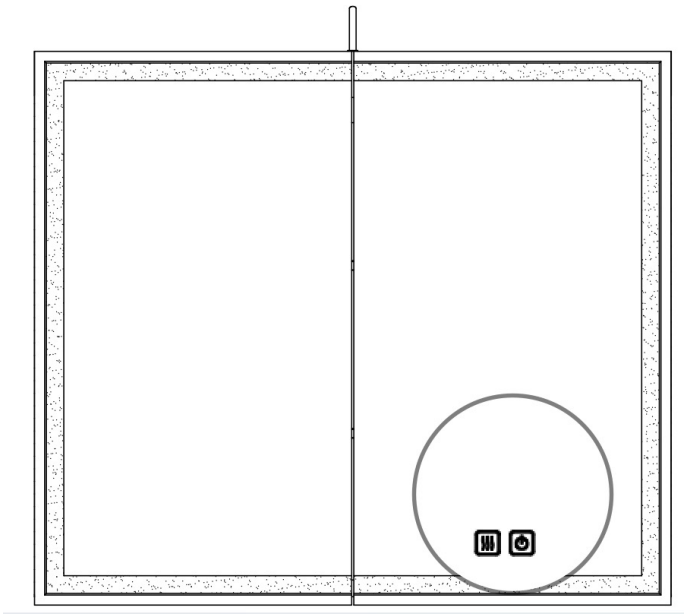

This button controls the defogger.

This button adjusts the lighting.

1. Single touch changes the light color.

2. Long press to adjust the brightness.

Door Adjustment :

NOTE: This step applies only if the cabinet's mirror doors (two or three doors mirror cabinet) are uneven by up to 0.5mm.

1)

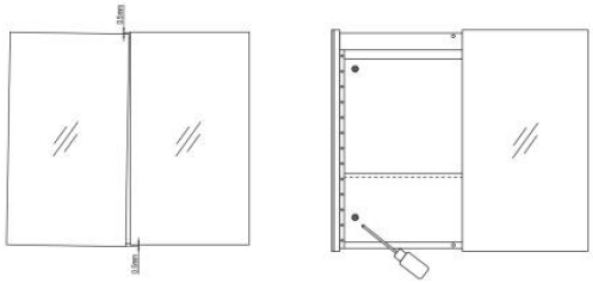

If the left door is lower than the right, slightly loosen the installation screws on the inclined door by 0.5-1mm.

2)

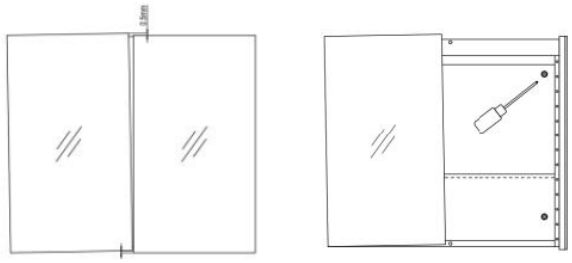

If the left door is higher than the right, slightly loosen the installation screws on the right door by 0.5-1mm.

3)

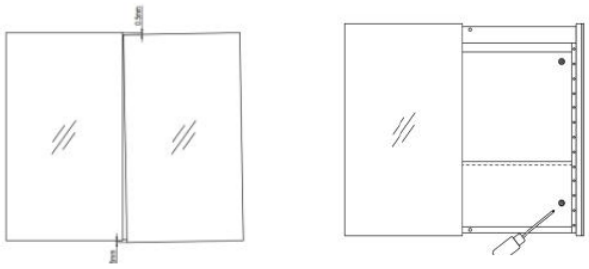

If the right door is lower than the left, slightly loosen the installation screws on the inclined door by 0.5-1mm.

4)

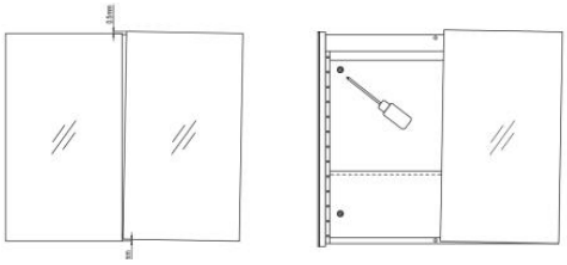

If the right door is higher than the left, slightly loosen the installation screws on the left door by 0.5-1mm.

Pay attention:

The wrong lifting method may cause the mirror cabinet door to not close tightly.

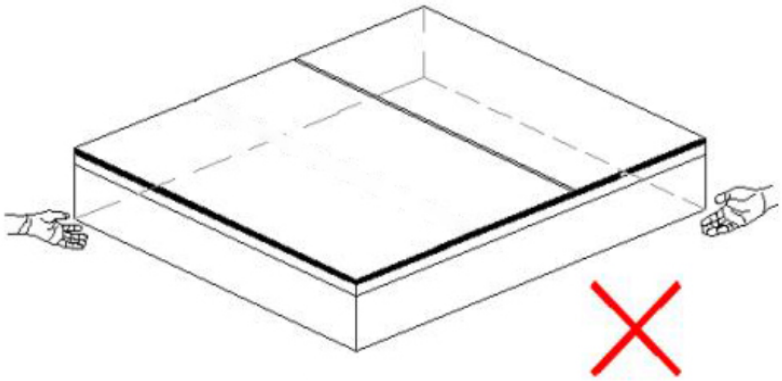

Do not lift diagonally

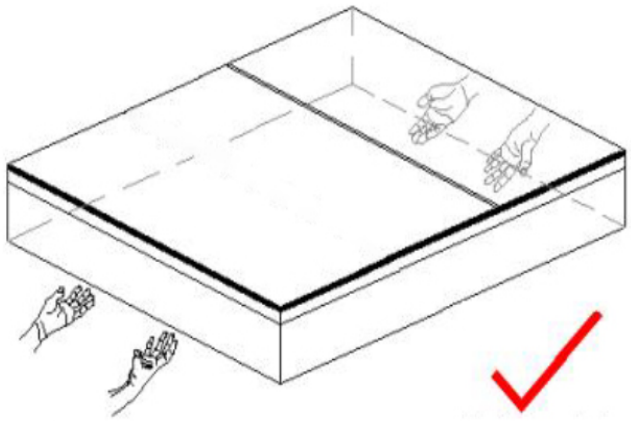

Please lift horizontally