SKU:
LX-TC7098T-HY-BL
LX-SB7098T-HY-BL01/02

L-Shaped Twin House Bed with Drawers
Assembly Instructions

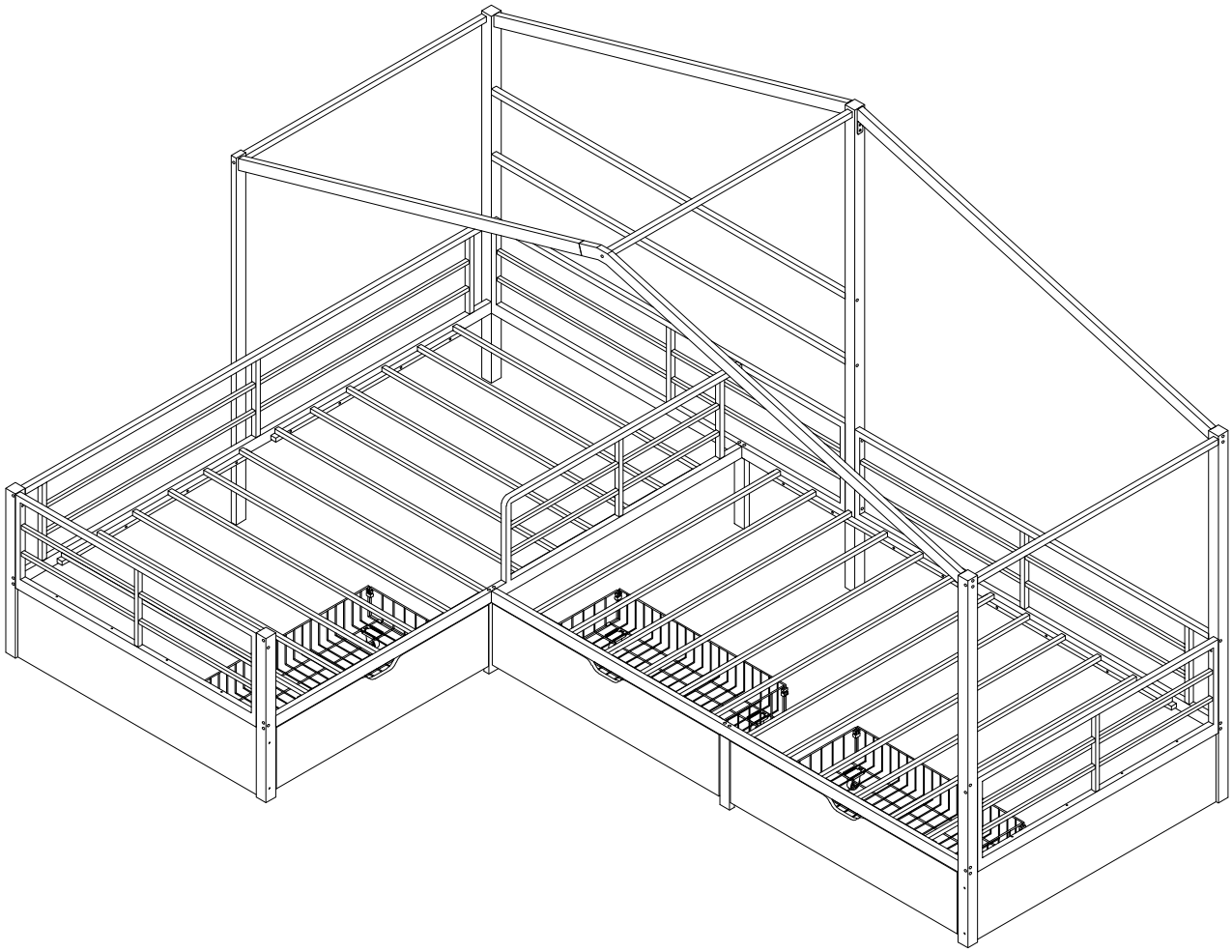

SAFETY WARNINGS AND GENERAL NOTES

• Adult assembly required.
• Check all bolts and screws periodically and retighten if needed.
• Do not allow jumping or rough play on the bed.
• Do not exceed weight capacity. (see product specifications)
• Mattress must fit securely within the frame.
• Always secure the bed to the wall using the anti-tip kit.
• Use the recommended mattress size only.
• Keep small parts away from children during assembly.
• Place the bed on a flat, level surface.
• Do not hang ropes, cords, or other items from the frame.
• This product must be secured to a wall using the included anti-tip hardware. Failure to do so may result in serious injury or death.

Before Assembly:
·Check all parts and hardware against the parts list
·Leave all bolts slightly loose until the frame is fully assembled and aligned. Tighten all bolts during the final check.
·Assembly requires 2 adults
·Estimated assembly time: 1–2 hours

Recommended Mattress Size for Each Bed Frame:
Mattress Type: Standard Twin
Mattress Dimensions: 75" L x 38" W
Maximum Mattress Thickness: 6"

Bed Parts View

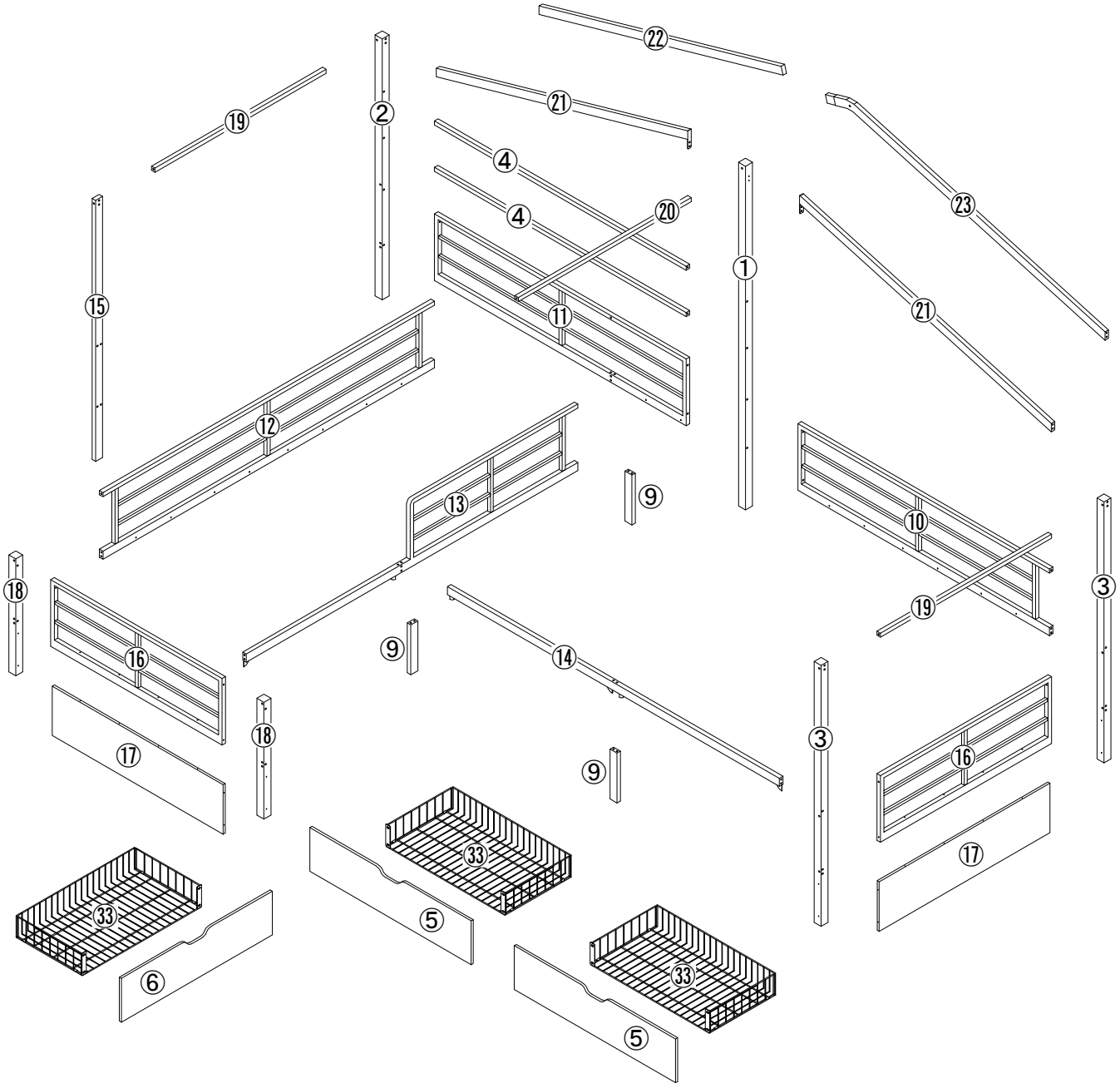

Assembly is recommended with 2 adults.

A power drill with a hex bit may be used at low speed only. Do not over-tighten. Final tightening should be done by hand to avoid damaging the hardware or frame.

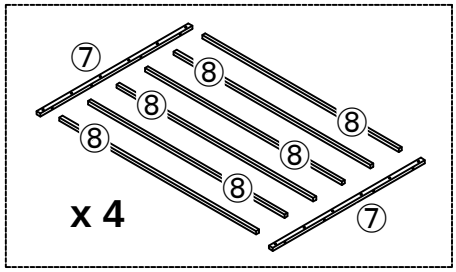

Part List

①-1pc	②-1pc	③-2pcs	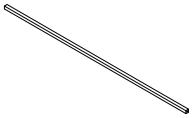 ④-2pcs	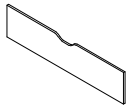 ⑤-2pcs
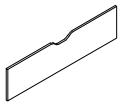 ⑥-1pc	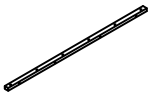 ⑦-8pcs	 ⑧-24pcs	 ⑨-3pcs	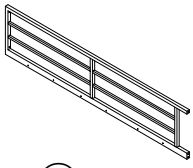 ⑩-1pc
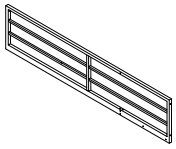 ⑪-1pc	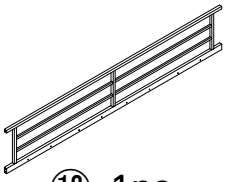 ⑫-1pc	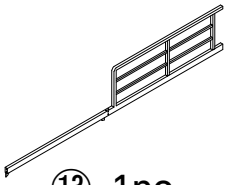 ⑬-1pc	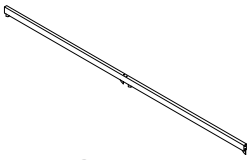 ⑭-1pc	⑮-1pc
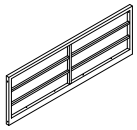 ⑯-2pcs	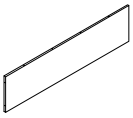 ⑰-2pcs	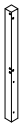 ⑱-2pcs	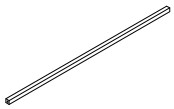 ⑲-2pcs	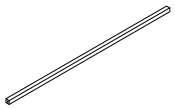 ⑳-1pc
 ㉑-2pcs	 ㉒-1pc	 ㉓-1pc	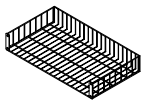 ㉝-3pcs	

Hardware List

 M8*60mm Ⓐ-33pcs	 M8*55mm Ⓑ-11pcs	 M8*35mm Ⓒ-8pcs	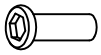 M8*15mm Ⓓ-7pcs	 M6*30mm Ⓕ-32pcs
 M6*25mm Ⓖ-48pcs	 M5*60mm Ⓘ-16pcs	 M6*35mm Ⓛ-4pcs	 M6*10mm Ⓜ-15pcs	 M8*75mm Ⓝ-2pcs
 M6*15mm Ⓞ-7pcs	 Ⓟ-3pcs	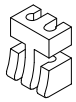 Ⓠ-6pcs	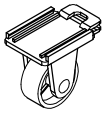 Ⓡ-12pcs	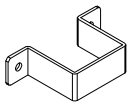 Ⓣ-2pcs
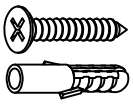 Ⓤ-4sets	 Ø13mm Ⓦ-4pcs			

Tool List

 M5mm Ⓔ-2pcs	 M4mm Ⓗ-1pc	 M3mm Ⓙ-1pc	 Attention: Please wear gloves during assembly

Step 1: Use Bolts A, B, D, N and O with Allen Keys E and H to connect #1, #2, #3, #4, #9, #10, #11 and #21 together.

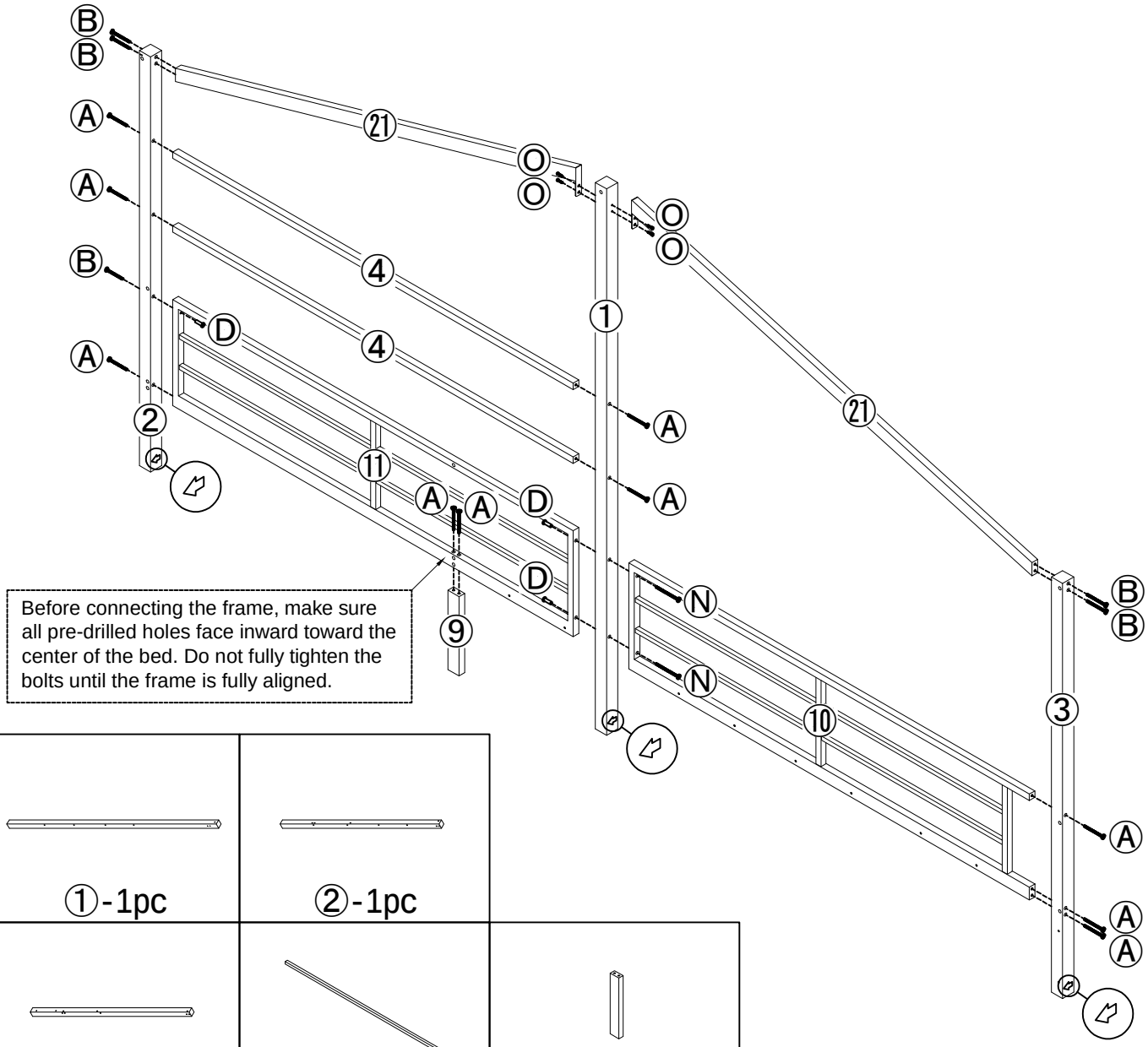

Before connecting the frame, make sure all pre-drilled holes face inward toward the center of the bed. Do not fully tighten the bolts until the frame is fully aligned.

①-1pc	②-1pc			
③-1pc	④-2pcs	⑨-1pc		
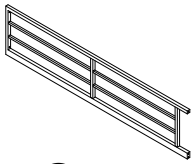 ⑩-1pc	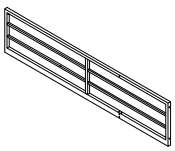 ⑪-1pc	 ㉑-2pcs	 M8*60mm Ⓐ-10pcs	 M8*55mm Ⓑ-5pcs
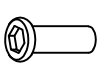 M8*15mm Ⓓ-3pcs	 M5mm Ⓔ-2pcs	 M4mm Ⓗ-1pc	 M8*75mm Ⓝ-2pcs	 M6*15mm Ⓞ-4pcs

Step 2: *Use Bolts A, B, and D with Allen Key E to connect parts #16 and #18 together.*

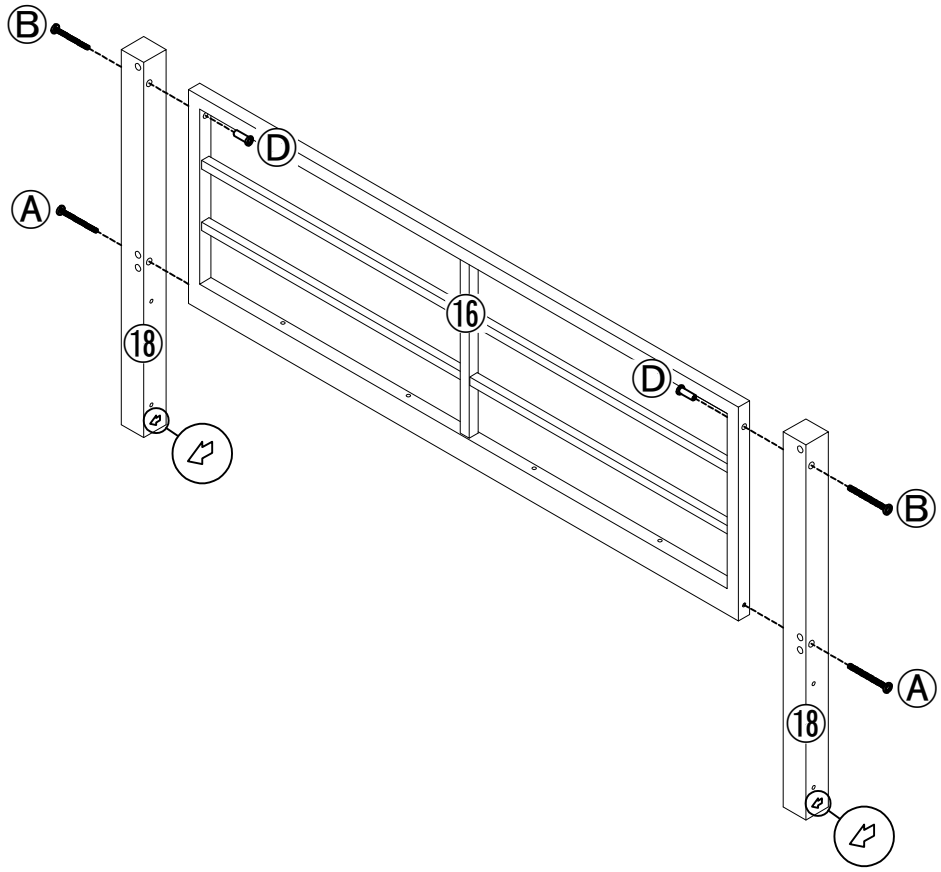

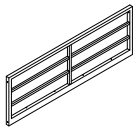 ⑯-1pc				
⑱-2pcs	 M8*60mm Ⓐ-2pcs	 M8*55mm Ⓑ-2pcs	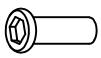 M8*15mm Ⓓ-2pcs	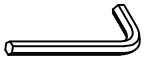 M5mm Ⓔ-2pcs

Step 3: Use Bolts A and C with Allen Key E to connect #9, #12 and #13 to the assembled side frames.

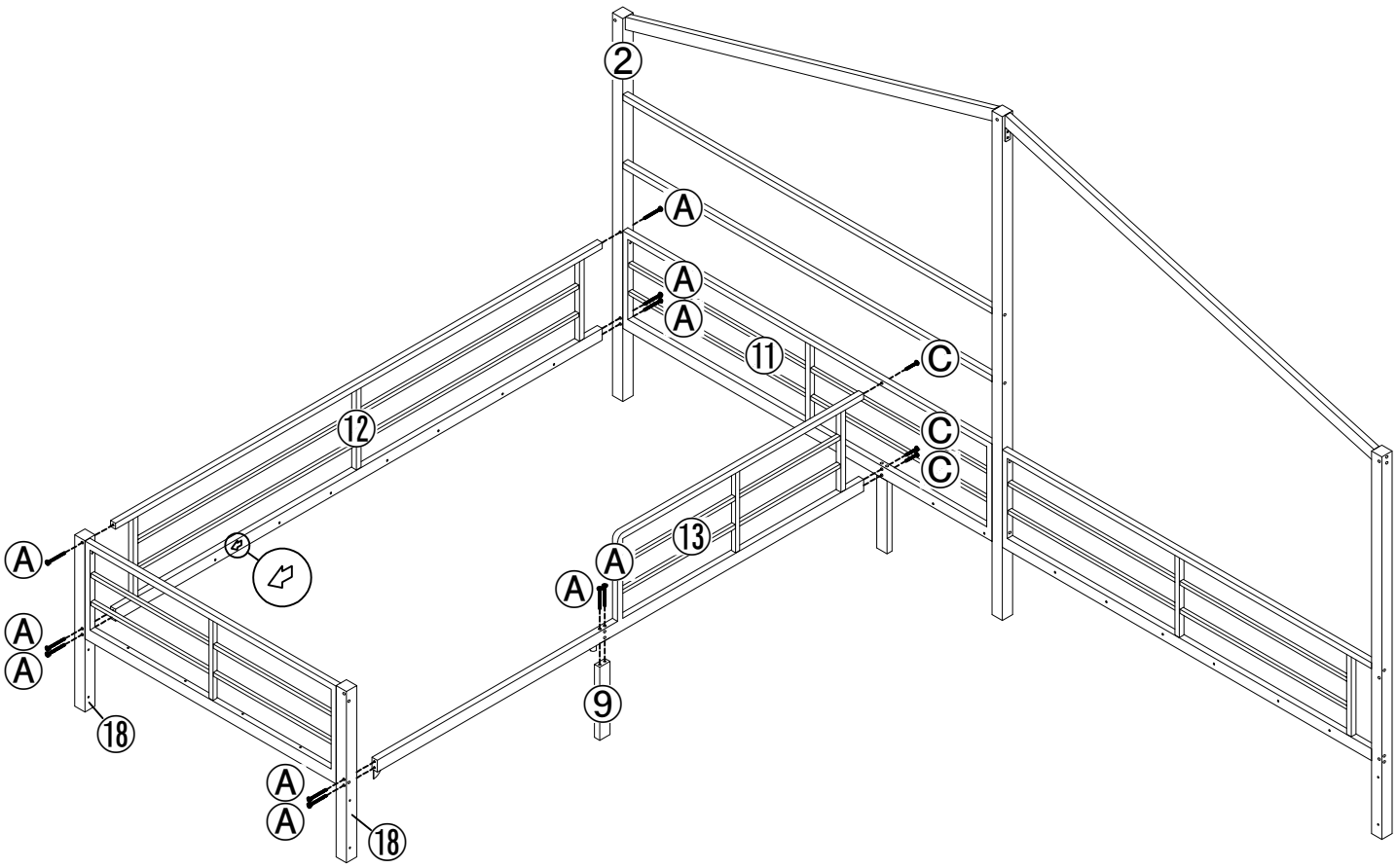

 ⑨-1pc				
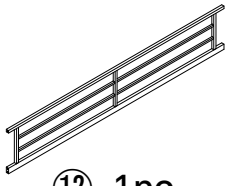 ⑫-1pc	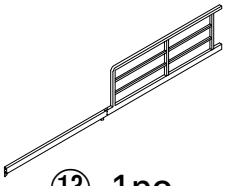 ⑬-1pc	 M8*60mm Ⓐ-10pcs	 M8*35mm Ⓒ-3pcs	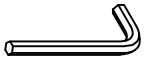 M5mm Ⓔ-1pc

Step 4: Use Bolts A, B, and D with Allen Key E to connect parts #3, #16, and #19 to the assembled bed frame.

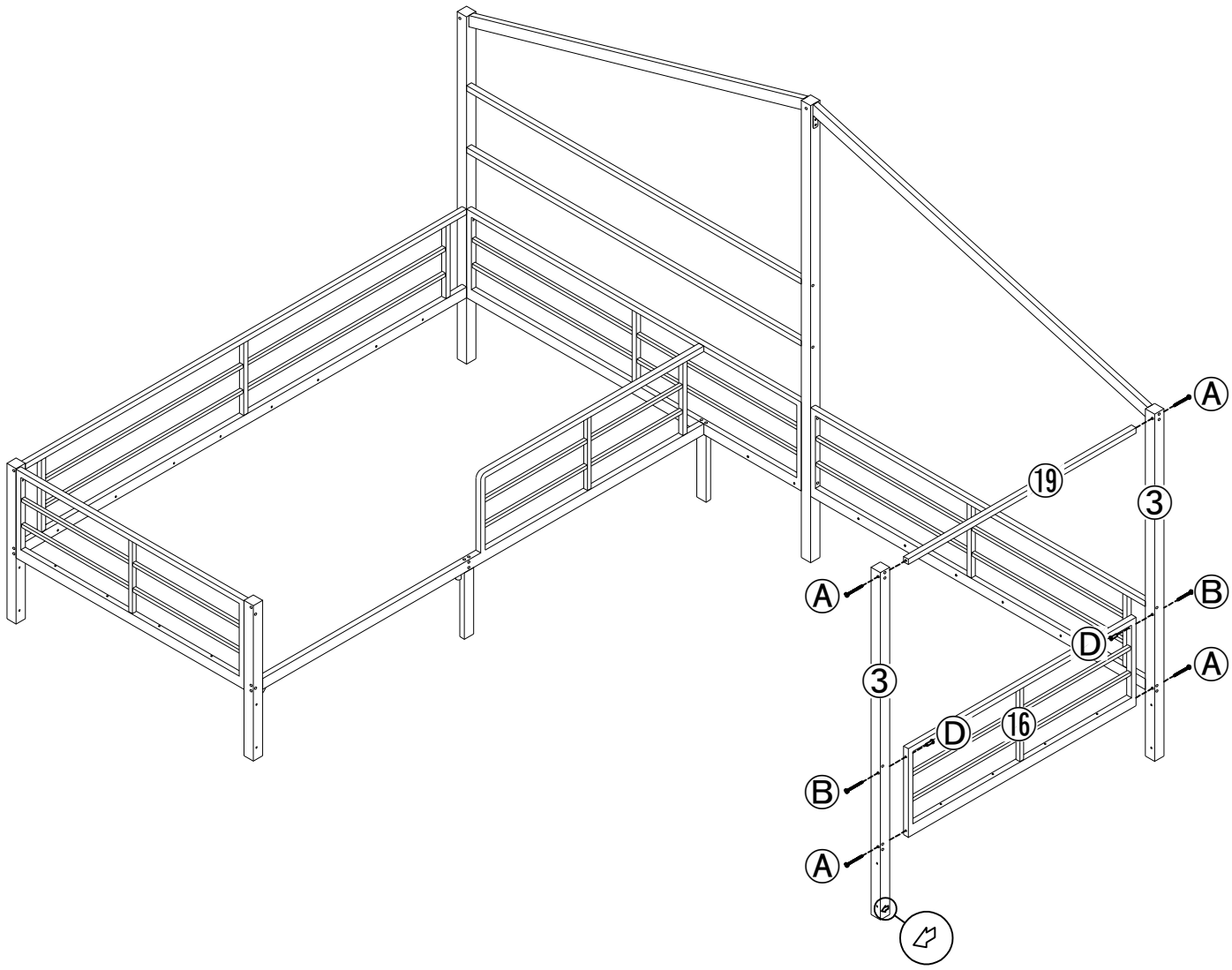

③-1pc	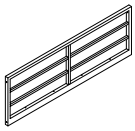 ⑯-1pc			
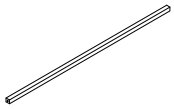 ⑲-1pc	 M8*60mm Ⓐ-4pcs	 M8*55mm Ⓑ-2pcs	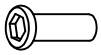 M8*15mm Ⓓ-2pcs	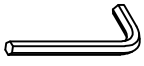 M5mm Ⓔ-2pcs

Step 5: Use Bolts A and C with Allen Key E to connect #9 and #14 to the assembled bed frame.

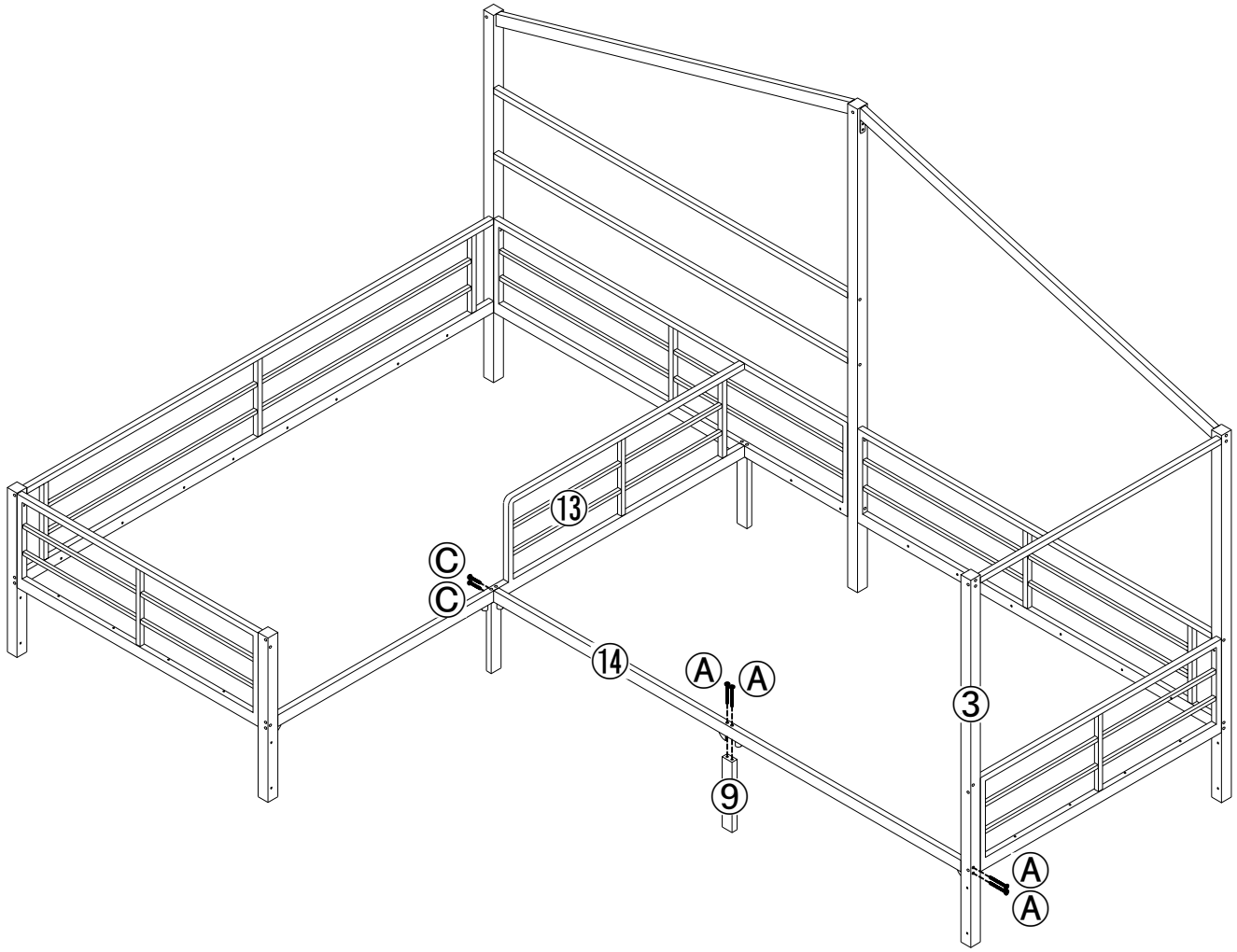

	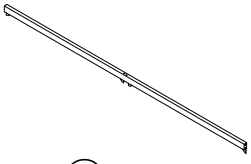			
⑨-1pc	⑭-1pc	M8*60mm Ⓐ-4pcs	M8*35mm Ⓒ-2pcs	M5mm Ⓔ-1pc

Step 6: Use Bolts A and L with Allen Keys E and H to connect #15 and #19 to the assembled bed frame.

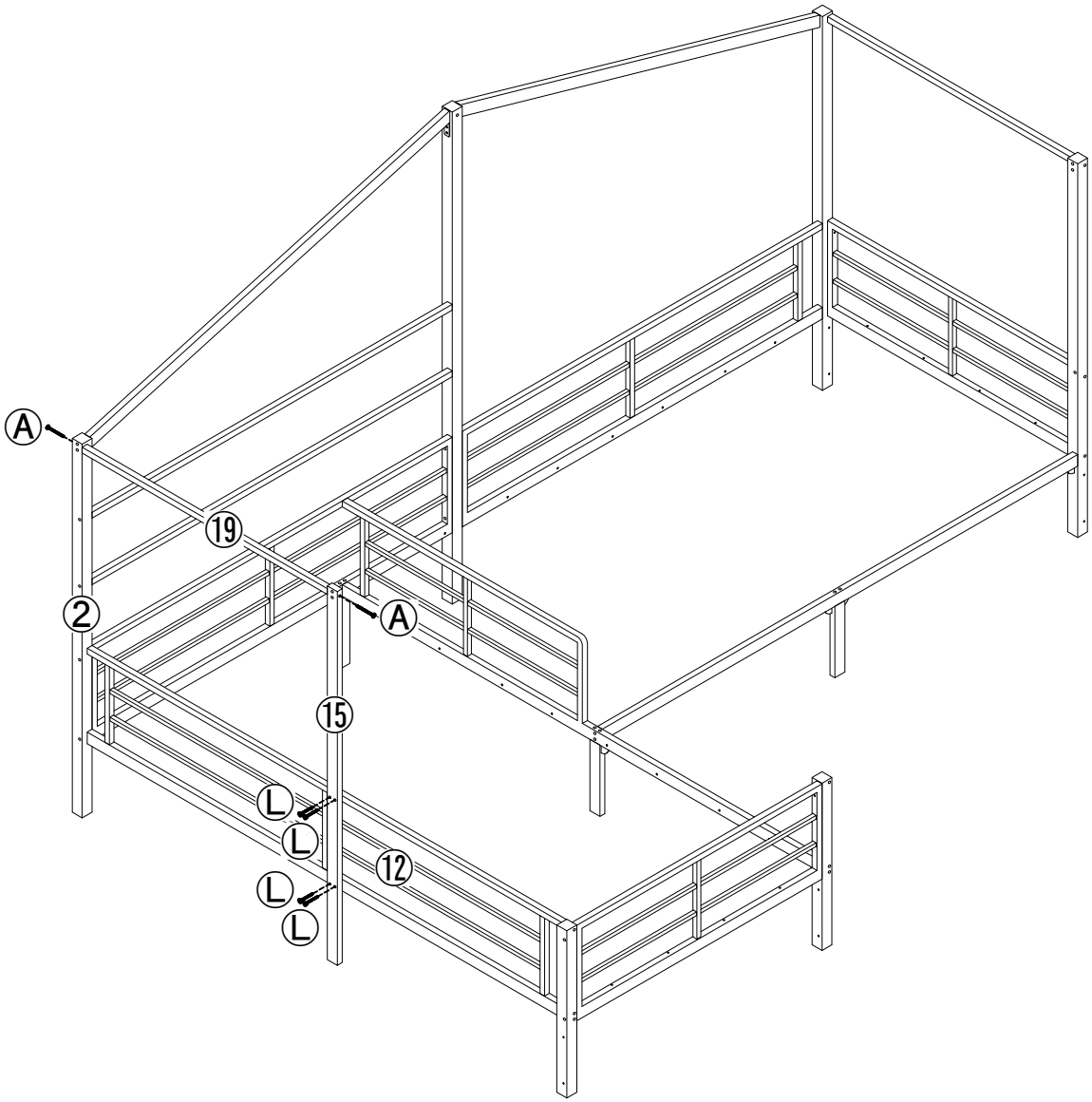

⑮-1pc				
⑲-1pc	M8*60mm Ⓐ-2pcs	M5mm Ⓔ-1pc	M4mm Ⓗ-1pc	M6*35mm Ⓛ-4pcs

Step 7: Use Bolts O with Allen Key H to connect #22 and #23 together.

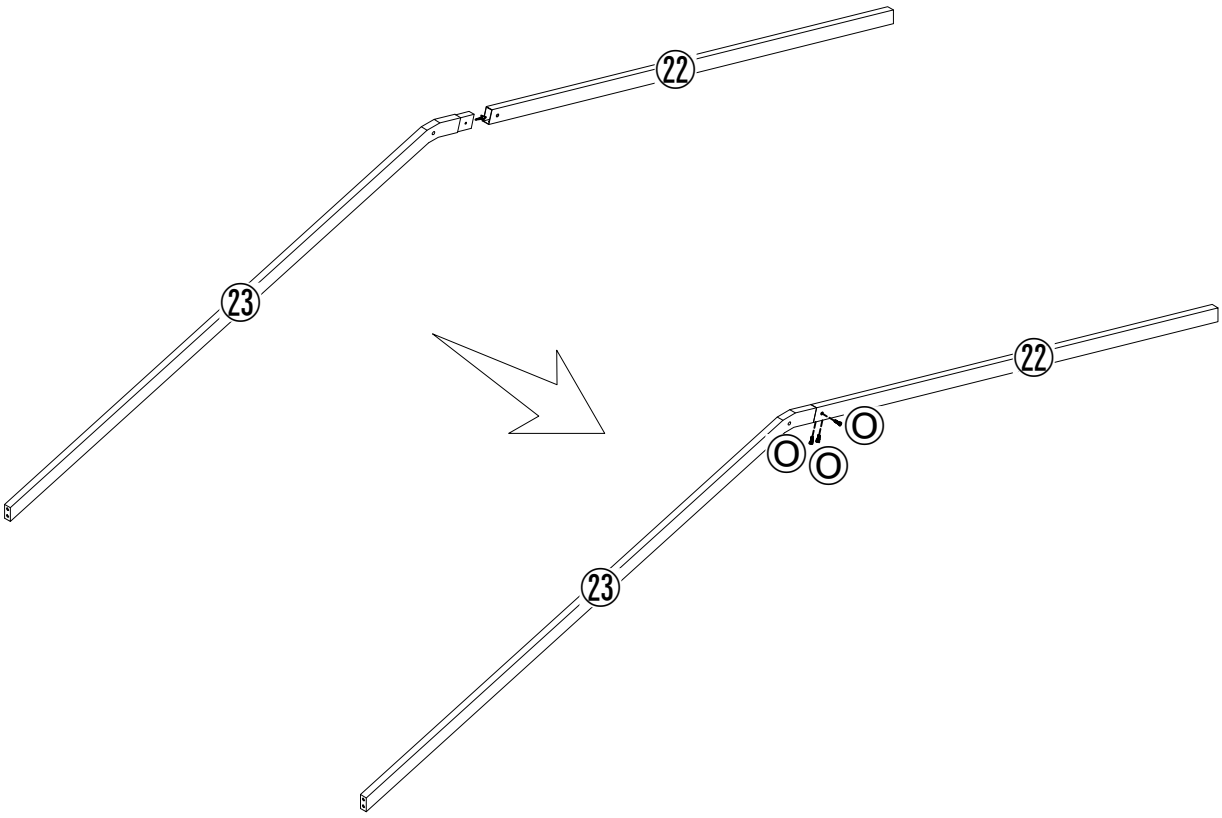

			
㉒-1pc	㉓-1pc	M4mm Ⓗ-1pc	M6*15mm Ⓞ-3pcs

Step 8: Use Bolts A, B and C with Allen Key E to connect #20, #22 and #23 to the assembled bed frame.

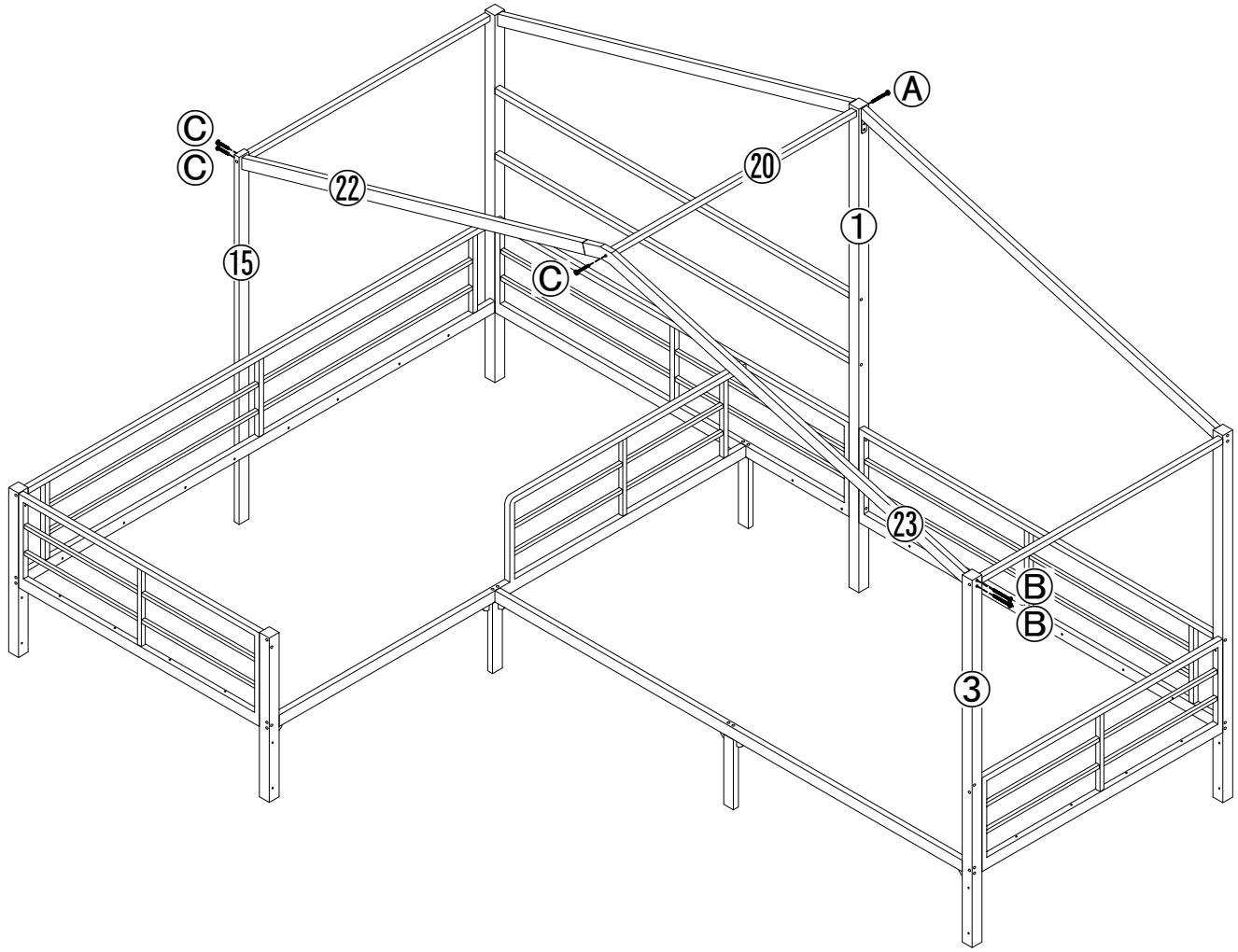

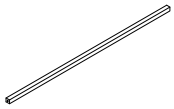				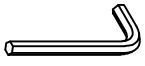
⑳-1pc	M8*60mm Ⓐ-1pc	M8*55mm Ⓑ-2pcs	M8*35mm Ⓒ-3pcs	M5mm Ⓔ-1pc

Step 9: Use hardware I with Allen Key J to attach parts #17 to the assembled bed frame.

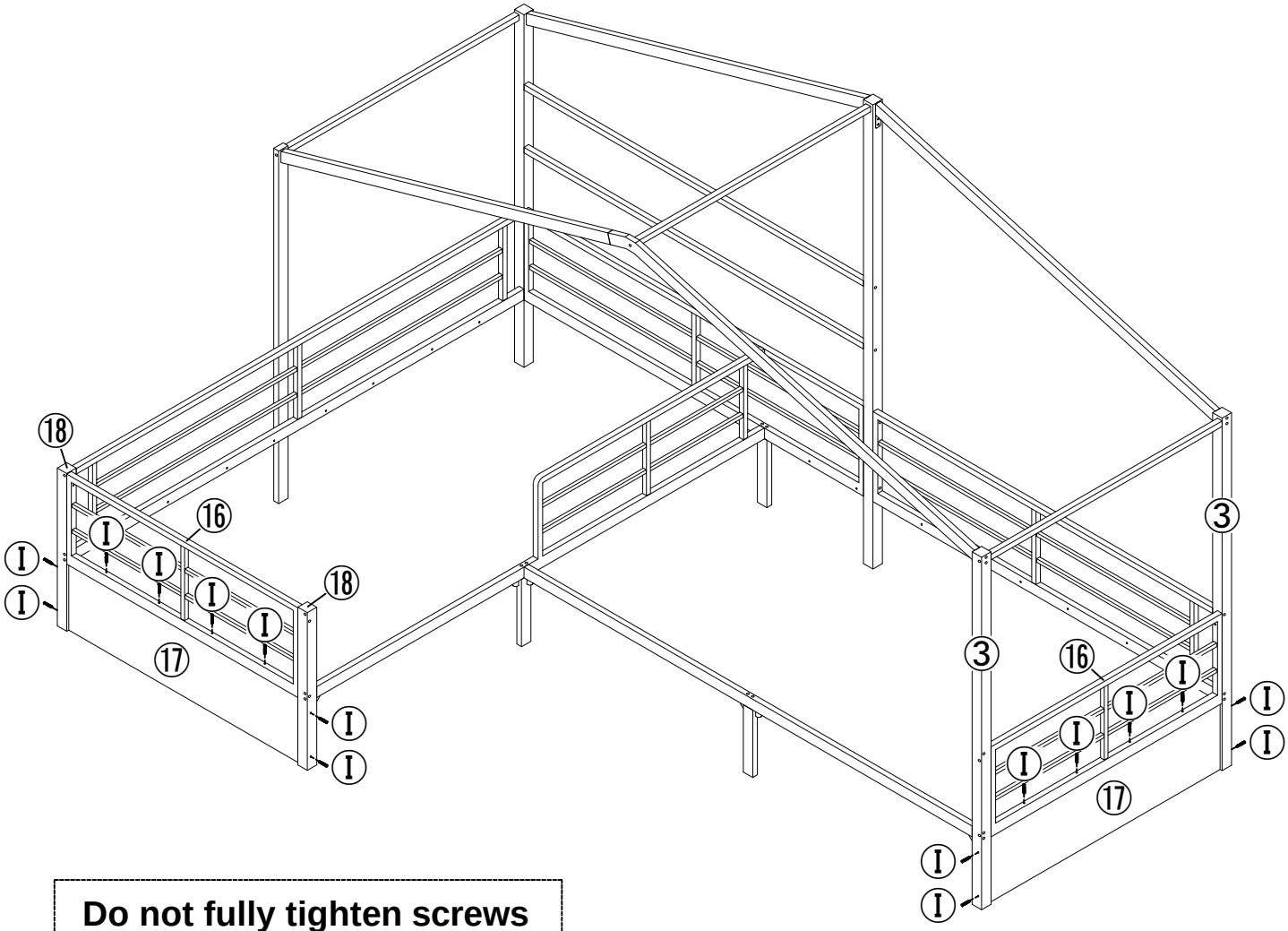

Do not fully tighten screws at this stage. Leave them slightly loose until all parts are aligned. Fully tighten during the final step.

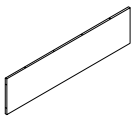		
⑰-2pcs	M5*60mm Ⓘ-16pcs	M3mm Ⓙ-1pc

Step 10: Use hardware G with Allen Key H to connect parts #7 and #8 together.

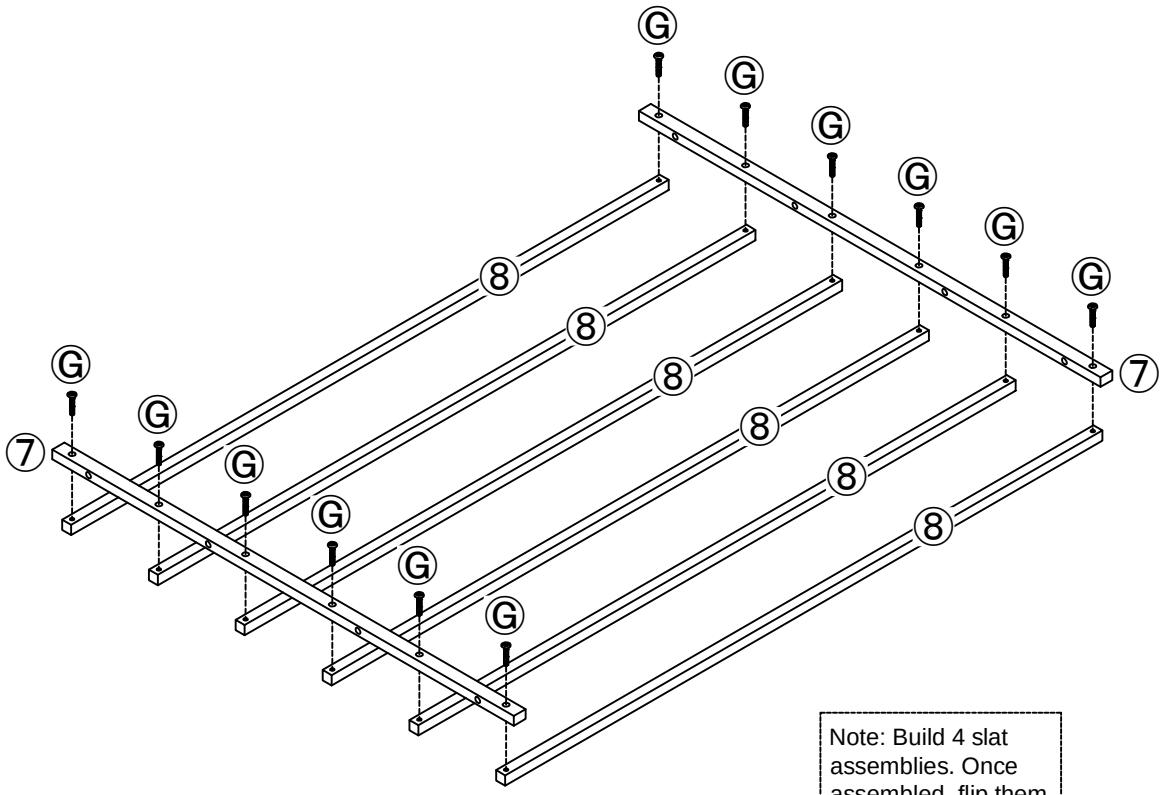

Note: Build 4 slat assemblies. Once assembled, flip them over for installation.

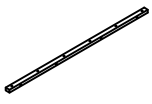		 M6*25mm	 M4mm
⑦-8pcs	⑧-24pcs	Ⓖ-48pcs	Ⓗ-1pc

Step 11: Install the four slat assemblies from Step 10 onto the bed frames using hardware F and Allen Key H. Do not step on the slats until the mattress is in place.

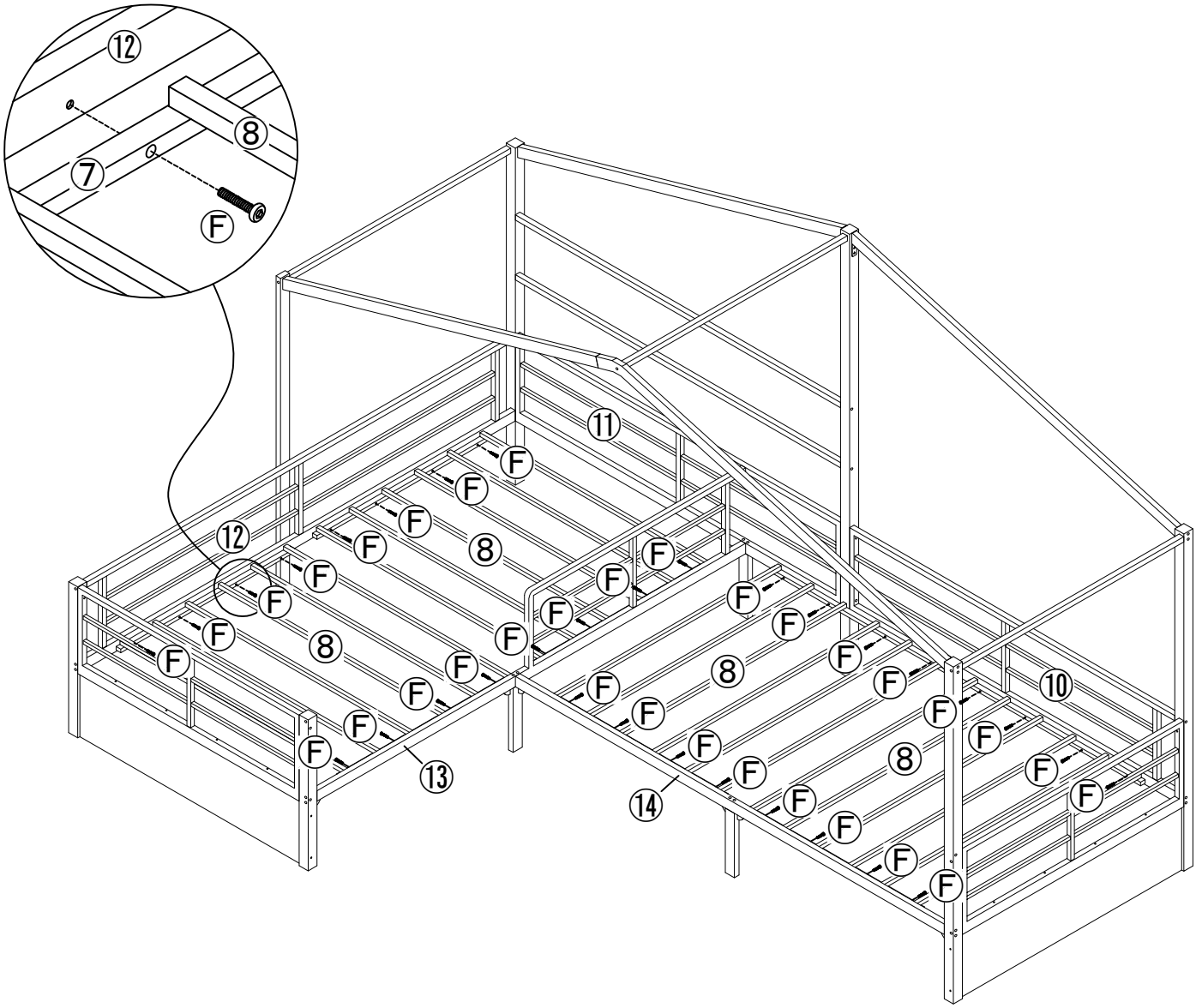

 M6*30mm Ⓕ-32pcs	 M4mm Ⓗ-1pc

Step 12: Build 3 drawer assemblies. Attach one front panel to each drawer basket #33 using hardware M, P, Q and R with Allen Key H. Use two #5 front panels and one #6 front panel as shown in the diagram. Make sure all casters face downward and roll smoothly before use.

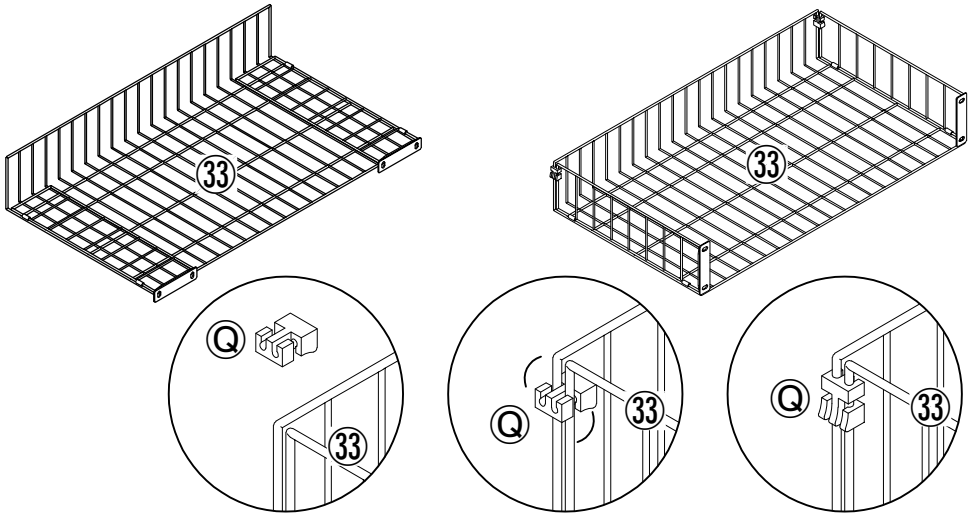

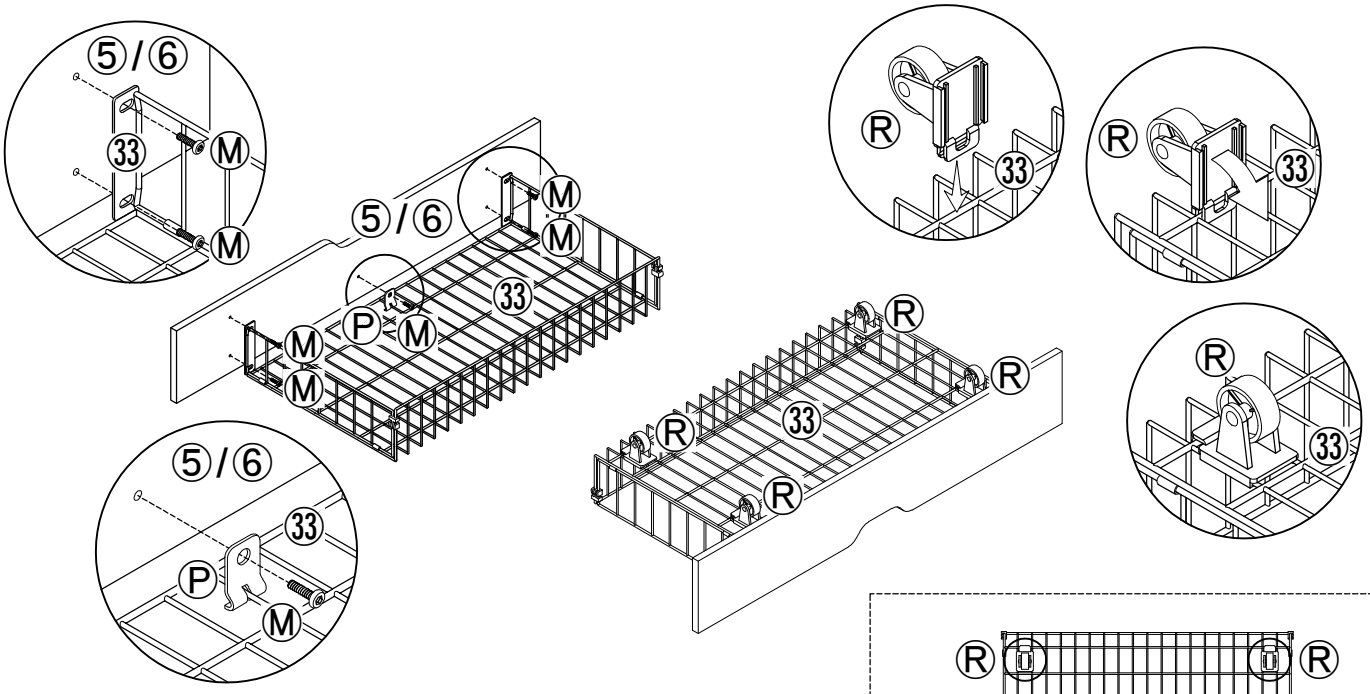

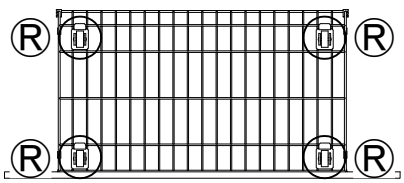

Install the casters on the bottom corners of each drawer as shown. Make sure all wheels face downward and roll smoothly before use.

⑤-2pcs	⑥-1pc	㉝-3pcs

M4mm Ⓗ-1pc	M6*10mm Ⓜ-15pcs	Ⓟ-3pcs	Ⓠ-6pcs	Ⓡ-12pcs

Step 13: Insert the drawers with the wheels facing down and the front panels facing outward. Place drawer front #6 in the center position and drawer fronts #5 on the left and right sides, as shown. Attach Cover W as shown.

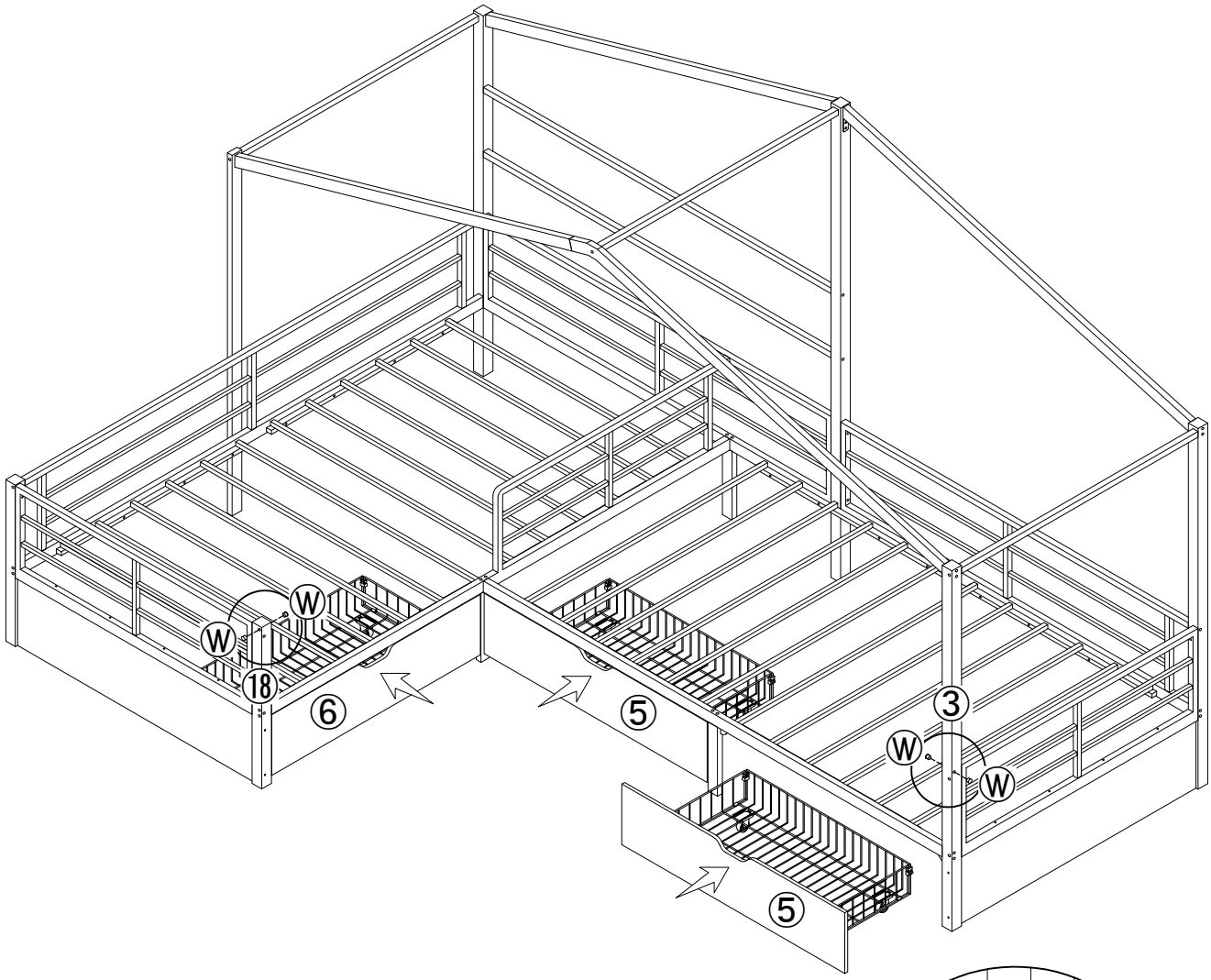

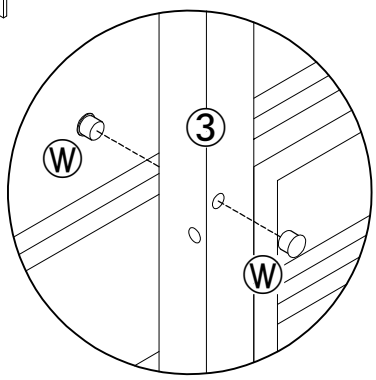



Ø13mm

Ⓦ-4pcs

Step 14: Secure the bed to the wall using anti-tip hardware T and U before use. Do not use the bed until the anti-tip hardware has been properly installed. For best results, attach the anti-tip brackets to wall studs when possible. If mounting to drywall, masonry, or another wall type, use anchors suitable for that wall material. If you are unsure, consult a qualified professional.

Final Check Before Use:

· All bolts and screws are fully tightened.

· The bed is secured to the wall with anti-tip hardware.

· All slat panels are fully secured to the bed frames.

· All drawers are installed correctly and slide smoothly.

· The correct mattress is placed on each bed frame.

· Do not step on the slats without a mattress in place.

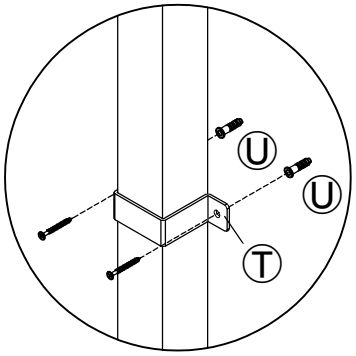

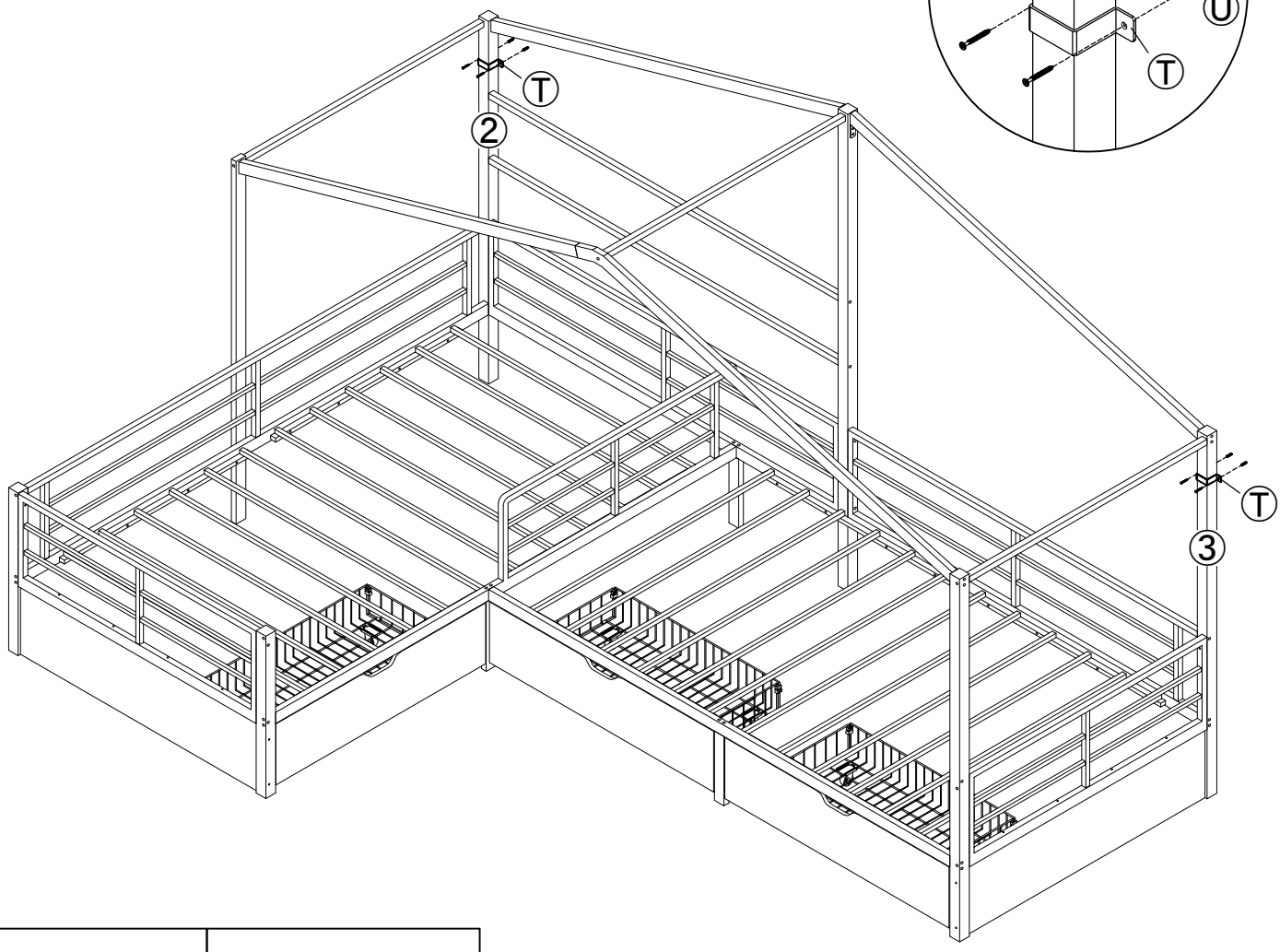

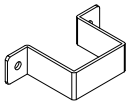	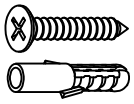
Ⓣ-2pcs	Ⓤ-4sets