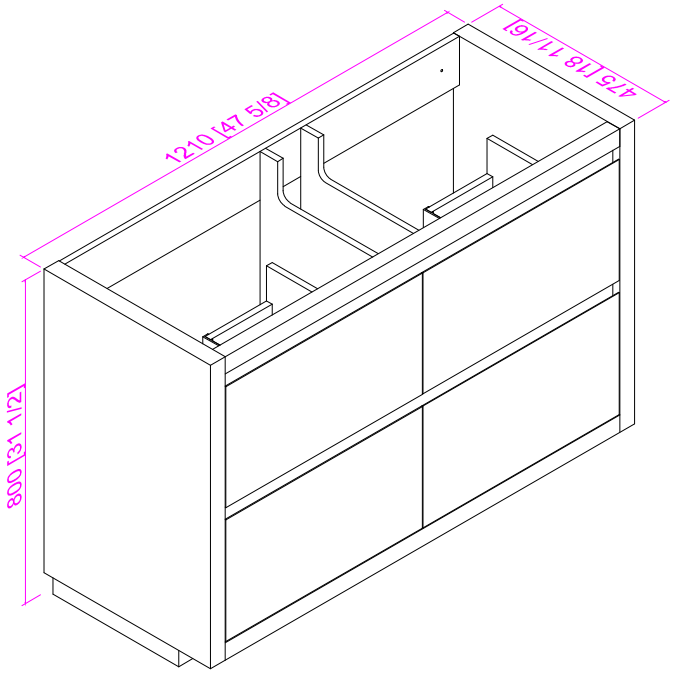
1210 [47 5/8]
475 [18 11/16]
800 [31 1/2]

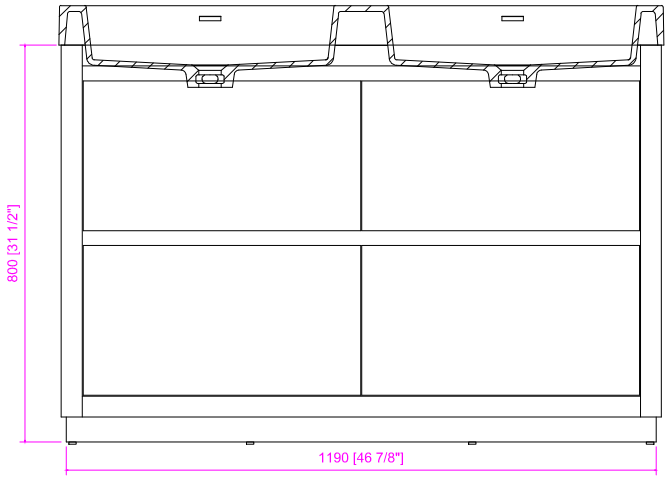
800 [31 1/2]
1190 [46 7/8]

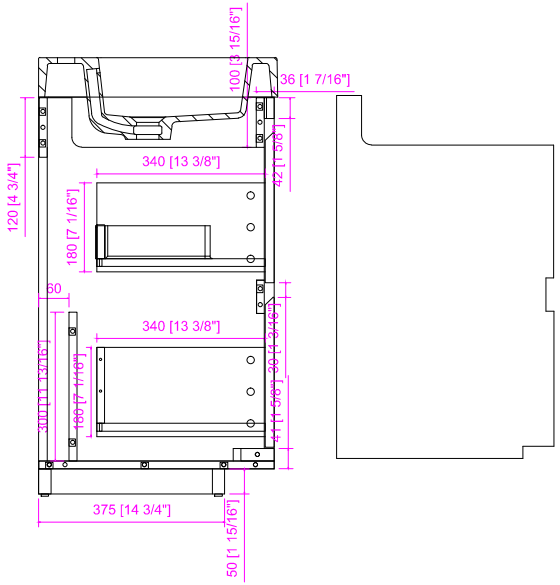
100 [3 15/16]
36 [1 7/16]
42 [1 5/8]
340 [13 3/8]
120 [4 3/4]
180 [7 1/16]
60
340 [13 3/8]
300 [11 13/16]
180 [7 1/16]
36 [1 3/16]
41 [1 5/8]
375 [14 3/4]
50 [1 15/16]

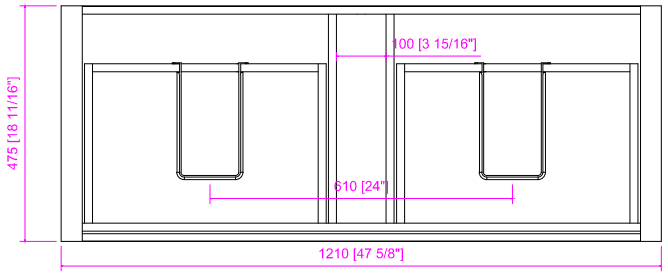
100 [3 15/16]
475 [18 11/16]
610 [24]
1210 [47 5/8]

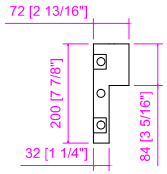
72 [2 13/16]
200 [7 7/8]
32 [1 1/4]
84 [3 5/16]

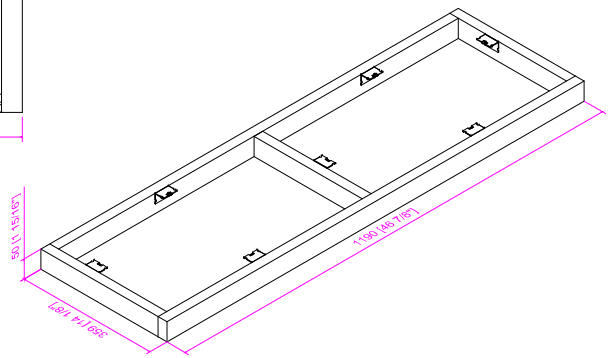
53 [2 1/8]
1190 [46 7/8]
389 [14 1/8]